TEST SET
TRC 319-2

OPERATOR'S HANDBOOK

TEST SET
TRC 319-2

OPERATOR'S HANDBOOK

THOMSON-CSF

DIVISION TELECOMMUNICATIONS

66, RUE DU FOSSE BLANC · BP 59 · 92231 · GENNEVILLIERS

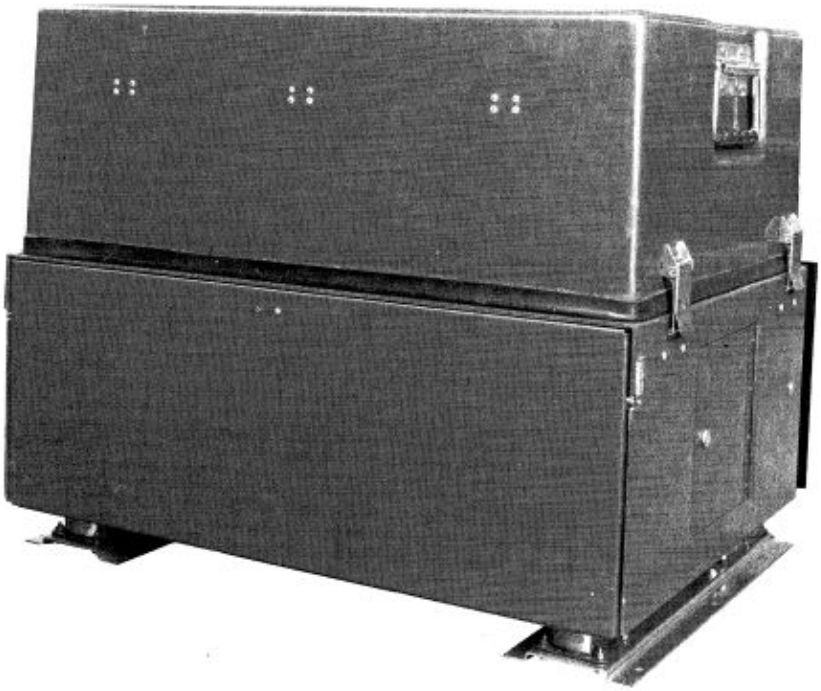

Fig. 1.1a – General view

Fig. 1.1b – View, cover without

SECTION 1

GENERAL

1-1 - Purpose of Test Set TRC 319 (Fig. 1-1)

Test set TRC 319-2 has been designed to facilitate fault detection in the MAN-PACK transceiver system and the vehicle-mounted station associated with such transceiver.

The faulty sub-assembly (module or PC board) is detected, using a test sequence which is dealt with in para. 1-4.

This operator's guide deals with the test procedures when using the test bench, i.e. :

Test A	: Man-Pack Functionnal	Section 2	
Test B	: Man-Pack Diagnostic (open)	Section 3	
Test C	: Power Supply ALT 113	Section 4	Not included in the edition
Test D	: 100 W amplifier AMP 102	Section 5	
Test E	: 100 W A.T.U. AEA 113	Section 6	
Test F	: Power Supply/Amplifier ALA 101	Section 7	
Test G	: 20 W Power Supply ALT 111 and E/R 300	Section 8	
Test H	: 20 W ATU Vehicle AEA 112	Section 9	

The specifications and technical data relating to the operation of test unit TRC 391-2 are dealt with in a seperate technical manual.

1-2 - Details of a Collective Unit (Fig. 1-2)

Nr	Designation	Reference TH-CSF	Qty
1	Test set consist of :	16 561 000	1
W01	Power supply cable	16 566 321	1
W02	100 W A.T.U. cable	16 414 242	1
W03	100 W amplifier cable	16 566 323	1
W04		16 566 324	1
W05	P.S.U. cable	16 566 325	1
W06*	Coaxial adapter cable	16 566 326	1
W07	Coaxial cable	16 566 327	1
W08		16 566 328	1
W09	Man-Pack battery cable	16 566 329	1
W10	Man-Pack cable	16 566 330	1
W11	20 W vehicle power supply cable	16 414 243	1
2	Man-Pack dummy aerial 20 W	16 562 326	1
3	100 W A.T.U. dummy aerial	16 562 131	1
4	Operator's guide		1
5	Tool bag (screw driver, coaxial adapter plug, spanner. . .) LR 319-20	16 889 079	1
6	Adapter (830) for ALA 101	16 569 913	1
7	Antenna 20 W vehicle adapter unit	16 890 097	1
8	Power supply 20 W vehicle adapter unit	16 890 091	1

* Included in tool kit (LR [illegible] Nr 5

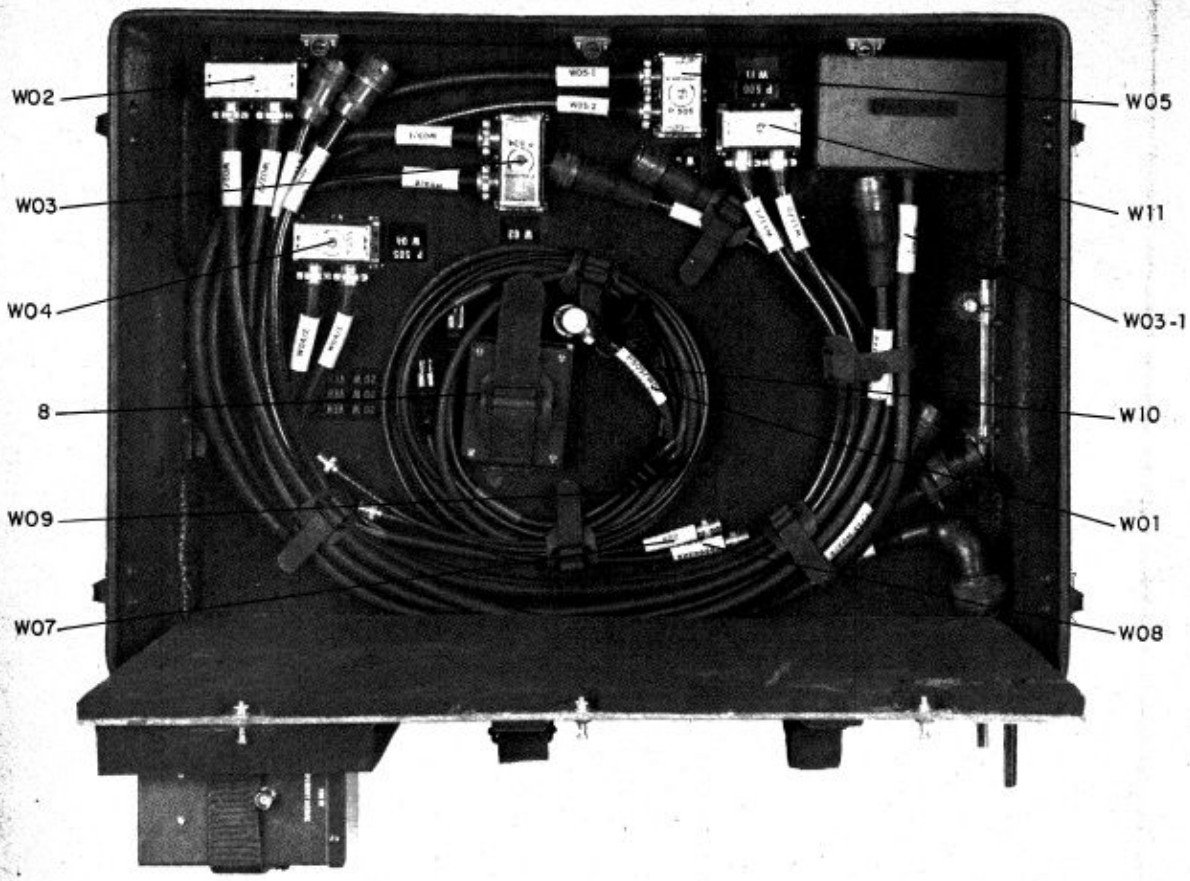

Fig. 1-2a

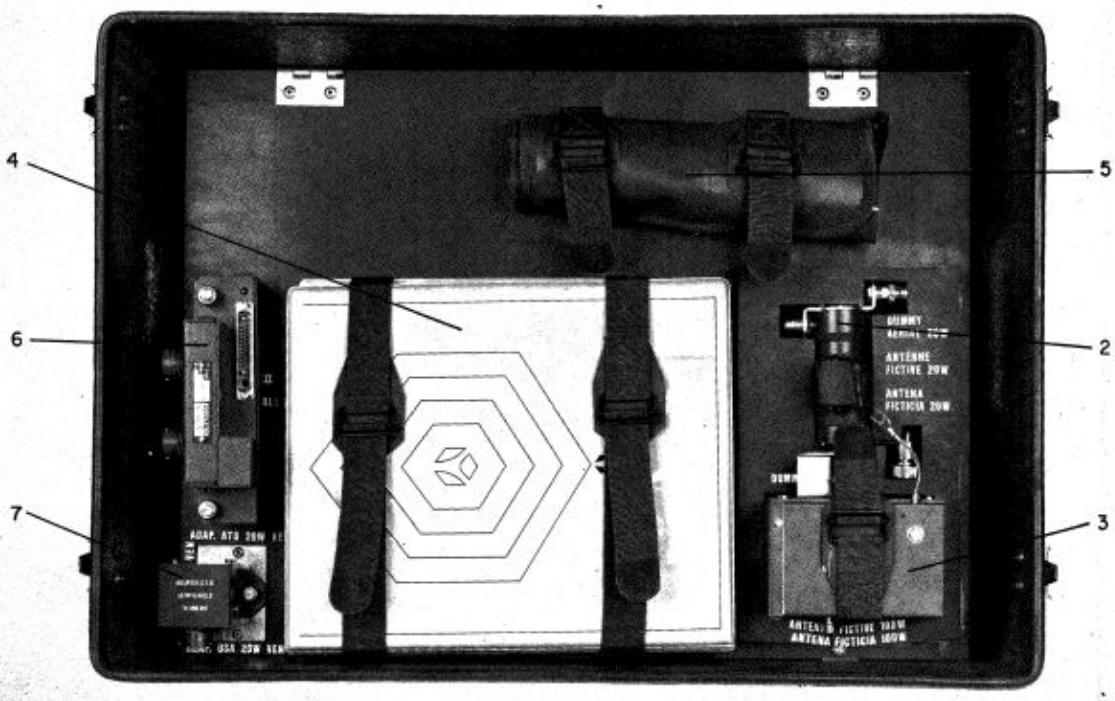

Fig. 1-2b

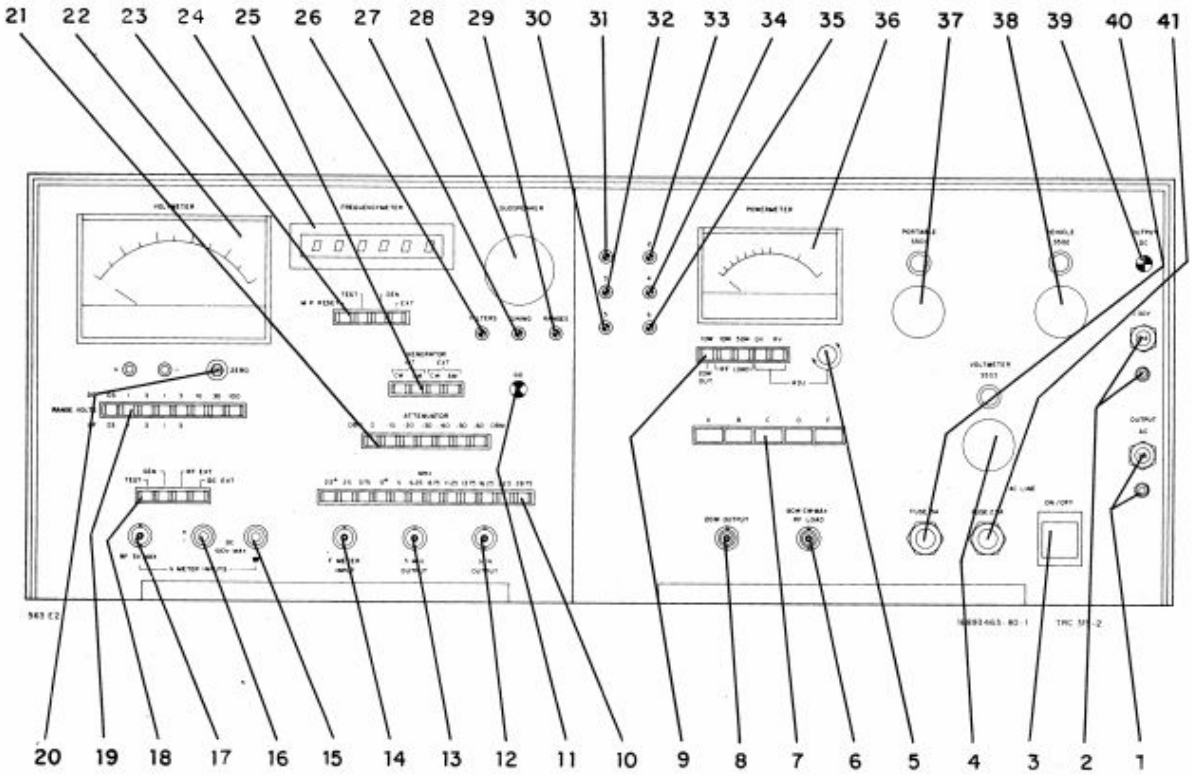
21 22 23 24 25 26 27 28 29 30 31 32 33 34 35 36 37 38 39 40 41
20 19 18 17 16 15 14 13 12 11 10 9 8 7 6 5 4 3 2 1

Fig. 1-3

1-3 - Starting-up Operations and Verification of the Test Set (Fig. 1-3)

1-3-1 - Remove the test set upper cover and inventorize the cables and accessories located inside the cover, if need be (see para. 1-2).

1-3-2 - Set the ON/OFF switch to (item 3) to OFF.

1-3-3 - Open the access door located on the test set right-hand side panel and connect cable W01 to receptacle J509. Connect the other end of cable W01 to the 220 V, 50 Hz mains (output current $\simeq$ 2 A).

1-3-4 - Set the ON/OFF switch (item 3) to ON. Check for lighting of the GO indicator lamp (item 11).

1-3-5 - Set selector 23 to EXT. The reading off the frequency meter (item 24) should be 000000.

1-3-6 - Test the supply voltages of the test set as follows :

a) - Set the voltmeter selector (item 18) to TEST.
b) - Set S501 (item 37) to 24.
c) - Set S502 (item 38) to 20.
d) - Adjust S503 (item 4) and check following readings off the voltmeter (item 22).

S503	Reading off Voltmeter
1	+ 15 V
2	− 15 V
3	+ 12 V
4	+ 10 V
5	+ 5 V

e) - Press the + 30 V cut out switch (item 2).
. Check for lighting of OUTPUT DC indicator lamp (item 39).
. Check that, with S503 (item 4) set to the following positions, the readings listed below are obtained off the voltmeter (item 22).

S503	Reading off Voltmeter
6	+ 29 V
7	+ 14.5 V
8	+ 10 V
9	− 8 V
10	− 6 V
11	+ 5 V
12	+ 3 V
13	− 3 V

1-3-7 - Test the RF voltmeter, frequency meter and generator as follows :

a) - Set the frequency meter selector (item 18) to GEN.
b) - Set the generator selector (item 25) to CW (INT or EXT).
c) - Set the attenuator (item 21) to − 60 dBm.
d) - Set the selector of voltmeter (item 18) to GEN.
e) - Select the 12 frequencies generated by the generator in turn, by means of the selector (item 10) and check that the reading off the frequency meter (item 22) corresponds to the frequency selected. Check for a reading of 0.22 V ± 2 dB off the voltmeter (item 22).

Note : The reading off the voltmeter decreases by 20 dB (approx.) for 1 to 2 seconds between two frequency selections.

1-3-8 - Test the modulation as follows

Carry out the operations as per 1-3-7, for one frequency only.

a) - With the generator selector (item 25) on CW, check for a reading of X (e.g.) off the voltmeter.

b) - Set the selector (item 25) to AM and check for a deviation of X + 1 dB off the voltmeter.

1-3-9 - Test the beginning of cycle circuit as follows

a) - Set S501 (item 37) to 24.

b) - Set S502 (item 38) to 2.

c) - Press selector B (item 7) and listen for the AF signal (1000 Hz) over the loudspeaker (item 27) ; check that TUNING indicator lamp (item 27) lights up simultaneously.

d) - Press selector C (item 7) . the 1000 Hz signal should disappear and the indicator lamp (item 27) should go out.

1-3-10 - Set the generator to 16.25 MHz by means of selector 10. Check for the lighting of RANGE indicator lamp (item 29), which should be off for any other frequency.

Note : If a fault is detected during the tests, refer to the test set technical manual.

1-3-11 - Switch off the equipment

Set switch 3 to OFF.

1-4 - How to Use the Operator's Guide

1-4-1 - Types of tests

Sections 2 to 8 of the book deal with the test procedures when using the test bench TRC 319.

a) - Type A tests (section 2) shall be carried out on the complete Man-Pack system excepted test A10, which is «Battery», alone.

b) - Type B tests (section 3) shall be carried out on the Man-Pack open, with some modules withdrawn.

c) - Type C to H tests (sections 4 to 9) shall be carried out on the sub-assemblies of the vehicle-mounted stations.

d) - Type G tests (section 8) shall be carried out on 20 W power supply unit vehicle (ALT 111).

e) - Type H tests (section 9) shall be carried out on 20 W antenna unit (AEA 112).

1-4-2 - Procedure

To test the Man-Pack transceiver, observe step by step the indications of the troubleshooting flowchart located on the left page of the operator's guide which indicates the test procedure and the values (levels) to be checked.

The various connections, switchings and other operations to be carried out are shown on the right page. The components to be actuated by the operator and the relevant meters are indicated by an overprinted black circle.

The Fig. 1-5 plots the troubleshooting flowcharts A1 to A10 and B13b : observe step by step the verification of the transceiver.

1-4-3 - Example of a Test (see fig. 1-4)

Let B2a and B2b be the tests to be carried out. The test set ups are shown on the right page and the corresponding troubleshooting flowchart is shown on the left page. Squares B2a and B2b are circled in black.

Test B2a

- The three indicator lamps (items 39, 3 and 11, fig. 1-3) are lit.
- Set S501 (item 37, fig. 1-3) to 6.
- Set the frequency meter selector (item 23, fig. 1-3) to TEST.
- Check for a reading of 1.0 off the frequency meter (item 24, fig. 1-3).

  If the reading is correct, carry out test B3 (following page in section 3).

  If the reading is incorrect, carry out test B2b.

Test B2b

- Set the voltmeter selector (item 18, fig. 1-3) to TEST.
- Set the voltmeter attenuator (item 21) to 0.1 V.
- Check that pointer remains within the hatched area on the voltmeter.
  If the result is correct, replace synthesizer no. 2 board (which is faulty).
  If the result is incorrect, replace the T.C.X.O. (which is faulty).

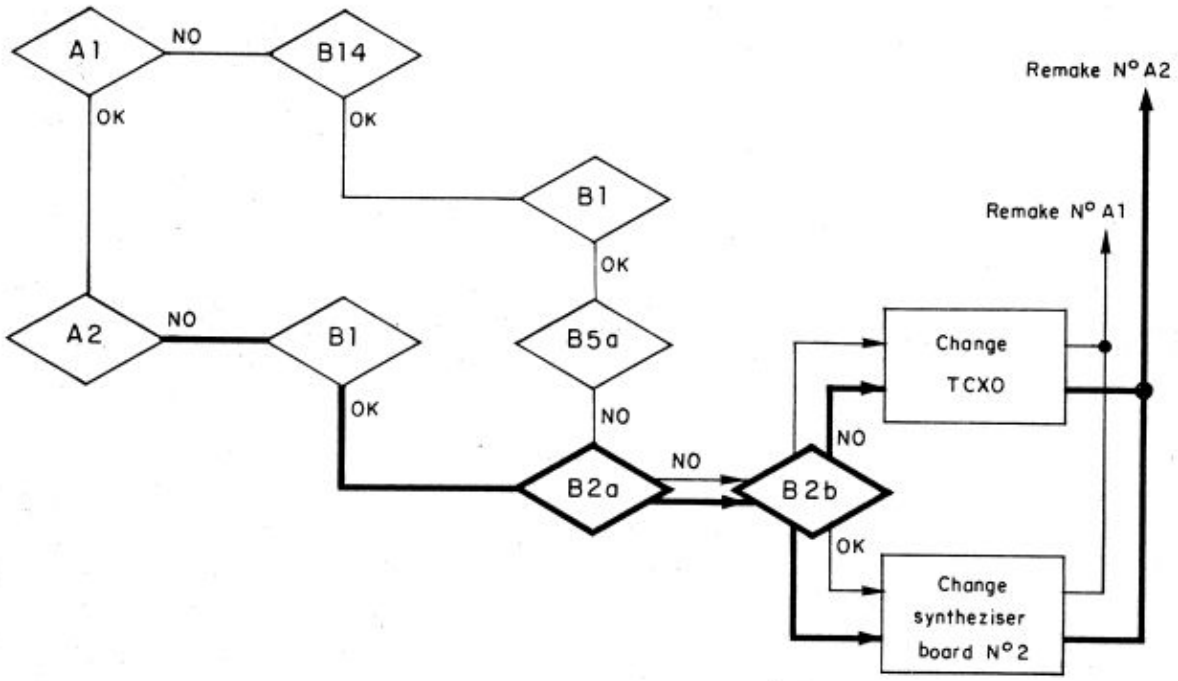

Fig. 1-4

List of test for complete checking

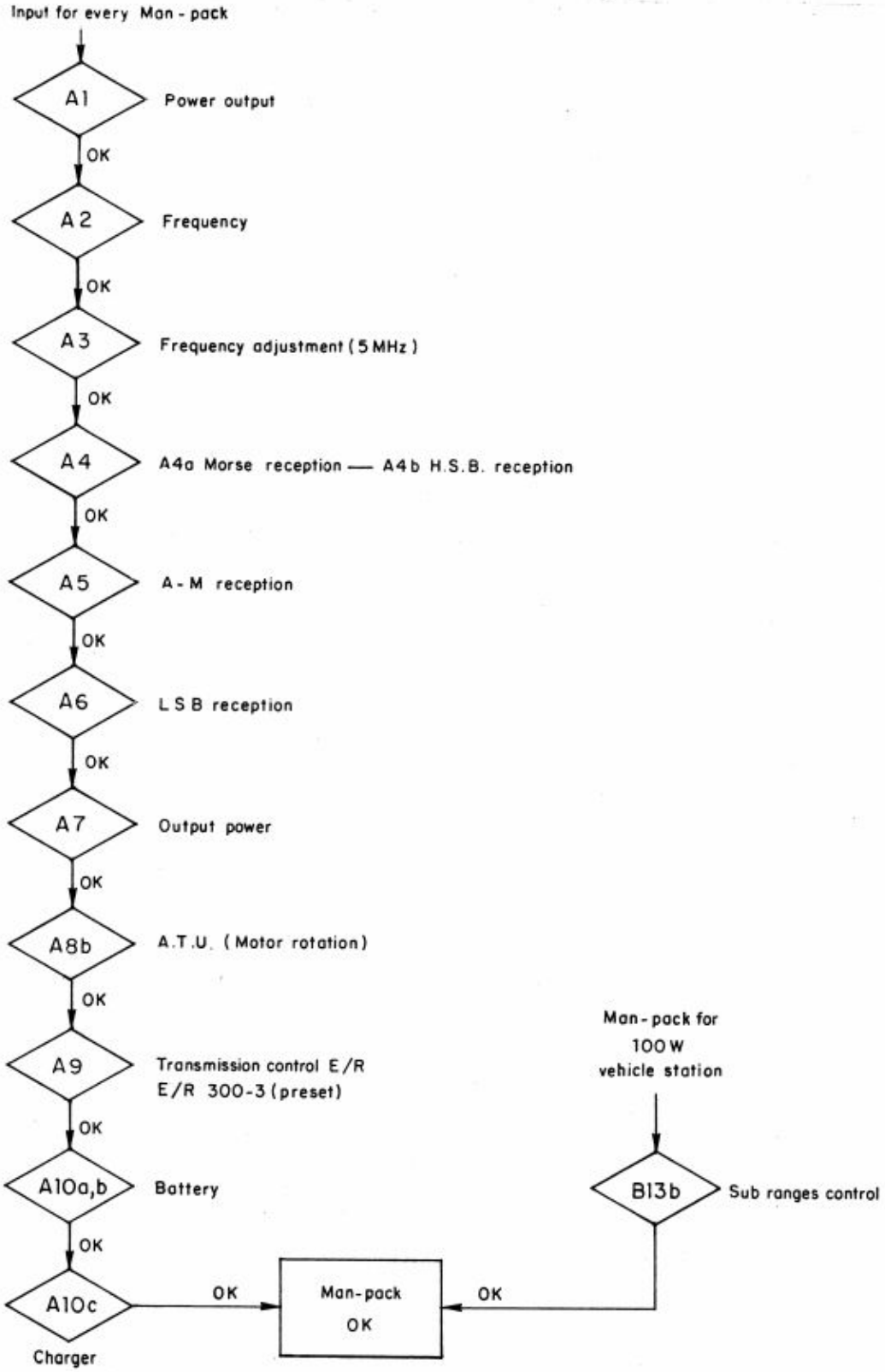

Fig. 1-5

SECTION 2

TEST A : MAN-PACK FUNCTIONAL

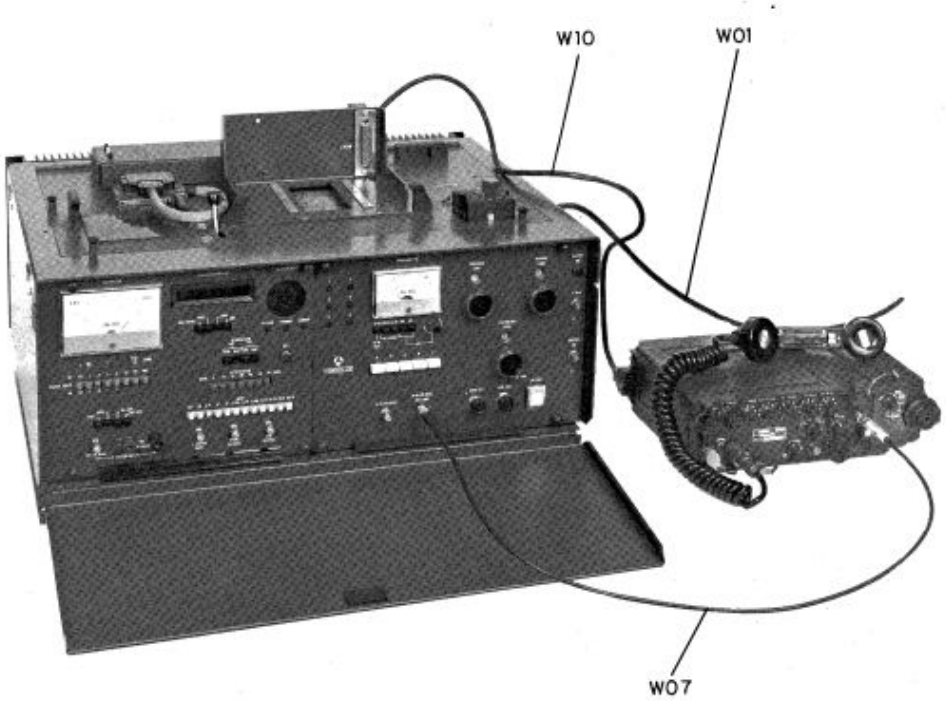

Fig. 2-1

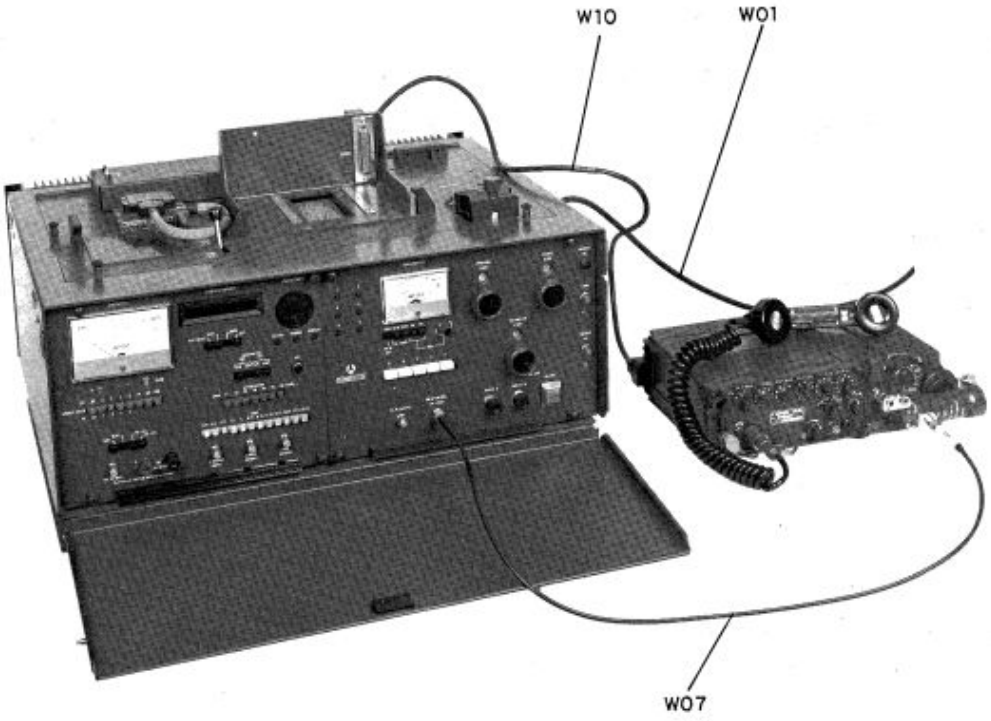

Fig. 2-2

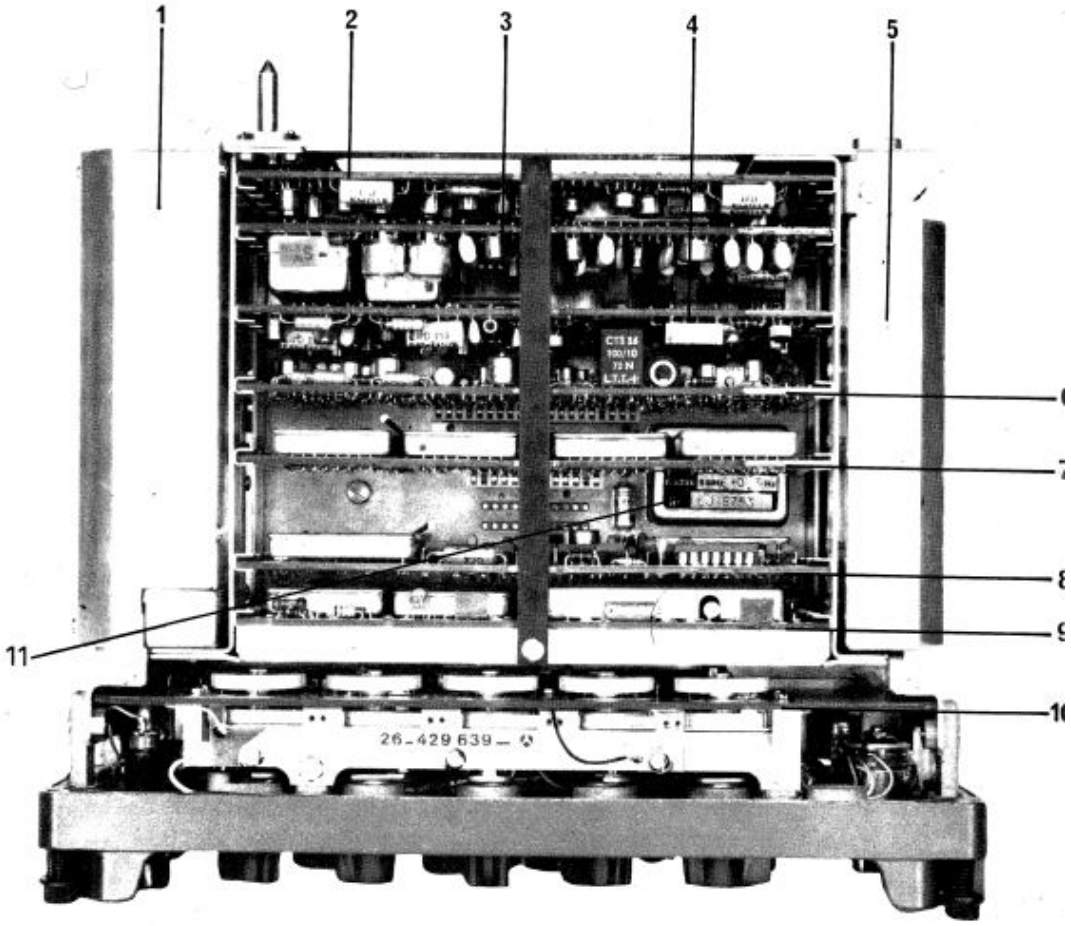

1	HF Head Unit	
2	Peripheral Circuits Board	(purple)
3	Filter and 2.5 MHz Filter Circuit Board	(blue)
4	Exciter Board	(green)
5	Converter Unit	
6	AF Board	(yellow)
7	Synthesizer (Board No. 3)	(orange)
8	Synthesizer (Board No. 2)	(red)
9	Synthesizer (Board No. 1)	(brown)
10	Setting Board	
11	TCXO	

Fig. 2-3

PROCEDURE FOR TESTS A1 TO A10

1 - Prepare set up shown on opposite page and see fig. 2-1 and 2-2

1 - Dismantling the battery unit.

1-1 - Set selector O, L, H, (rep. 1 - fig. 2-1) to the "O" position (position OFF).
1-2 - Put the man-pack system on a flat and clean surface, with the front panel facing the operator.
1-3 - Release the two battery unit toggle fasteners.
1-4 - Disengage the toggle fasteners completely.
1-5 - While holding the transceiver unit, pivot the battery unit to the left, the front right edge acting as a hinge (this ensures withdrawal of the battery unit connector from the transceiver unit connector without damage).
1-6 - Uncouple the battery unit from the transceiver unit by disengaging the fixing lug (located on the front panel of the battery unit) from its housing (located on the front panel of the transceiver unit).
1-7 - Remove the battery unit.

2 - Plug in the handset into one of the sockets

3 - Connect the cables W10. . .

2 - Remove 20 watts amplifier, protective cover, HF head, PC boards (if necessary for tests A1 to A10)

1 - Remove 20 watts amplifier.

1-1 - Set the "O, L, H" selector on the transceiver front panel to "0".
1-2 - Put the man-pack transceiver on a flat, clean surface, with front panel facing the operator.
1-3 - Remove the battery unit (see fig. 2-4).
1-4 - Remove the antenna tuning unit
a) Remove the four fixing screws of the antenna tuning unit by means of the 4 mm Allen key.
b) Withdraw the antenna tuning unit from the transceiver unit, by pulling perpendicularly to the transceiver unit (left to right).
c) Remove the antenna tuning unit.
1-5 - Loosen the four fixing screws of the 20 W amplifier by means of the 4 mm Allen key, behind the transceiver.
1-6 - Withdraw the 20 W amplifier from the transceiver unit.
1-7 - Remove the 20 W amplifier.

2 - Remove protective cover.

2-1 - Loosen the four fixing screws on the front panel, by means of the 4 mm Allen key.
2-2 - Remove the transceiver from the case by pulling it out horizontally.
2-3 - Withdraw and remove the seal.

3 - Remove the HF head.

3-1 - Loosen both HF head fixing screws by means of the 5 mm screwdriver.
3-2 - Withdraw and remove the 2 fixing screws and washers.
3-3 - Withdraw and remove the HF head.

TESTS A1 - A2 - TRANSMISSION

1 – TROUBLESHOOTING FLOWCHART

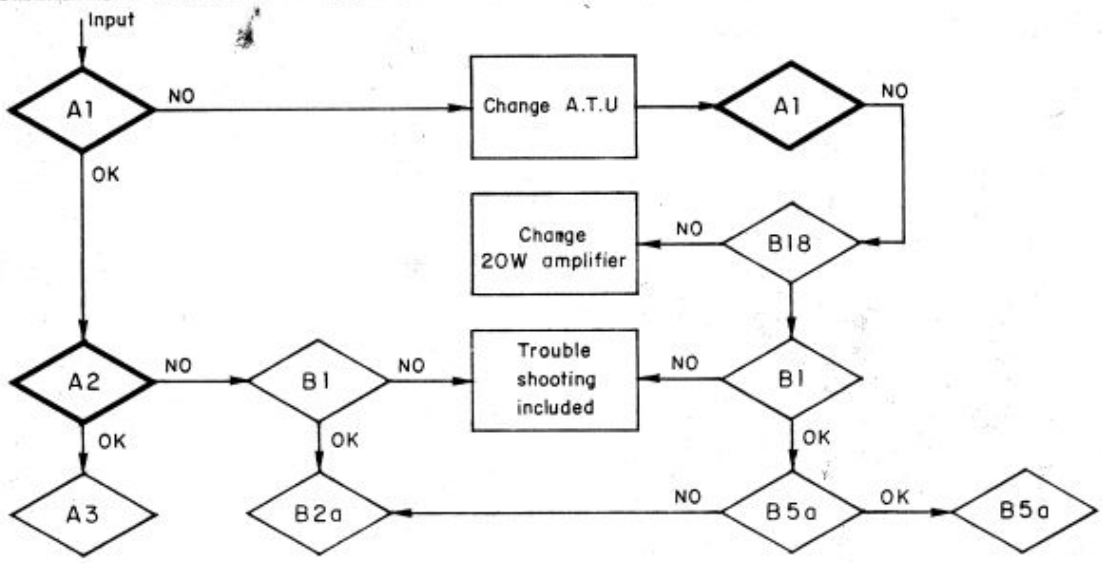

2 – PROCEDURE

2-1 - Prepare set up shown on the right page and see fig. 2-1.

For every frequency on the schedule : press the pressel on the handset.

F (kHz) Man-Pack setting
E/R 300-4
E/R 300-1-2-3
2 0 0 0 0 0
1 1 1 1 1 1
0 2 2 2 2 2
0 3 3 3 3 3
0 4 4 4 4 4
0 5 5 5 5 5
0 6 6 6 6 6
0 7 7 7 7 7
2 8 8 8 8 8
2 9 9 9 9 9
1 9 9 9 9 9
0 2 0 0 0 0

2-2 - Test A1 - Power reading

30 to 90 % - Man-Pack on "L" (Low power).
80 to 170 % - Man-Pack on "H" (High power).

2-3 - Test A2

Frequency reading :
Man-Pack setting : F + 1.0, Tolerance ± 1 kHz.

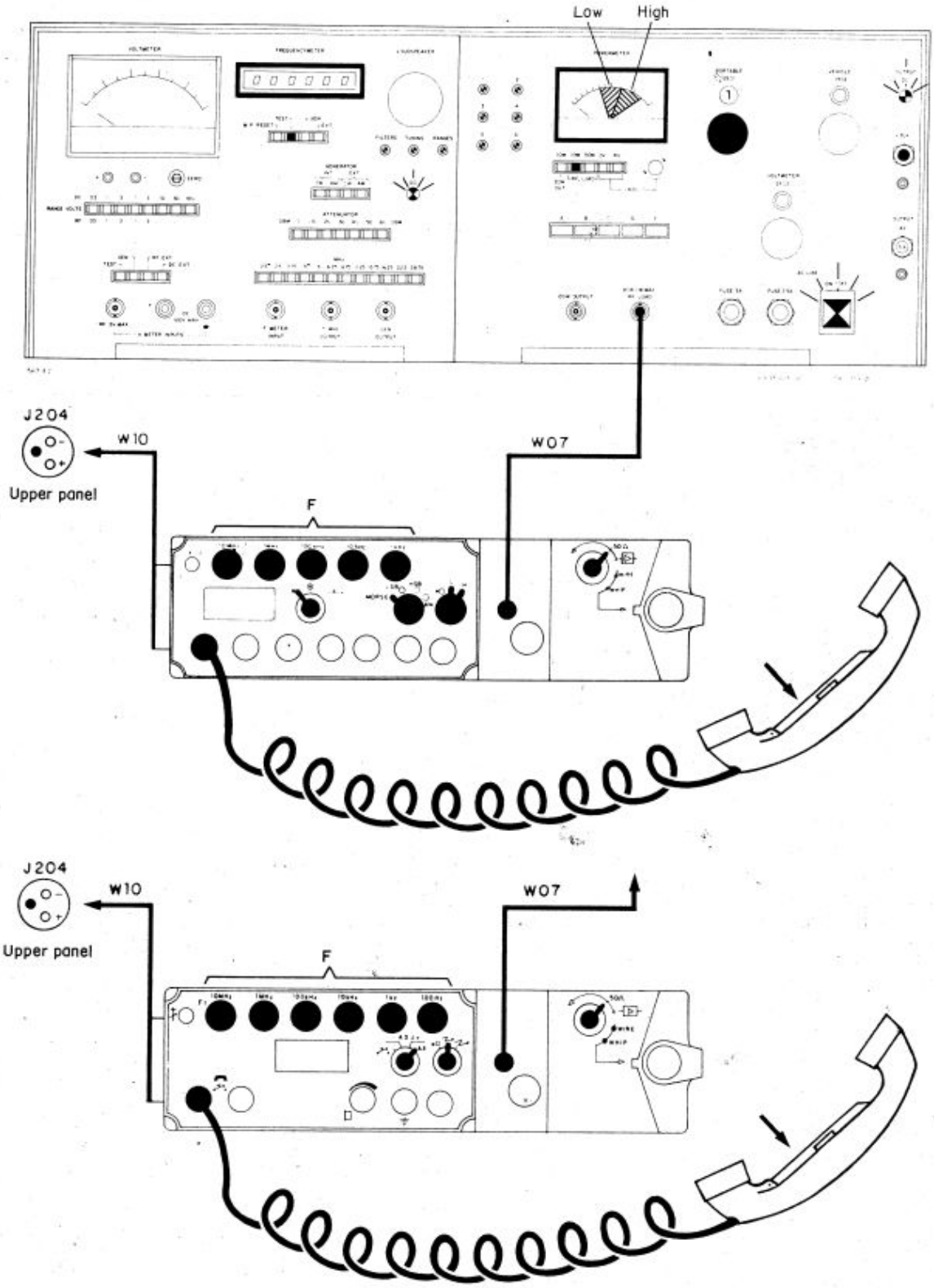
Low
High
J204
W10
W07
Upper panel
F
J204
W10
W07
Upper panel
F

TEST A3 - 5 MHz MAN-PACK

1 – TROUBLESHOOTING FLOWCHART

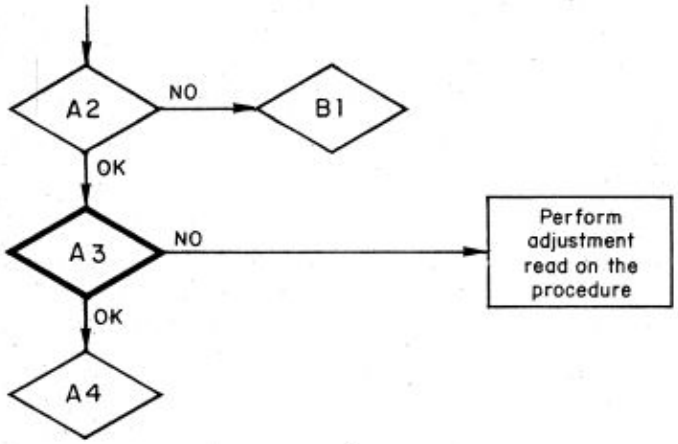

2 – PROCEDURE

2-1 - Prepare set up shown on the right page and see fig. 2-1.

CAUTION : FOR THIS TEST, THE TEST BENCH MUST HAVE BEEN ENERGIZED 20 MINUTES MINIMUM WITH AMBIANTE TEMPERATURE BETWEEN + 20 C TO 25 C.

2-2 - Press the pressel on the handset : a very beating must be heard in the earphone ; simultaneously, the TUNING light must flash (lighting - extinction) at a rate of 3 illuminations per minute maximum.

NOTE : The operator must be able of counting these flashings, otherwise, repeat frequency adjustment (see para. 2-3 below).

2-3 - Frequency adjustment (if necessary)

– Unscrew Man-Pack plug (item 1) using a 4 mm Allen key.

After removal of this plug, a pin featuring a slot can be seen.

Insert a 4 mm screwdriver in the pin slot.

Depress the set pressel and turn the screwdriver in either direction to obtain a very low beating (approx. 1 illumination second at TUNING light).

DO NOT EXERT UNDUE FORCE WITH THE SCREWDRIVER.

– Replace plug using 4 mm Allen key.

TEST A3

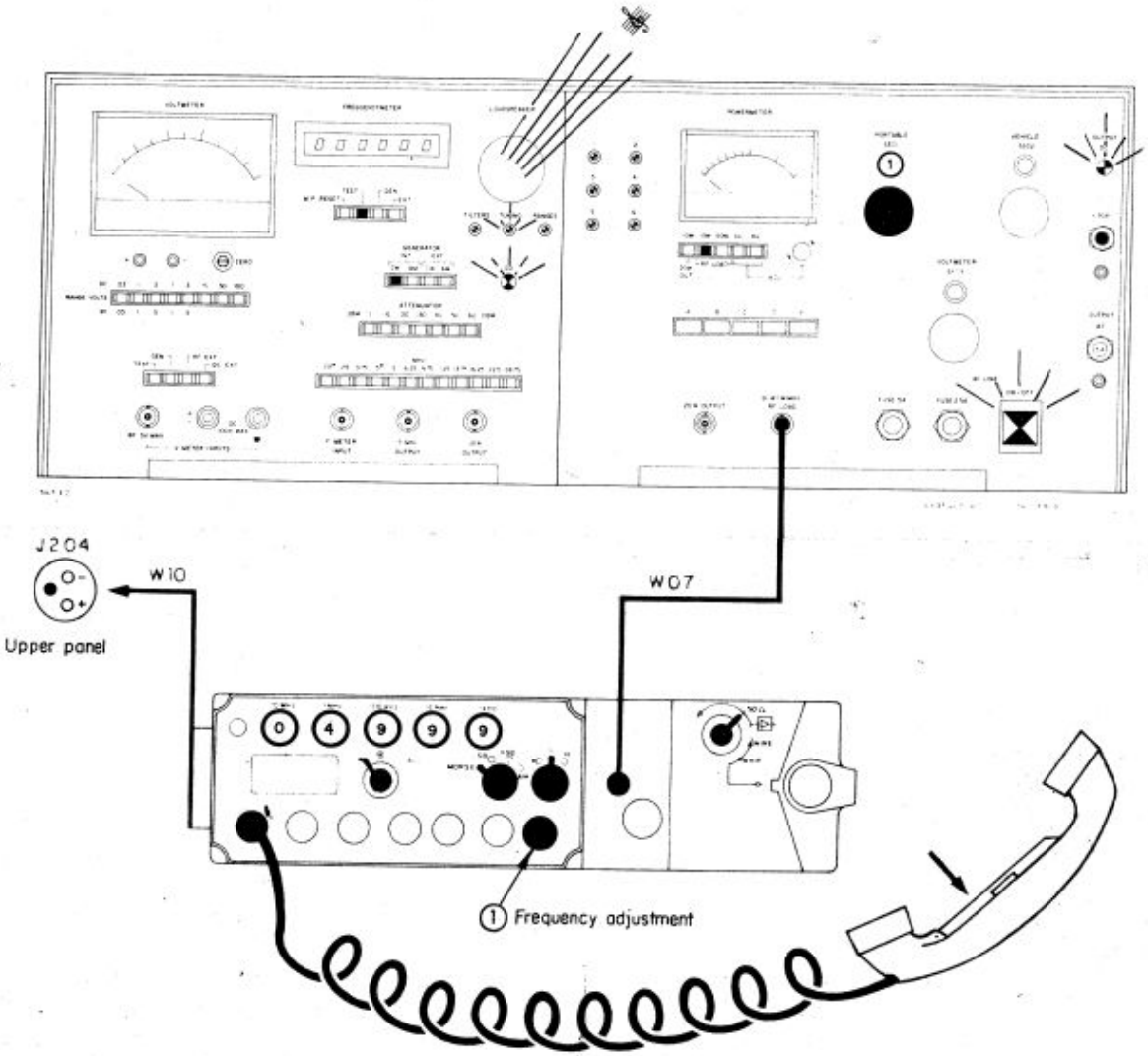

TEST A4a - MORSE RECEPTION

1 – TROUBLESHOOTING FLOWCHART

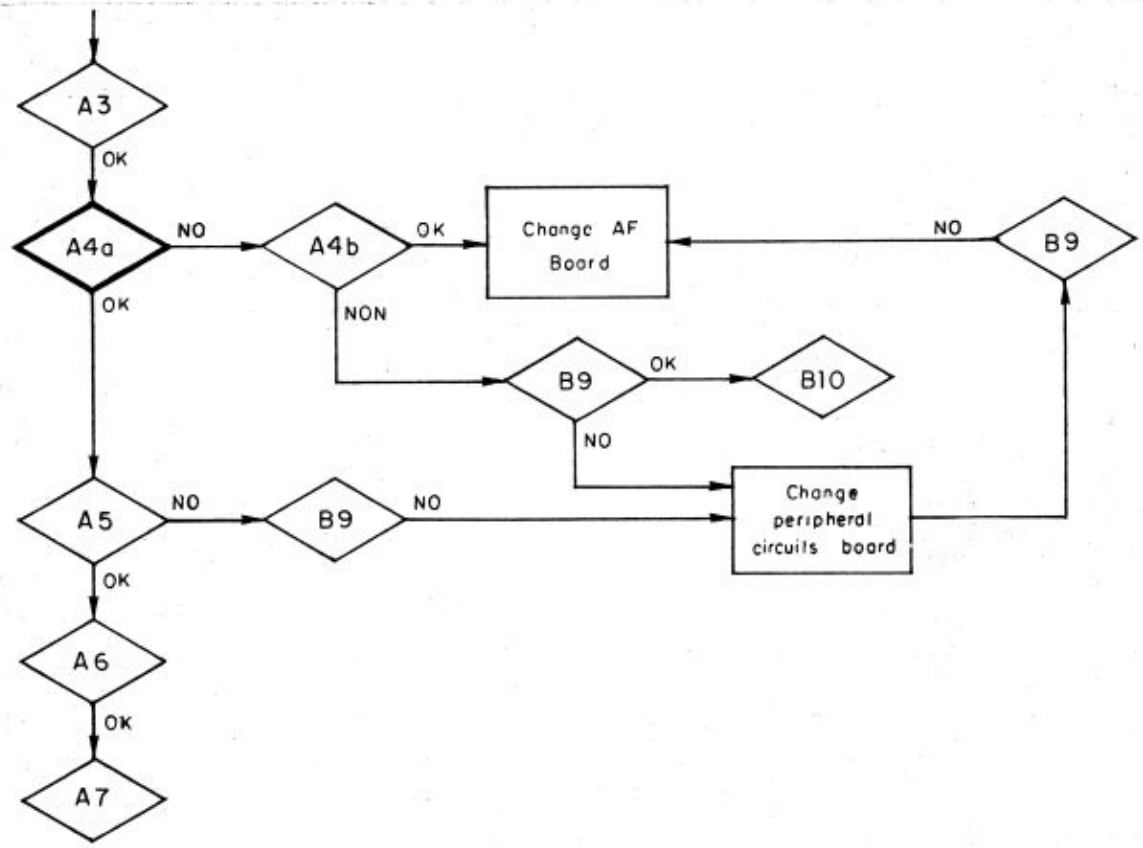

2 – PROCEDURE

2-1 - Prepare set up shown on the right page and see fig. 2-1.

2-2 - Test A4a a tone (1000 Hz) must be heard in the earphone of the handset.

TEST A4a

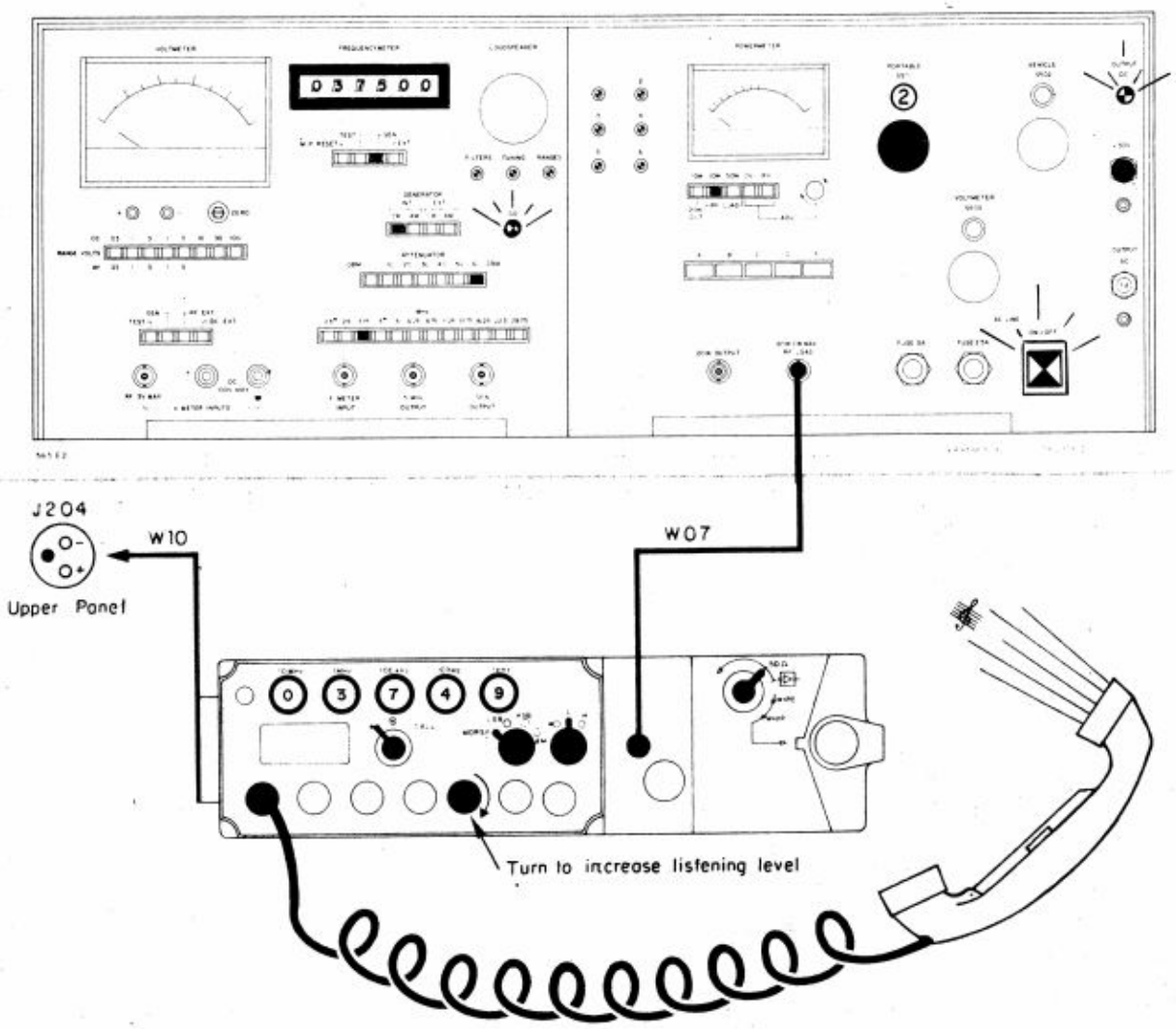
037500
J204
W10
W07
Upper Panel
Turn to increase listening level

TEST A4b - H.S.B. RECEPTION

1 – TROUBLESHOOTING **FLOWCHART**

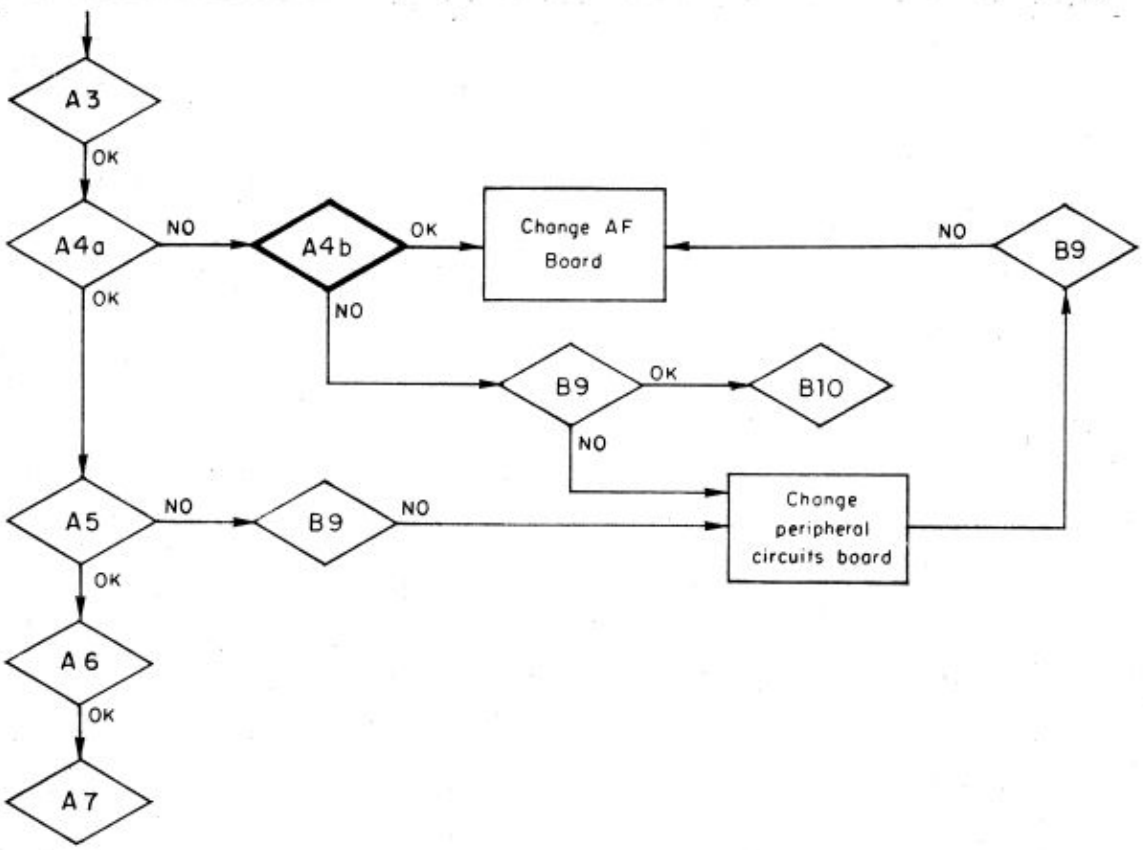

2 – **PROCEDURE**

2-1 - Prepare set up shown on the right page and see fig. 2 1.

2-2 - A tone (1000 Hz) must be heard in the earphone of the handset.

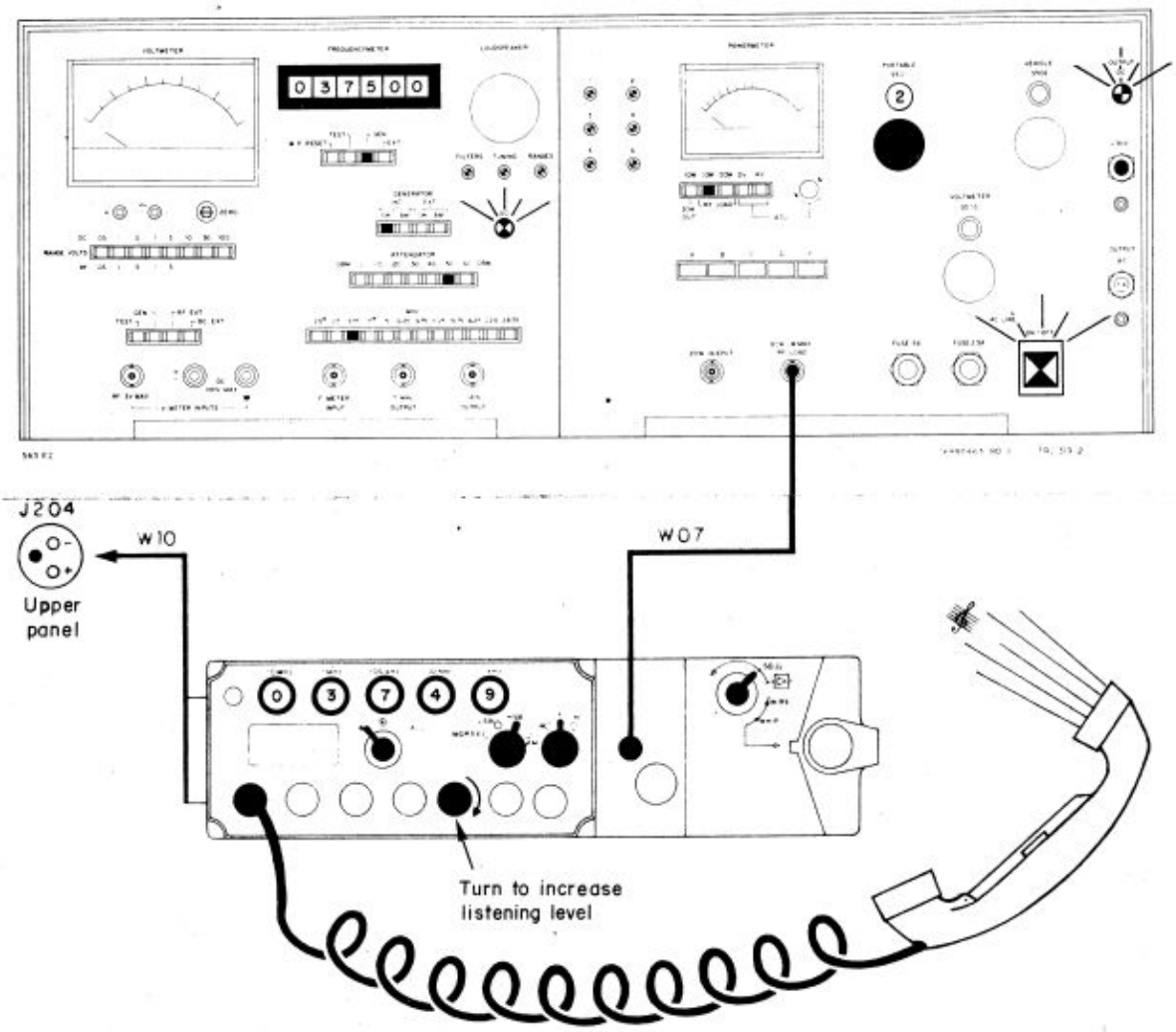
J204
W10
W07
Upper panel
Turn to increase listening level

TEST A5 - A.M. RECEPTION

– TROUBLESHOOTING FLOWCHART

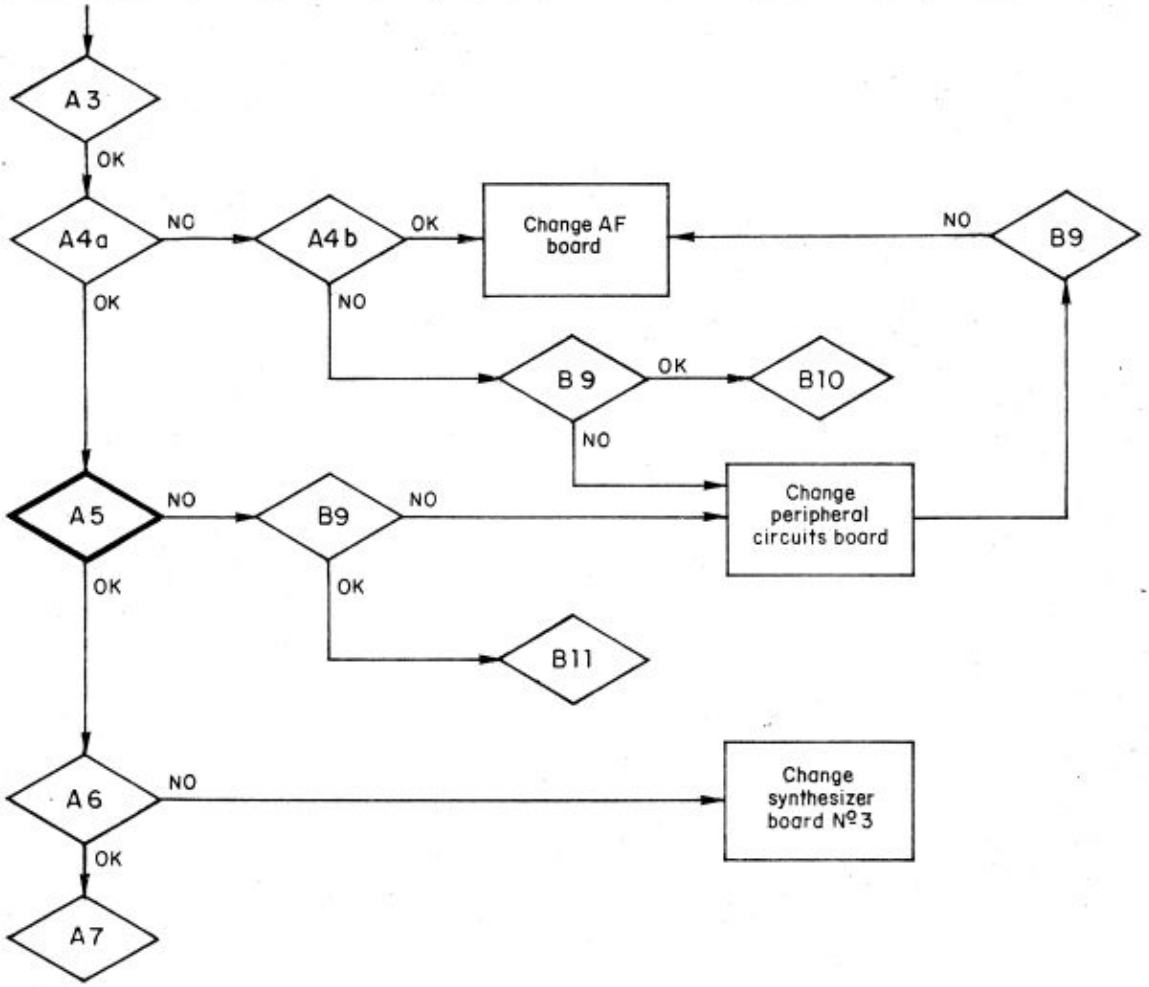

2 – PROCEDURE

2-1 - Prepare set up shown on the right page and see fig. 2-1.

2-2 - A tone (1000 Hz) must be heard in the earphone of the handset.

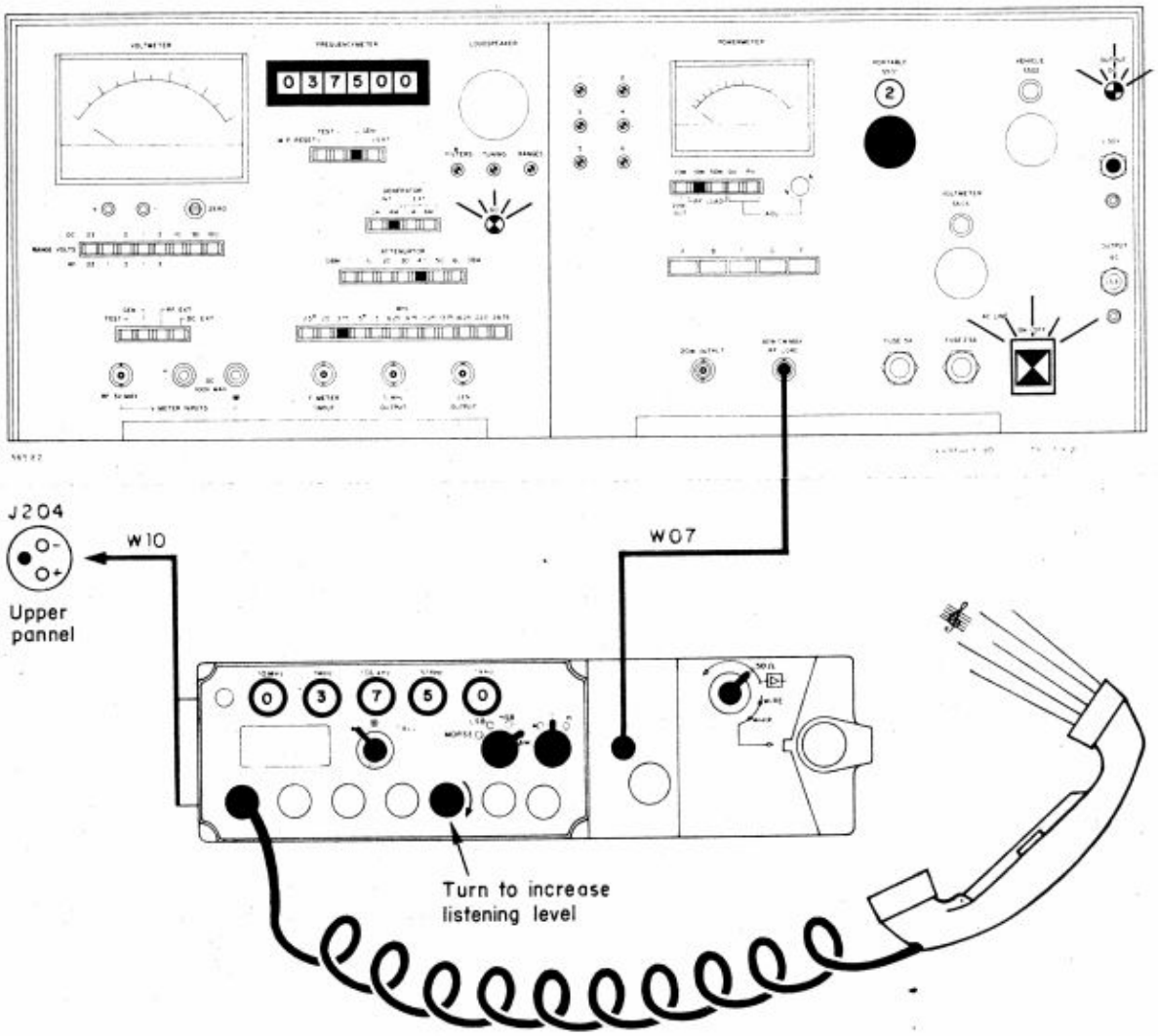
037500
J204
W10
W07
Upper
pannel
Turn to increase
listening level

TEST A6 - L.S.B. RECEPTION

1 – TROUBLESHOOTING FLOWCHART

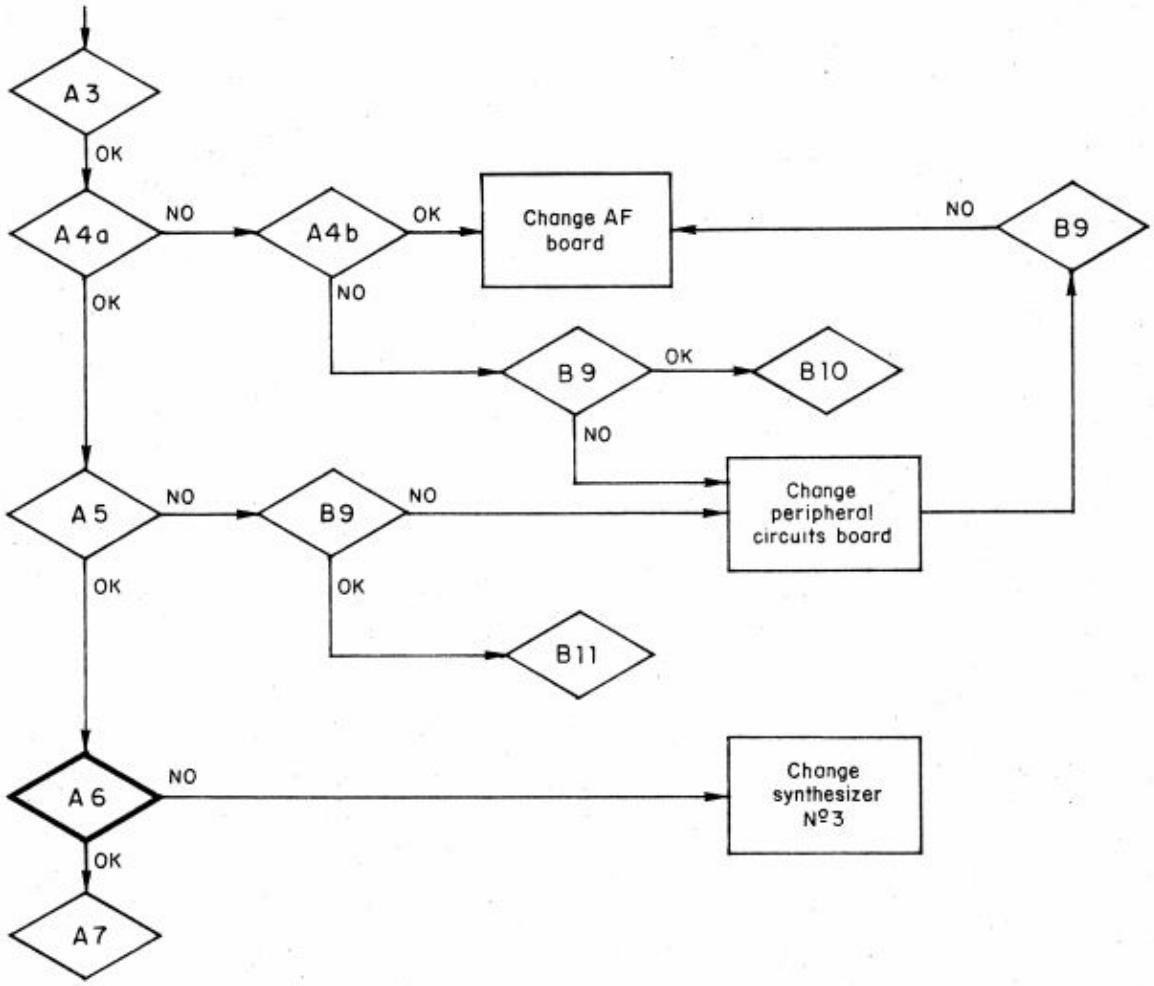

2 – PROCEDURE

2-1 - Prepare set up shown on the right page and see fig. 2-1.

2-2 - A tone (1000 Hz) must be heard in the earphone of the handset.

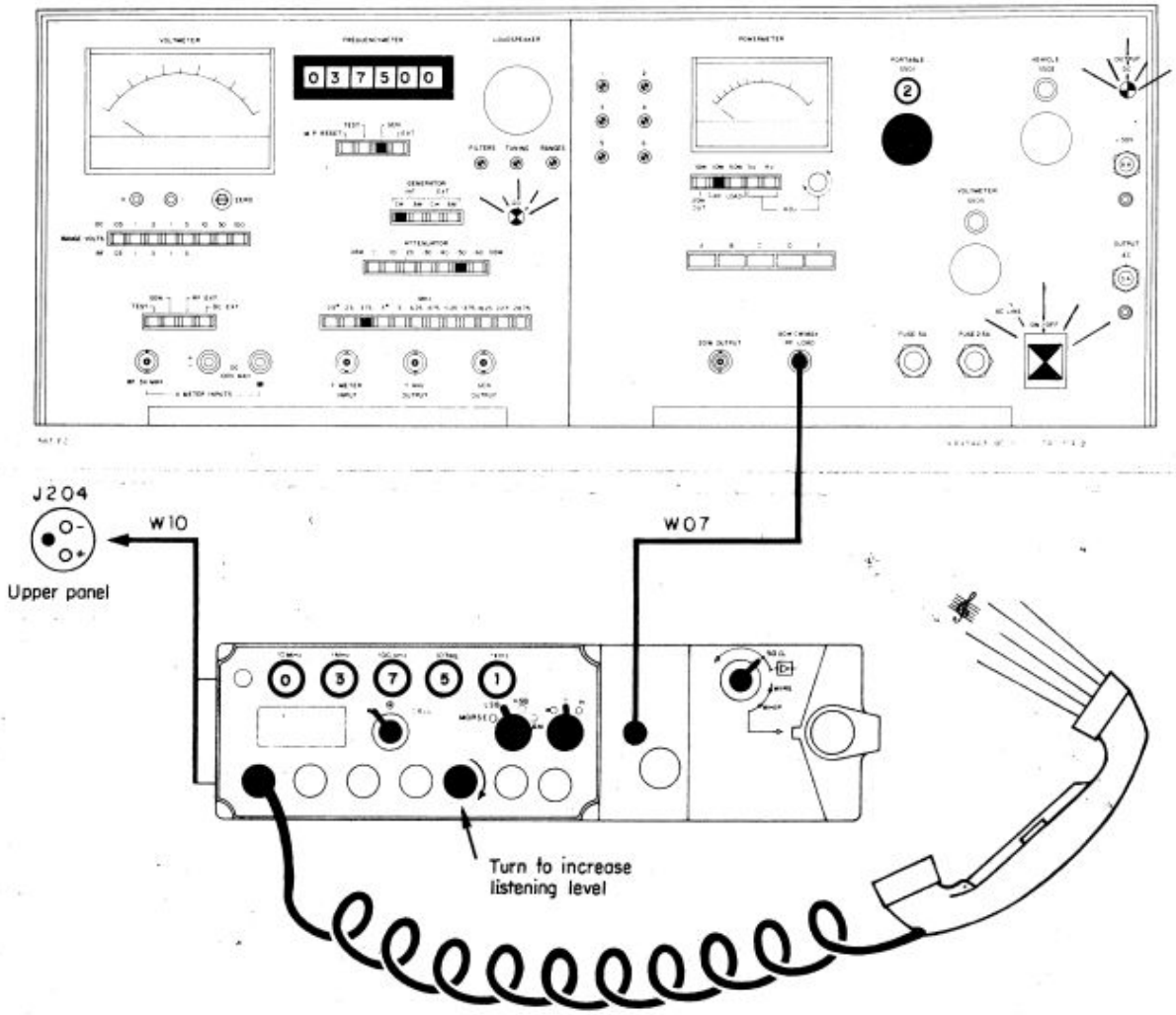
J204
W10
W07
Upper panel
Turn to increase
listening level

TESTS A7 - A8a

1 – TROUBLESHOOTING FLOWCHART

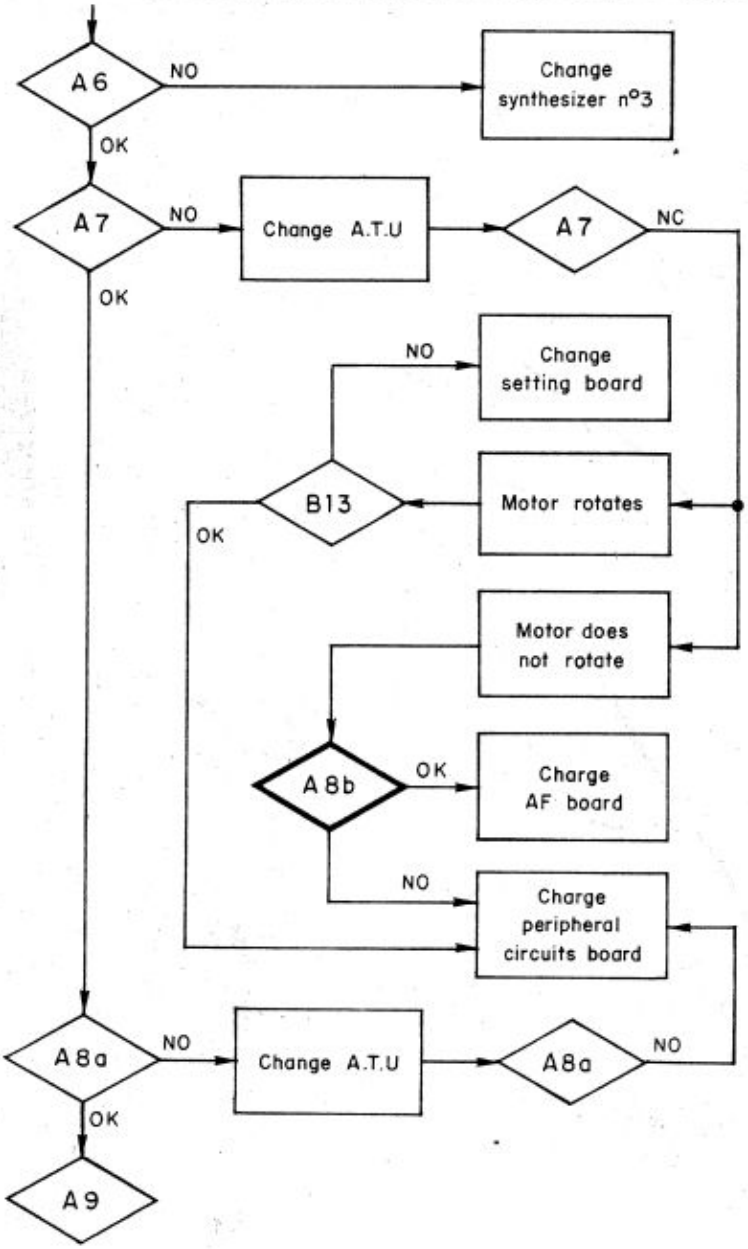

2 – PROCEDURE

2-1 - Prepare set up shown on the right page and see fig. 2-1.

For each frequency of the following table, wait for the A.T.U. setting end (motor stopping). Press the pressel on the handset.

2-2 - Test A7

Power meter reading : 60 to 150 % - Man-Pack on "H" (High power).
25 to 60 % - Man-Pack on "L" (Low power).

2-3 - Test A8a

A tone (1000 Hz) must be heard in the earphone of the handset.

Man-Pack setting
E/R 300-4
E/R 300-1-2-3
0 2 0 0 0 0
0 2 6 0 0 0
0 3 6 0 0 0
0 5 6 0 0 0
0 9 6 0 0 0
2 9 6 0 0 0

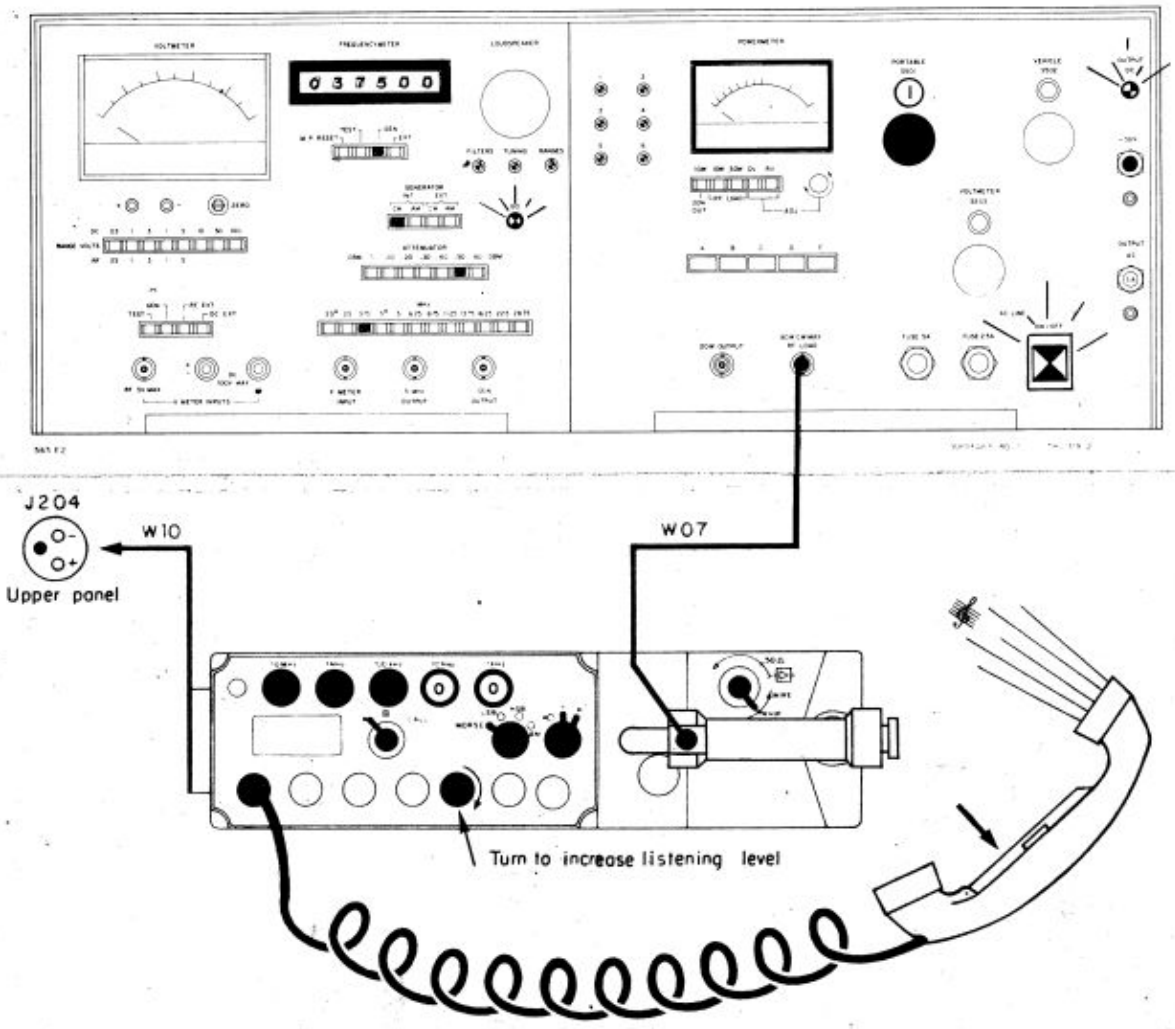
J204
W10
W07
Upper panel
Turn to increase listening level

TEST A8b - TRANSMISSION

1 – TROUBLESHOOTING FLOWCHART

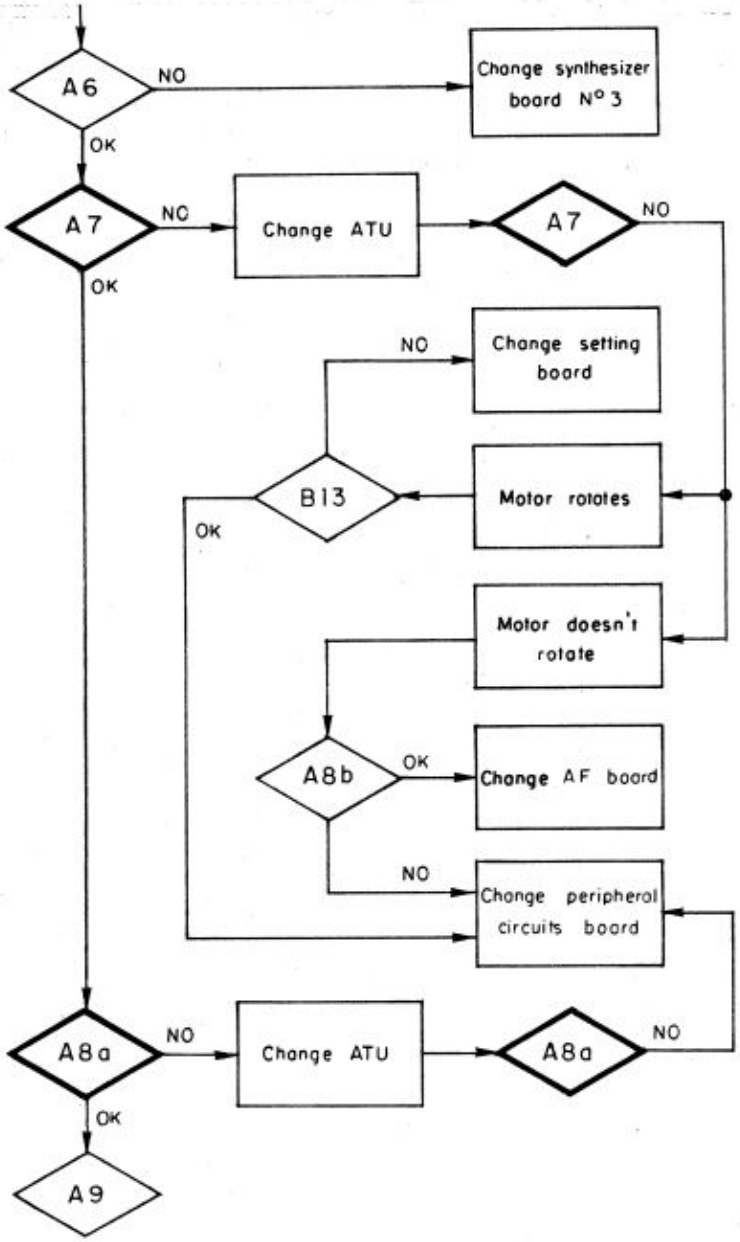

2 – PROCEDURE

2-1 - Prepare set up shown on the right page and see fig 2-1.

2-2 - Set Man-Pack on "AM" mode.

After A.T.U. tuning for each frequency of the following table :

Press the pressel on the handset

Power metre reading 60 to 150 % on "H" (High power).

Power metre reading 25 to 60 % on "L" (Low power).

Man-Pack setting
2000 kHz
2600 kHz
3600 kHz
5600 kHz
9600 kHz
29600 kHz

TEST A8b

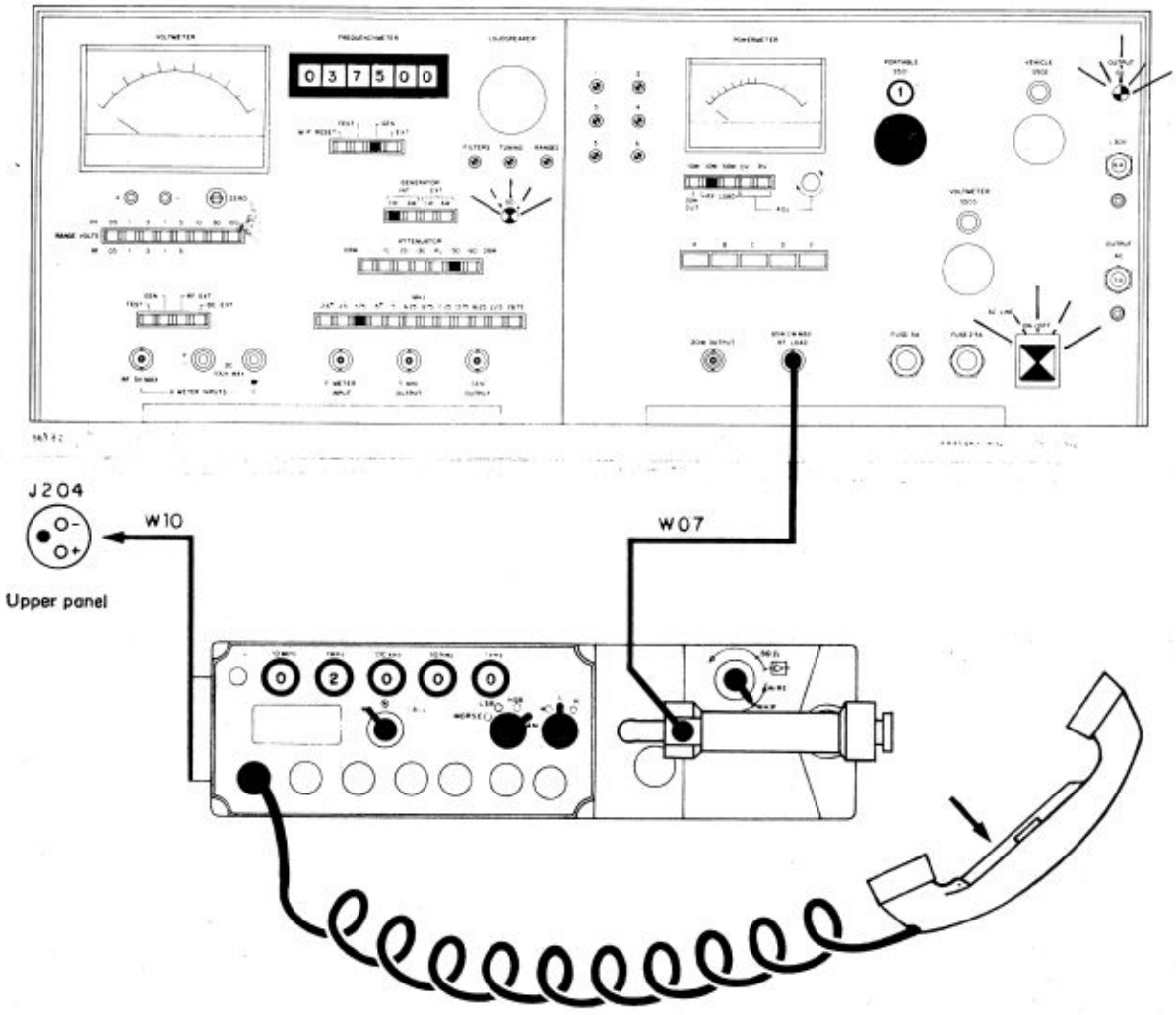

TESTS A9 - A9a - A9b - EMISION

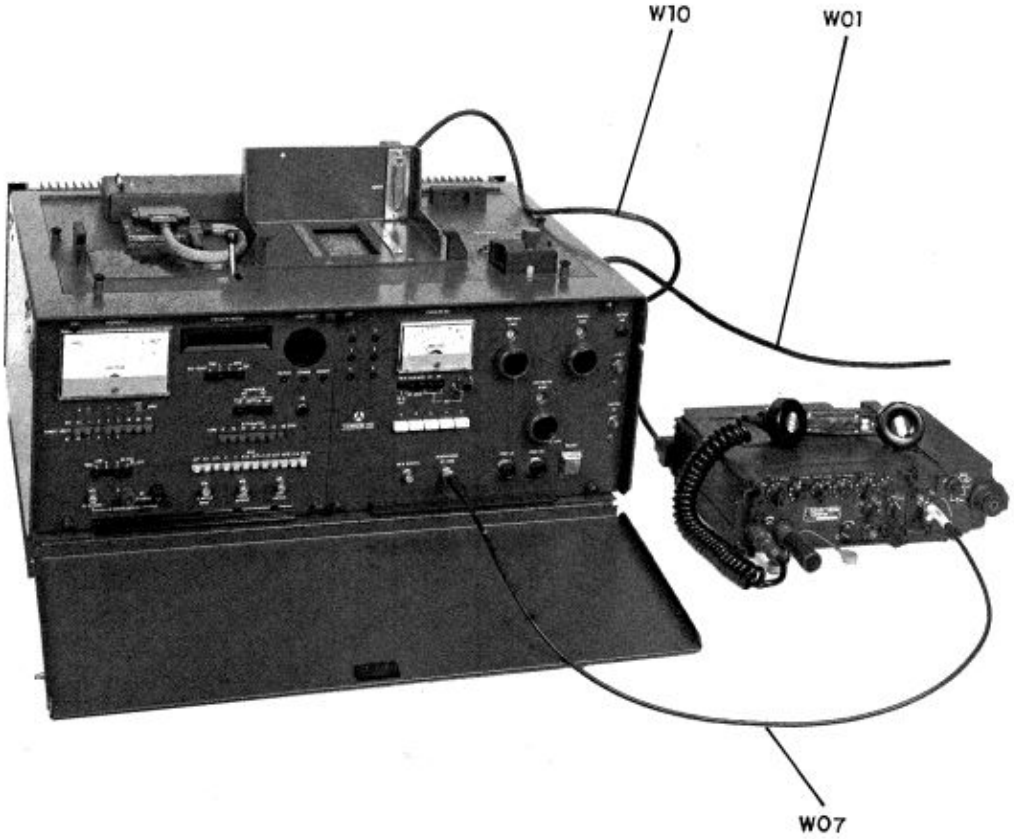

Fig. 2-3

TESTS A9 - A9a - A9b - TRANSMISSION

1 – TROUBLESHOOTING FLOWCHART

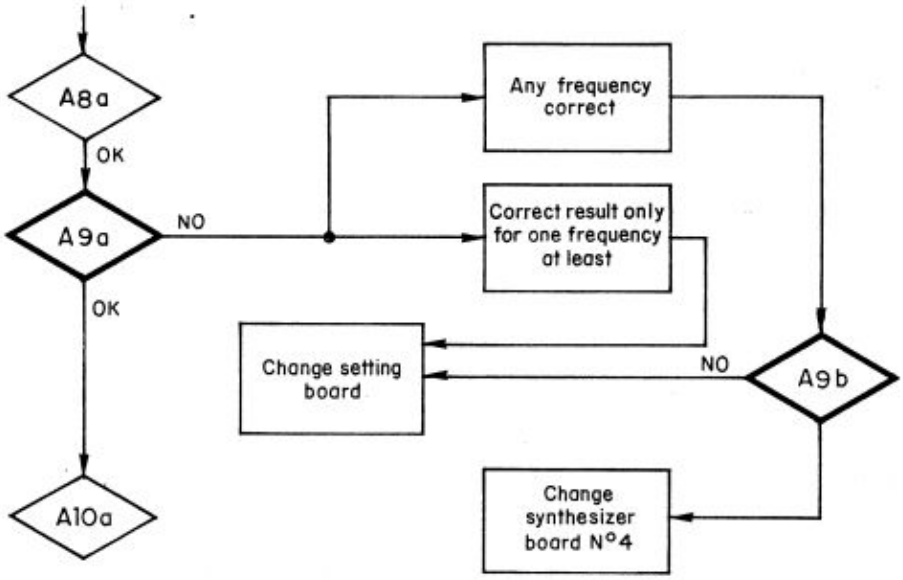

2 – PROCEDURE

2-1 - Prepare set up shown on the right page and see fig. 2-3

2-2 - Test A9

- Only for the transceiver E/R 300-3.
- For the transceiver E/R 300-1-2-4. See directly on test A10.

2-3 - Test A9a

a) Display the channel A.
b) Display the frequency corresponding with the channel A shown on the opposite table (02222 kHz).
c) Press the pressel, item (1) during 1 second.
d) Display successively every channel and the frequency corresponding, and follow the order a → b → c, let :
   - setting of the channel
   - setting of the frequency corresponding with the channel
   - press the pressel, item (1)
e) Set test bench and Man-Pack on position "OFF". Wait about 30 seconds.
f) Set again the test bench, and the Man-Pack on position "ON".
g) Display channel A.
   Press the pressel on the handset.
   Read on the frequencymeter, the frequency corresponding with the table (02222.0).
   Depress the pressel.
h) Display successively every channel (A, B . . . . H) and read the frequency corresponding (see on the table) ; for that, press the pressel on the handset.

Setting	
Channel	Frequency
A	0 2 2 2 2
B	0 3 3 3 3
C	0 4 4 4 4
D	1 5 5 5 5
E	1 6 6 6 6
F	1 7 7 7 7
G	2 8 8 8 8
H	2 9 9 9 9

2-4 - Test A9b

Execute operations a, b, c, d, g and h of test A9a (don't execute operations e and f).

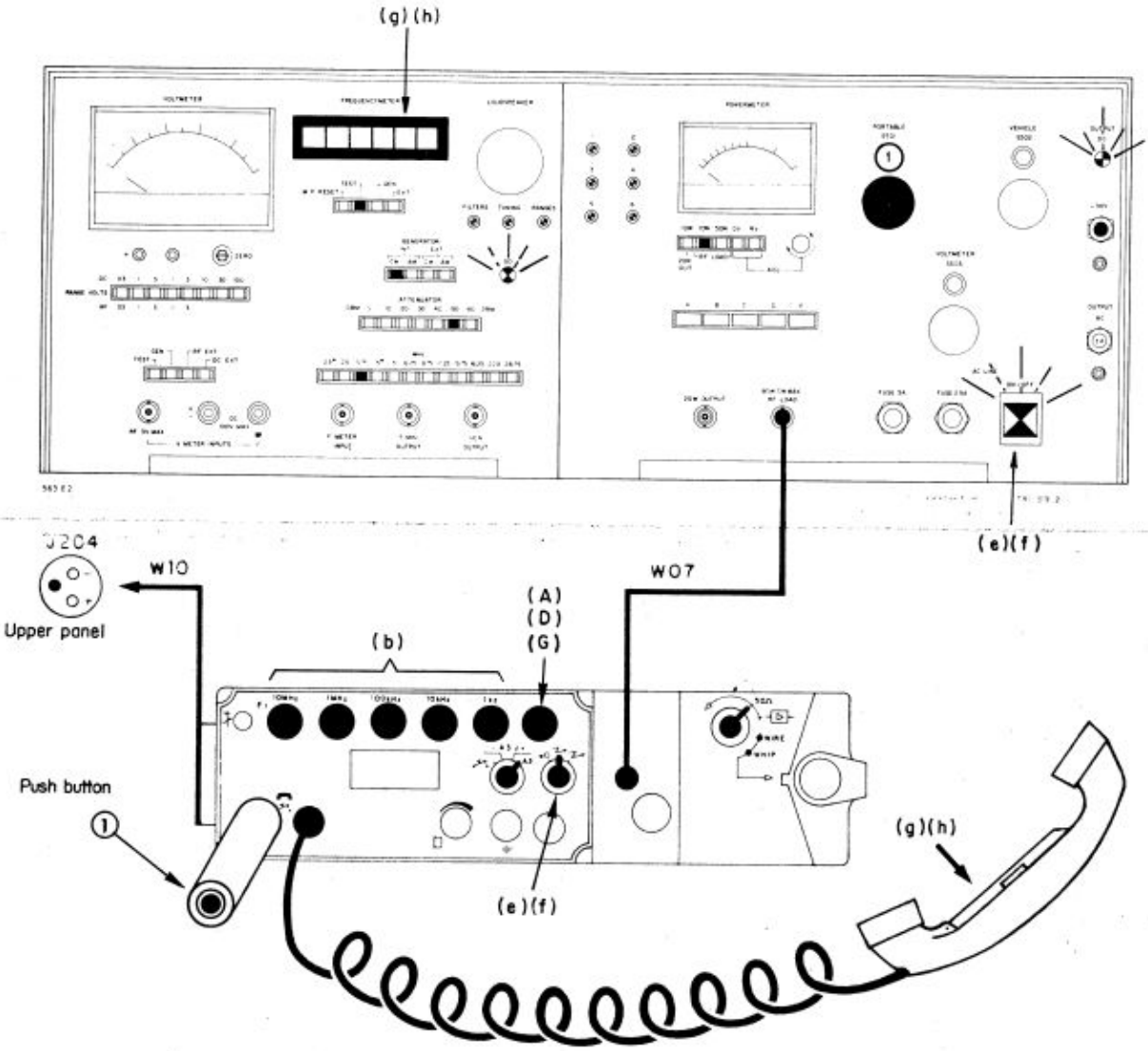

E/R 300-3 (type 1 kHz - preset)

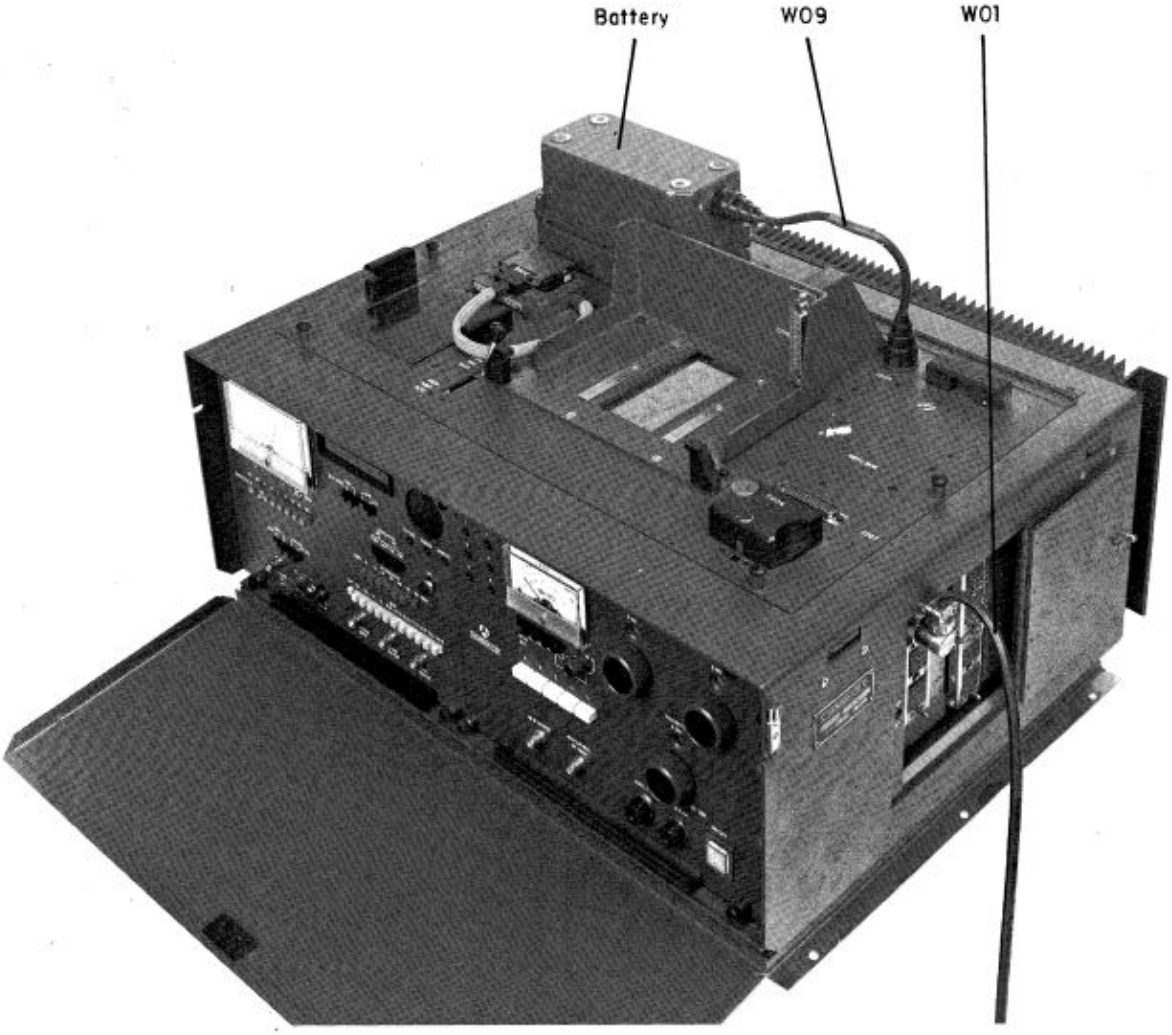

Fig. 2-4

PROCEDURE FOR TEST A10a - A10b AND A10c

1 – Remove battery unit and (see fig. 2-1).

2 – Put battery unit on the test set (see fig. 2-4).

3 – Prepare the TEST A10a - A10b (see following pages).

4 – Prepare the TEST A10c :

- connect W09 cable
- see procedure TEST A10c.

TESTS A10a - A10b - BATTERY

1 – TROUBLESHOOTING FLOWCHART

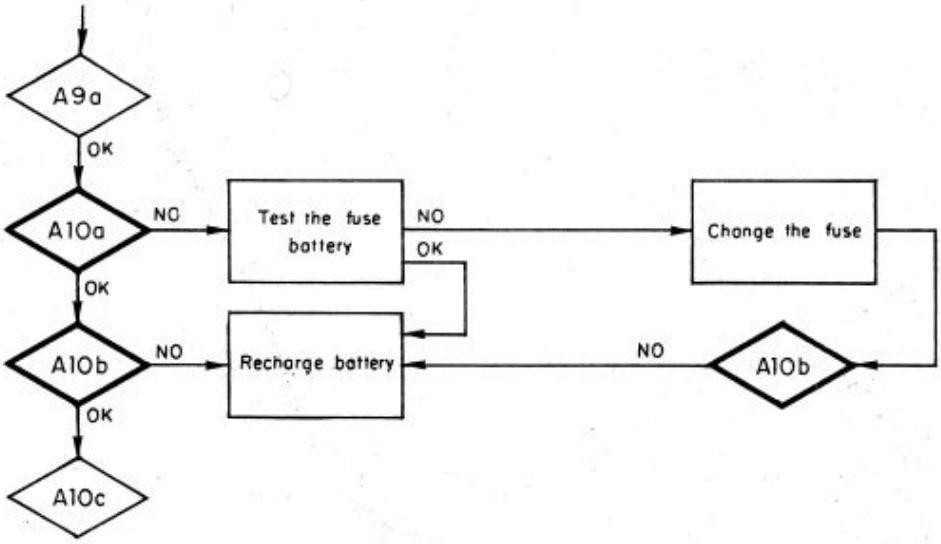

2 - PROCEDURE

2-1 - Prepare set up shown on the right page and see fig 2-4.

2-2 - Test A10a

Voltmeter reading : > 0 V.

2-3 - Test A10b

	Voltmeter reading
	+ 14 V
Press pushbutton "B"	+ 13.5 V mini.

NOTE : If voltmeter reading = 0 : check fuse of battery. Change fuse if necessary.

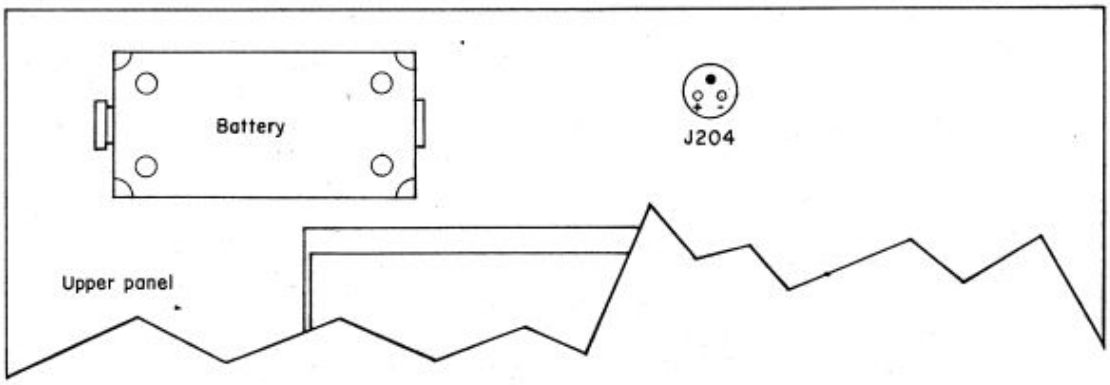
Battery
J204
Upper panel

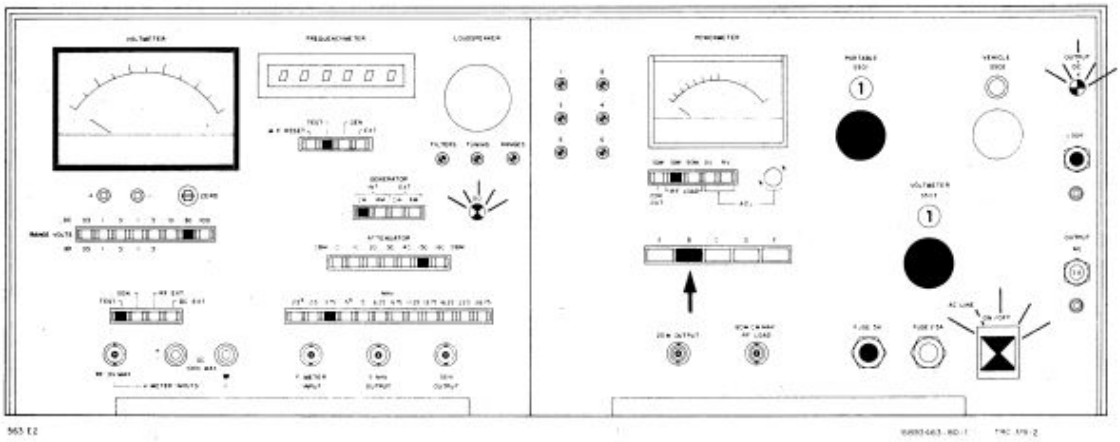
563 E2

TEST A10c - BATTERY CHARGER

1 – TROUBLESHOOTING FLOWCHART

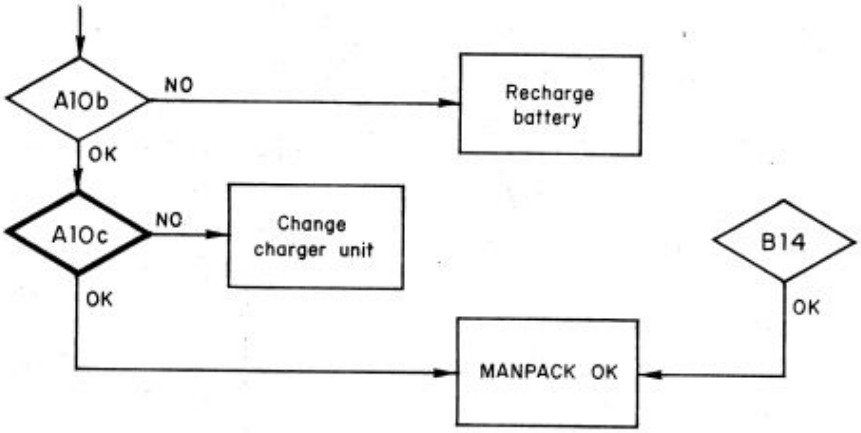

2 – PROCEDURE

2-1 - Prepare set up shown on the right page and see fig. 2-4.

2-2 - Test A10c

Voltmeter reading + 0,05 to 0,09 V.

TEST A10c

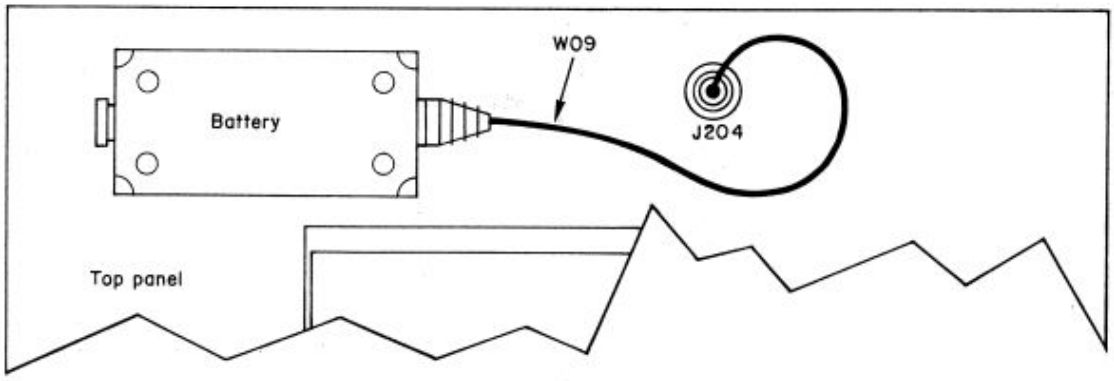

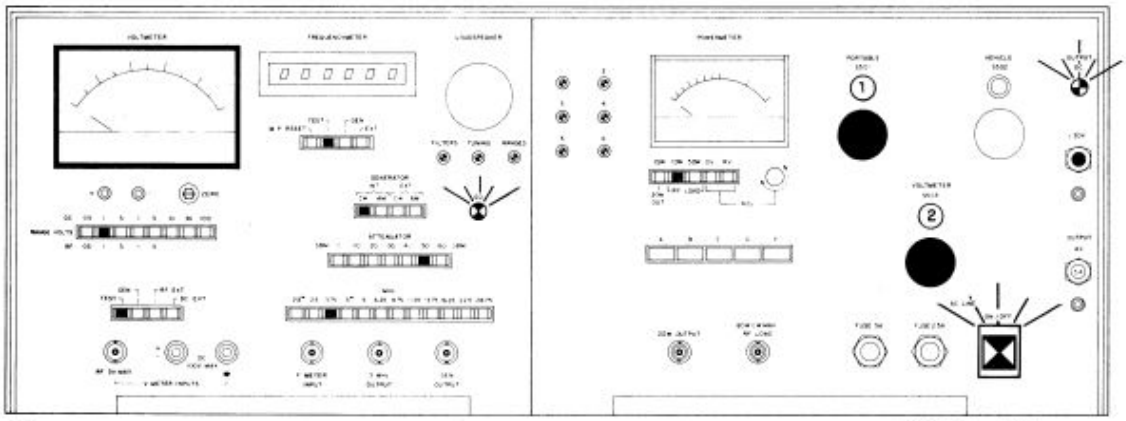

563 E2

SECTION 3

TEST B : MAN-PACK DIAGNOSTIC (OPEN)

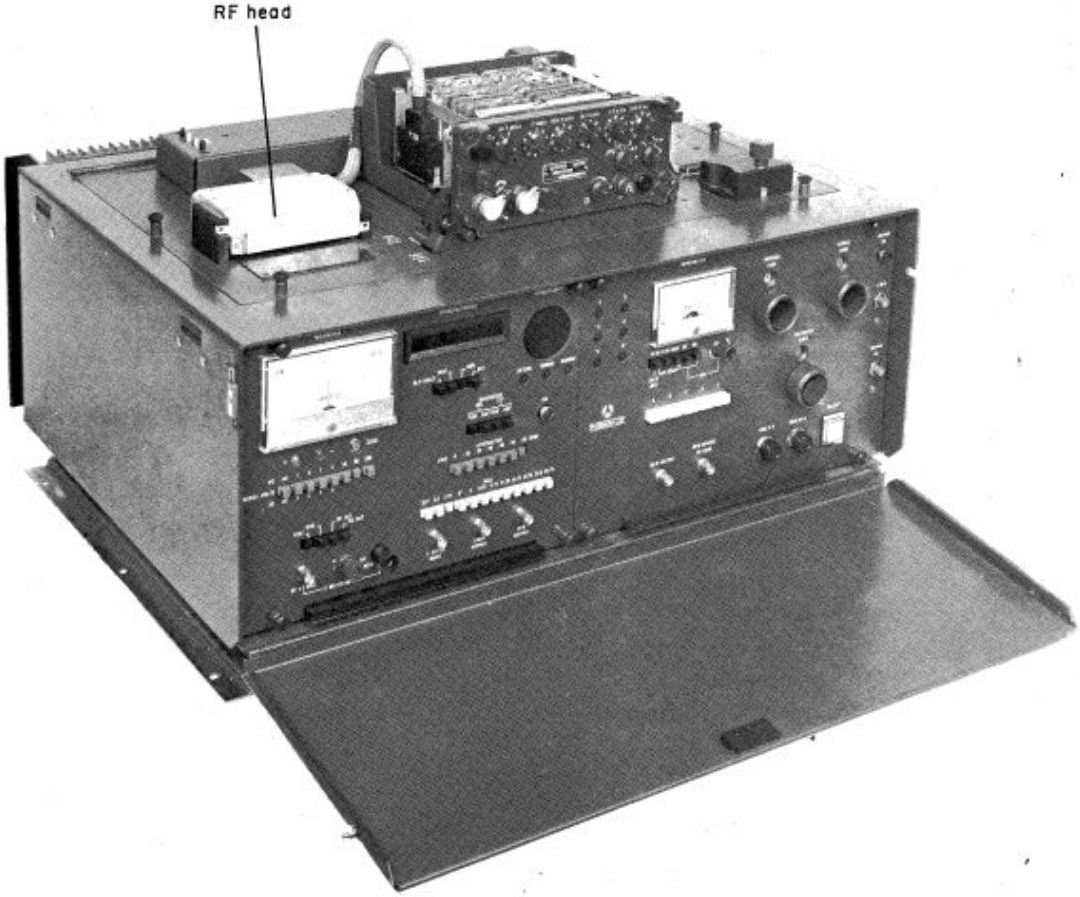

Fig. 3-1

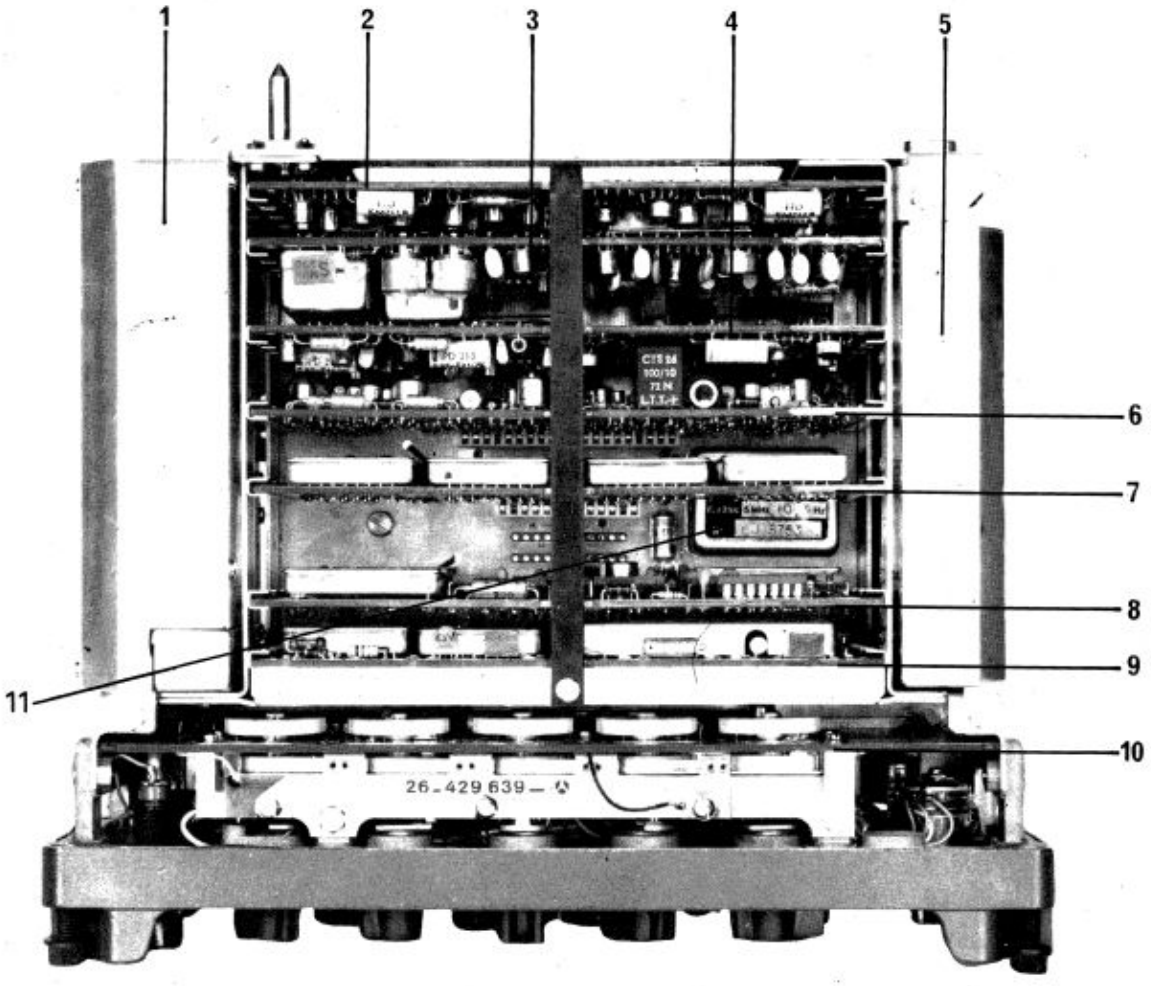

1	HF Head Unit	
2	Peripheral Circuits Board	(purple)
3	Filter and 2.5 MHz Filter Circuit Board	(blue)
4	Exciter Board	(green)
5	Converter Unit	
6	AF Board	(yellow)
7	Synthesizer (Board No. 3)	(orange)
8	Synthesizer (Board No. 2)	(red)
9	Synthesizer (Board No. 1)	(brown)
10	Setting Board	
11	TCXO	

Fig. 3-2

PROCEDURE FOR TEST B1 TO B18

1 - Remove 20 watts amplifier

1-1 - Set the "O, L, H" selector on the transceiver front panel to "0".

1-2 - Put the man-pack transceiver on a flat, clean surface, with front panel facing the operator.

1-3 - Remove the battery unit (see fig. 2-4).

1-4 - Remove the antenna tuning unit :

a) Remove the four fixing screws of the antenna tuning unit by means of the 4 mm Allen key.
b) Withdraw the antenna tuning unit from the transceiver unit, by pulling perpendicularly to the transceiver unit (left to right).
c) Remove the antenna tuning unit.

1-5 - Loosen the four fixing screws of the 20 W amplifier by means of the 4 mm Allen key.

1-6 - Withdraw the 20 W amplifier from the transceiver unit.

1-7 - Remove the 20 W amplifier.

2 - Remove case from transceiver

2-1 - Loosen the four fixing screws on the front panel, by means of the 4 mm Allen key.

2-2 - Remove the transceiver from the case by pulling it out horizontally.

2-3 - Withdraw and remove the seal.

3 - Remove the HF head

3-1 - Loosen both HF head fixing screws by means of the 5 mm screwdriver.

3-2 - Withdraw and remove the 2 fixing screws and washers.

3-3 - Withdraw and remove the HF head.

4 - Put RF head on the test set socket J205 and see fig. 3-1.

5 - Put the hand being in "low" position and put man-pack in its bedding.

The back connector being plugged in, pull back to front the handle ("HIGH" position).

6 - Set the P209 connector on the man-pack RF head socket and see fig. 3-1.

7 - Proceed the tests following (B1 to B18).

TEST B1 - SUPPLY AND CONTROL VOLTAGES IN TRANSMIT MODE

1 – TROUBLESHOOTING FLOWCHART

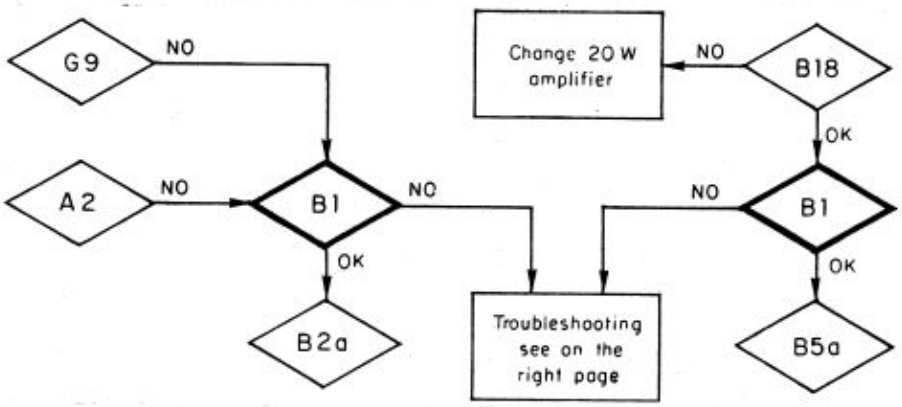

2 – PROCEDURE

2-1 - Prepare set up shown on the right page and see fig. 3-1.

2-2 - Proceed to the tests specified in the page 3-6.

TEST B1

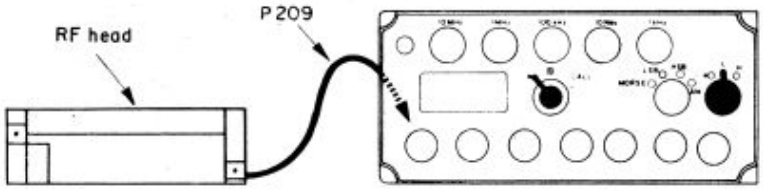
RF head
P209

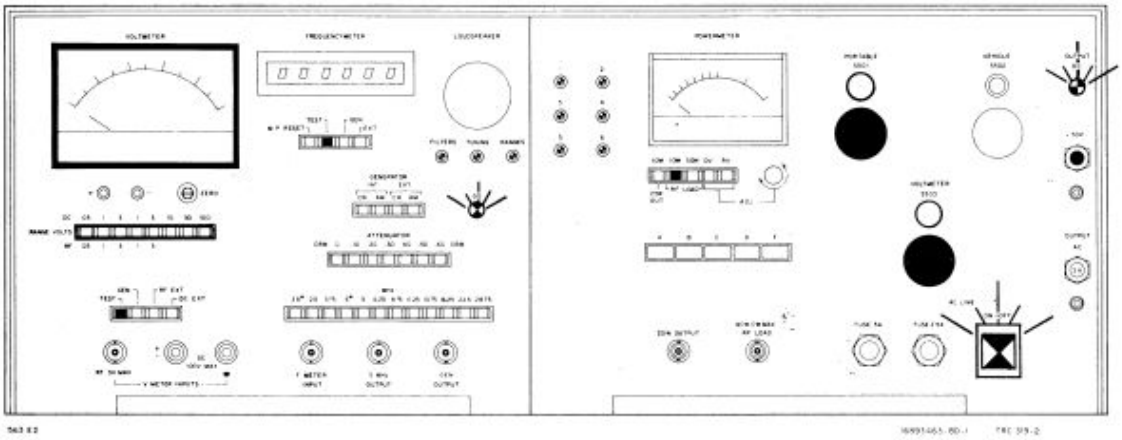
VOLTMETER
FREQUENCYMETER
LOUDSPEAKER
POWERMETER

TEST B1 Continued)

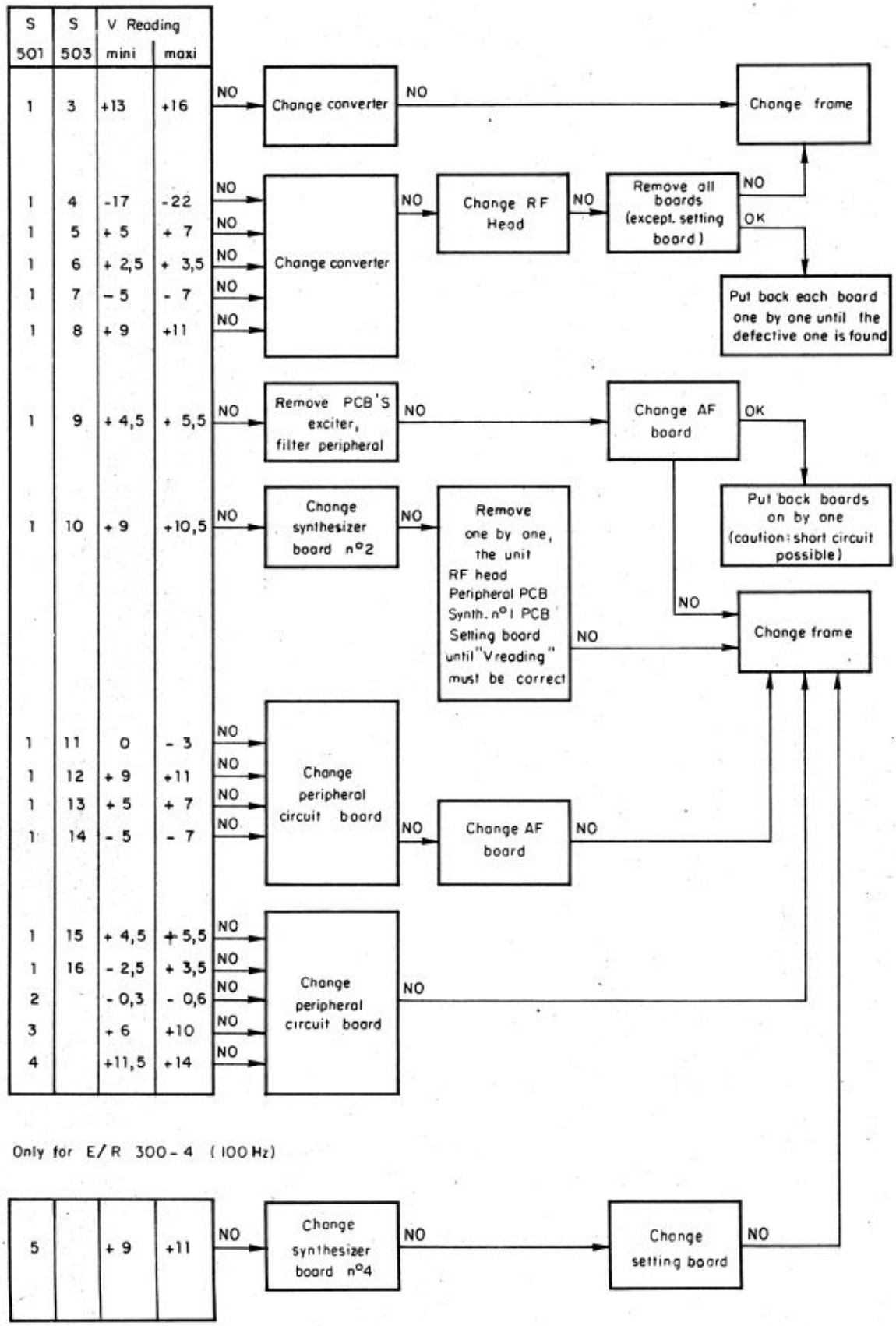

TESTS B2a - B2b - 1 kHz > 0 AND 5 MHz PILOT

1 – TROUBLESHOOTING FLOWCHART

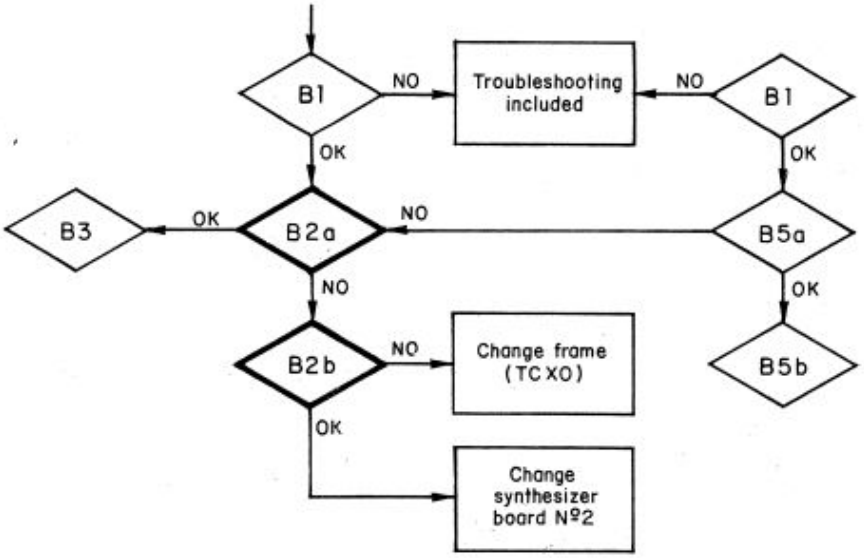

2 – PROCEDURE

2-1 - Prepare set up shown on the right page and see fig. 3-1.

2-2 - Test B2a - 1 kHz > 0

Frequencymeter reading : 1.0 kHz.

2-3 - Test B2b - 5 MHz pilot

Voltmeter reading : 0.02 V mini.

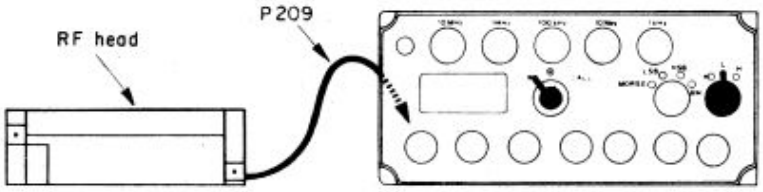
RF head
P209

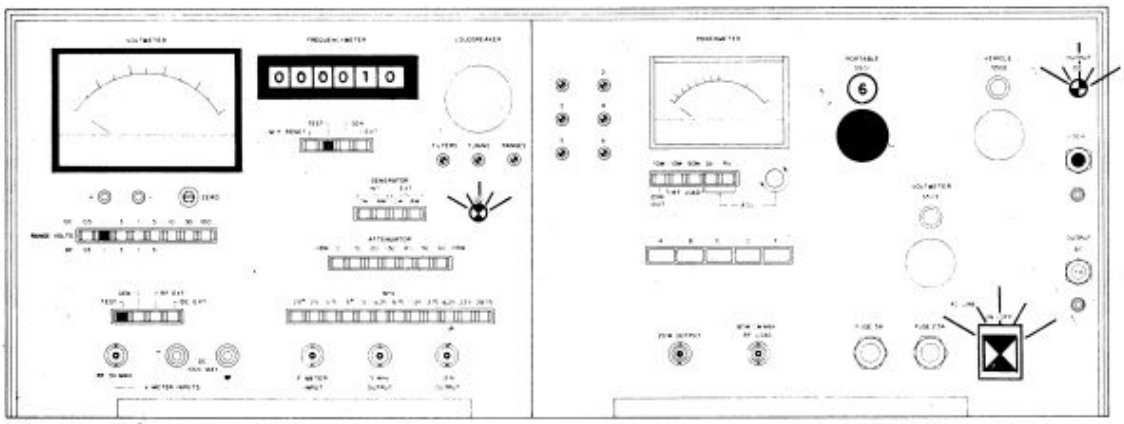
000010

TEST B3 - HETERODYNE SIGNAL 100 OR 105 MHz

1 – TROUBLESHOOTING FLOWCHART

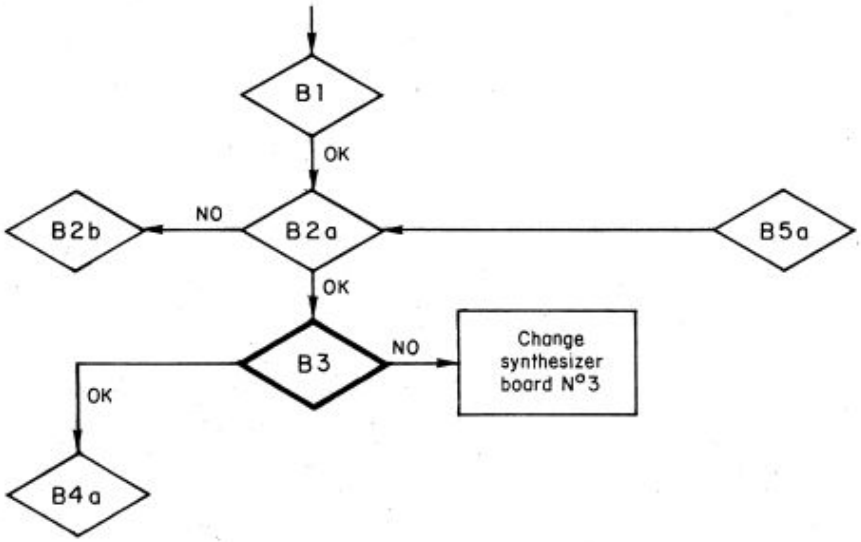

2 – PROCEDURE

2-1 - Prepare set up shown on the right page and see fig. 3-1.

2-2 - Test B3

Man-Pack mode	Frequencymeter reading	Voltmeter reading
MORSE	25000 kHz ± 1 kHz	0.05 V mini
HSB	25000 kHz ± 1 kHz	0.05 V mini
AM	25000 kHz ± 1 kHz	0.05 V mini
LSB	30000 kHz ± 1 kHz	0.05 V mini

TEST B3

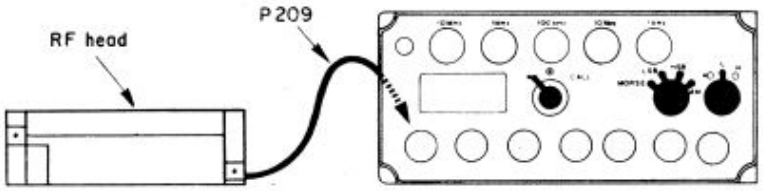
RF head
P209

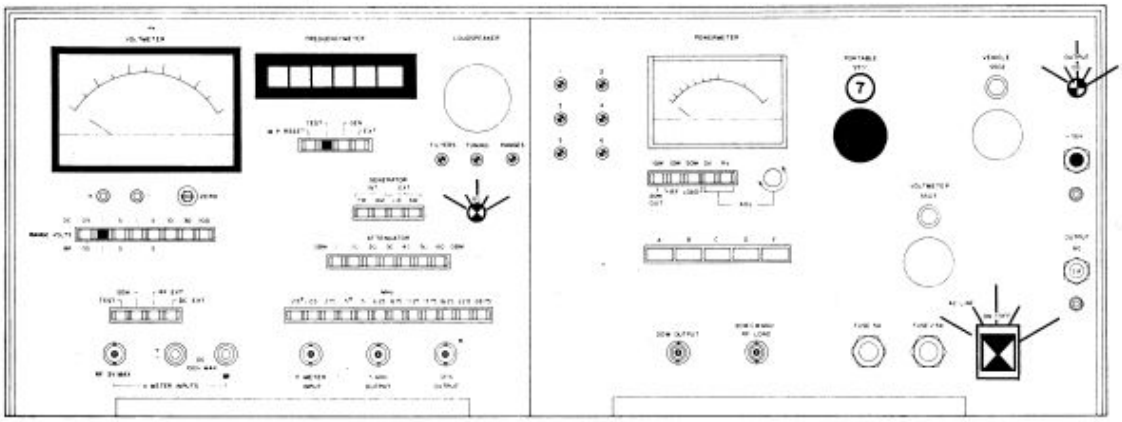
VOLTMETER
FREQUENCYMETER
LOUDSPEAKER
POWERMETER
7

TESTS B4a - B4b - B4c - 2.5 MHz TRANSMISSION

1 – TROUBLESHOOTING FLOWCHART

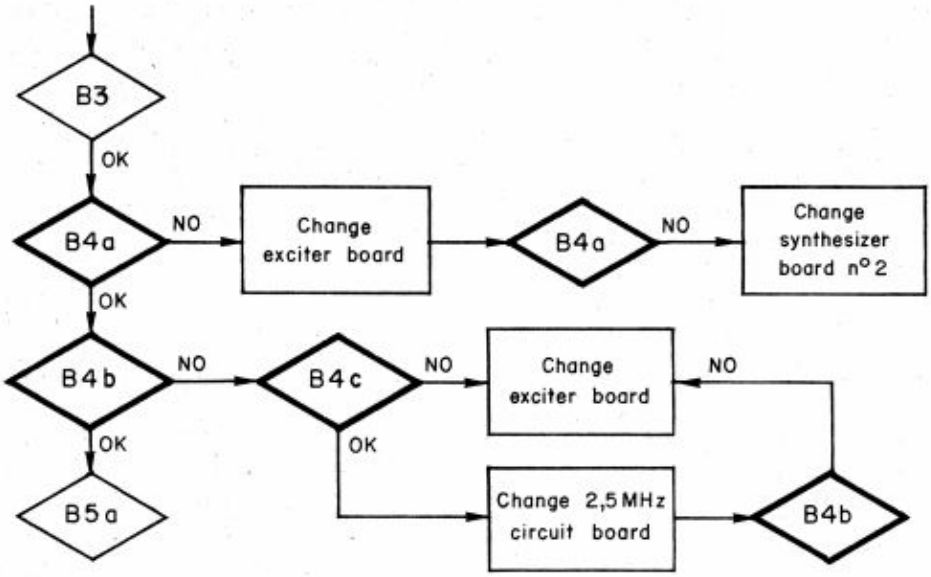

2 – PROCEDURE

2-1 - Prepare set up shown on the right page and see fig. 3-1.

2-2 - Tests

	Man-Pack mode	Frequencymeter reading	Voltmeter reading
TEST B4a	AM	2500 kHz	Indifferent
TEST B4b	MORSE	2499 kHz	Indifferent
TEST B4c	MORSE	2499 kHz	0.02 V mini

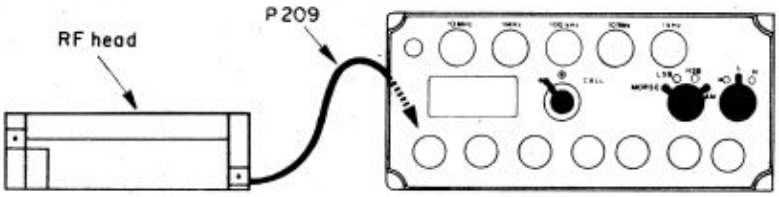
RF head
P209

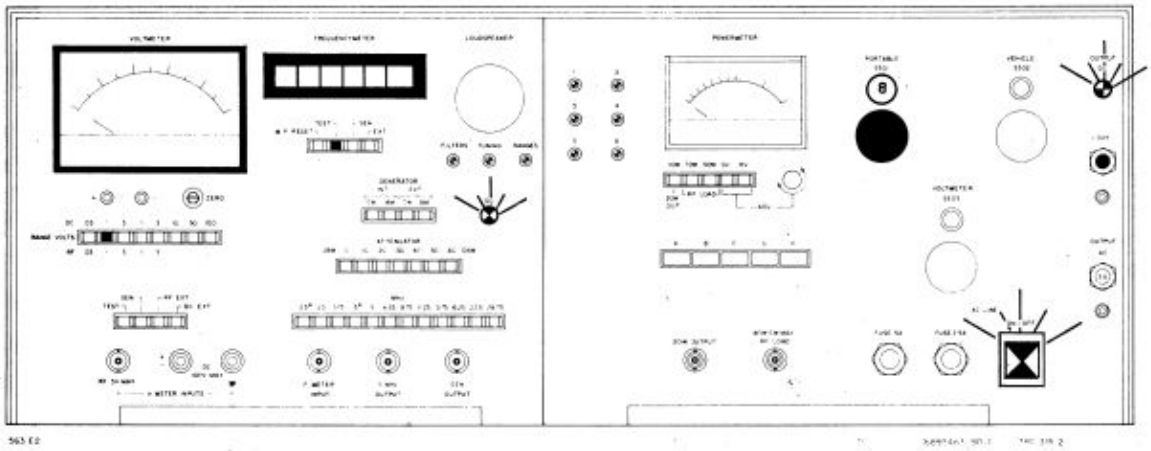
VOLTMETER
FREQUENCYMETER
LOUDSPEAKER
POWERMETER
PORTABLE
VEHICLE
OUTPUT
ZERO
FILTER
TUNING
RANGES
GENERATOR
ATTENUATOR
VOLTMETER
FUSE 1A
FUSE 2A
ON OFF
563 E2

TEST B5a - 1 mW TRANSMISSION

1 – TROUBLESHOOTING FLOWCHART

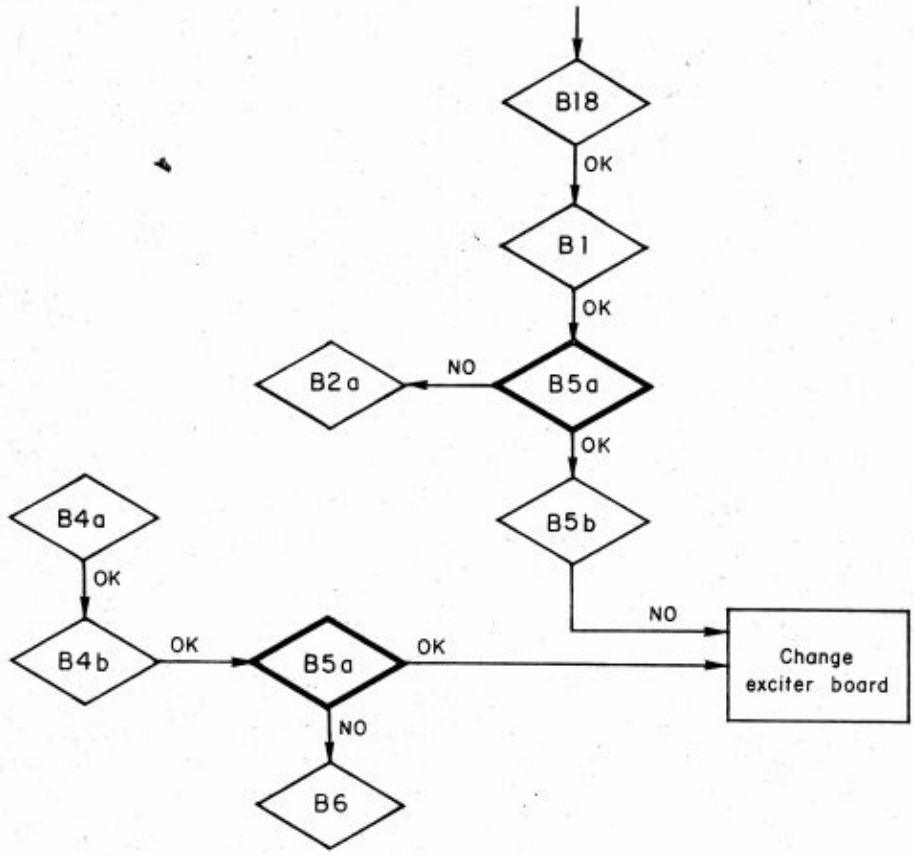

2 – PROCEDURE

2-1 - Prepare set up shown on the right page and see fig. 3-1.

2-2 - Man-Pack setting on the table hereafter :

Man-Pack setting
E/R 300-4
E/R 300-1-2-3
0 2 0 0 0 0
1 9 9 9 9 9
1 1 1 1 1 1
0 2 2 2 2 2
0 3 3 3 3 3
0 4 4 4 4 4
0 5 5 5 5 5
0 6 6 6 6 6
0 7 7 7 7 7
2 8 8 8 8 8
2 9 9 9 9 9
2 0 0 0 0 0

Frequency reading ± 0.1 kHz
Voltmeter reading : 0.2 V mini.

TEST B5a

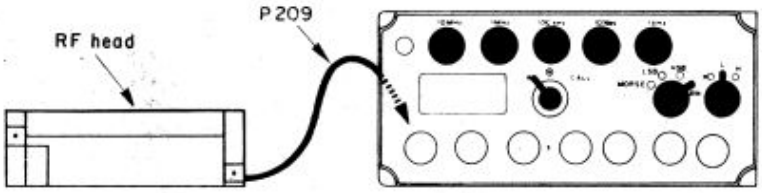
RF head
P209

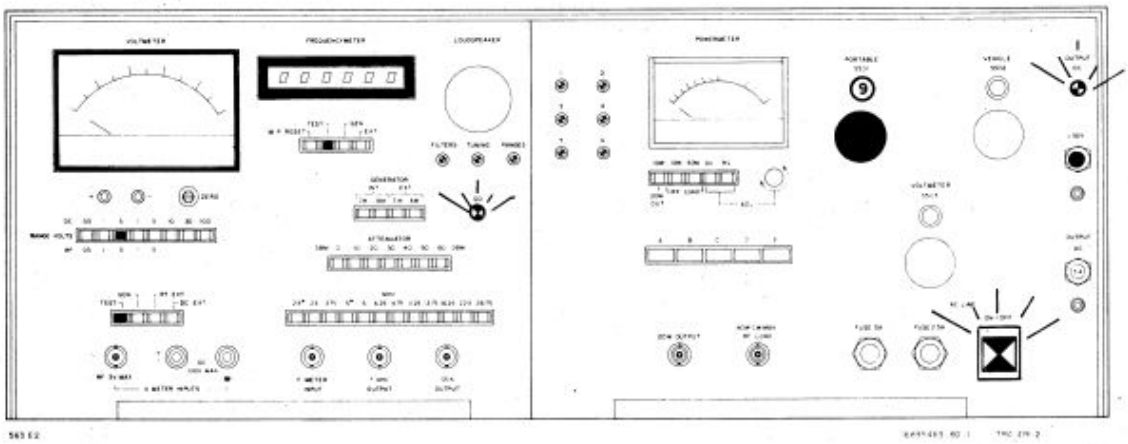
VOLTMETER
FREQUENCYMETER
LOUDSPEAKER
POWERMETER
PORTABLE TEST
VEHICLE MOUNT
9
563 E2

TEST B5b - 1 mW TRANSMISSION

1 – TROUBLESHOOTING FLOWCHART

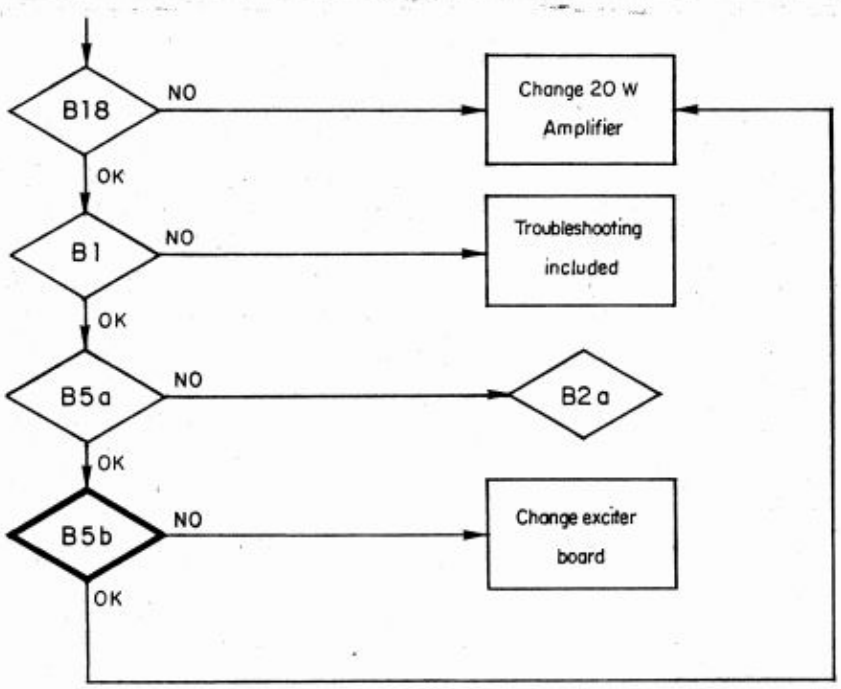

2 – PROCEDURE

2-1 - Prepare set up shown on the right page and see fig. 3-1.

2-2 - Voltmeter reading : 0.01 V max. (inside specified zone).

TEST B5b

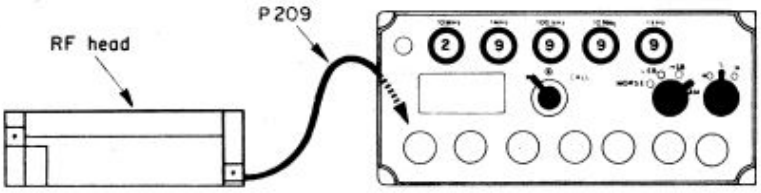
RF head
P 209

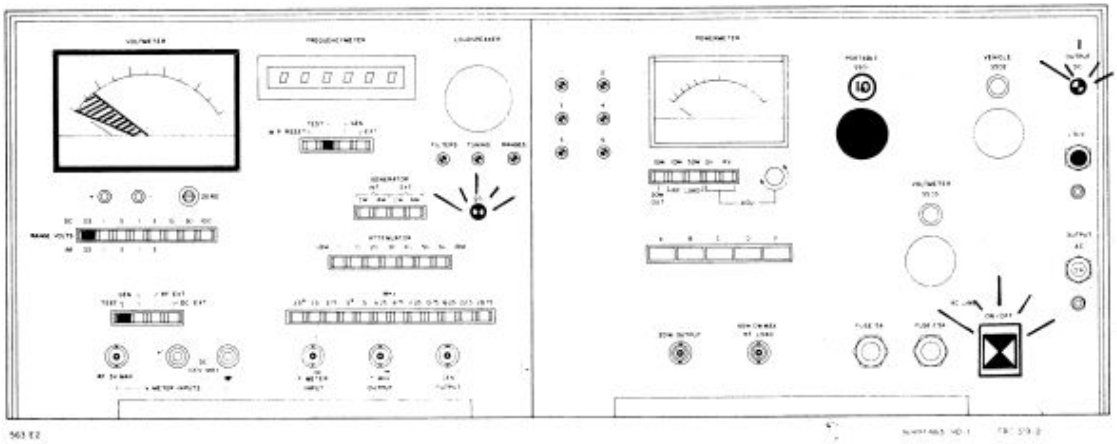
VOLTMETER
FREQUENCYMETER
LOUDSPEAKER
POWERMETER
563 E2

TEST B6 - CONTROL OF VCO (OPENED LOOP) - UPPER SIDE BAND (US) AND LOWER SIDE BAND (LS) CHECK

1 – TROUBLESHOOTING FLOWCHART

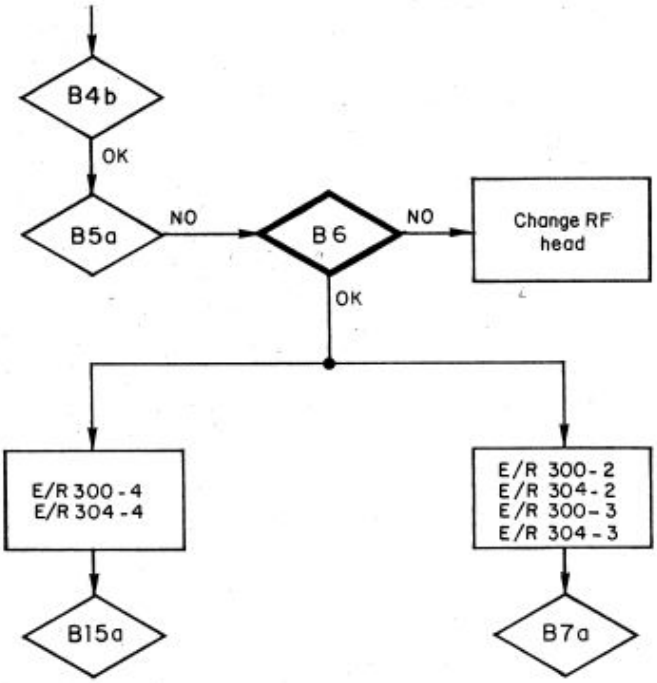

2 – PROCEDURE

2-1 - Prepare set up shown on the right page and see fig. 3-1.

2-2 - NOTE : Wait 4 or 5 seconds before measurements.

S501	F meter reading	V meter reading
11 High of LS*	> 22000 kHz	0.25 V mini.
12 Low of US*	> 19000 kHz	0.25 V mini.
13 High of US	> 31000 kHz	0.2 V mini.

* LS and US : Lower side band and upper side band.

TEST B6

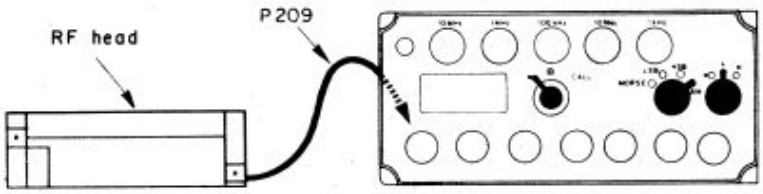

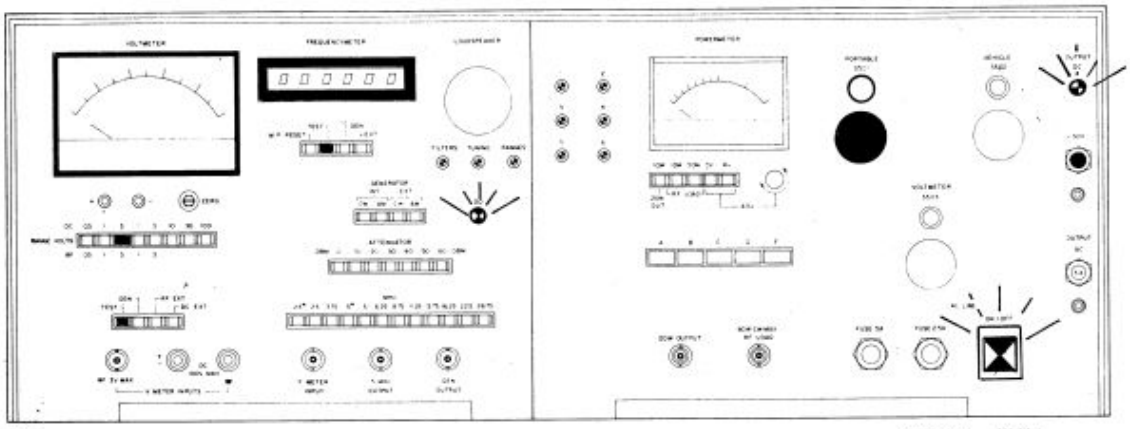

TEST B7a · B7b · B7c · SYNTHESIZER SECONDARY LOOP

1 – TROUBLESHOOTING FLOWCHART

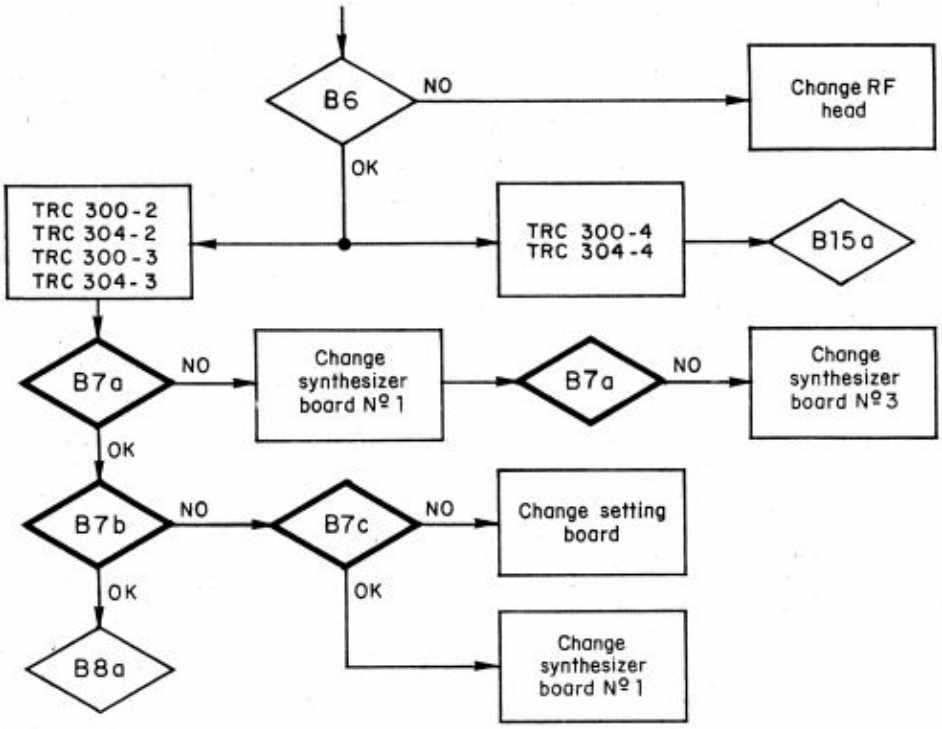

2 – PROCEDURE

2-1 · Prepare set up shown on the right page and see fig. 3-1.

Frequencymeter's selector (S405 · item 23) on "TEST".

2-2 · Test B7a

The frequencymeter reading is different than zero.

2-3 · Test B7b

Frequencymeter reading (see on the following table).

2-4 · Test B7c

Frequencymeter's selector (S405 · item 23) on "MP RESET" and read on the frequencymeter (see table hereafter).

Man-Pack setting	Frequency reading
0 2 0 0 0	500
0 2 1 1 1	611
0 2 2 2 2	522
0 2 3 3 3	633
0 2 4 4 4	544
0 2 5 5 5	655
0 2 6 6 6	566
0 2 7 7 7	677
0 2 8 8 8	588
0 2 9 9 9	699

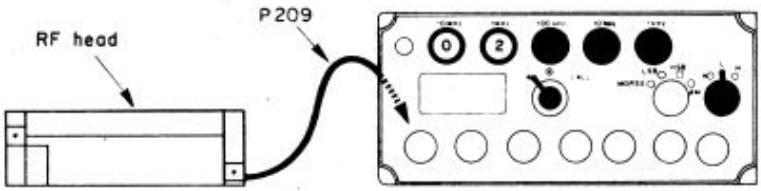
RF head
P209

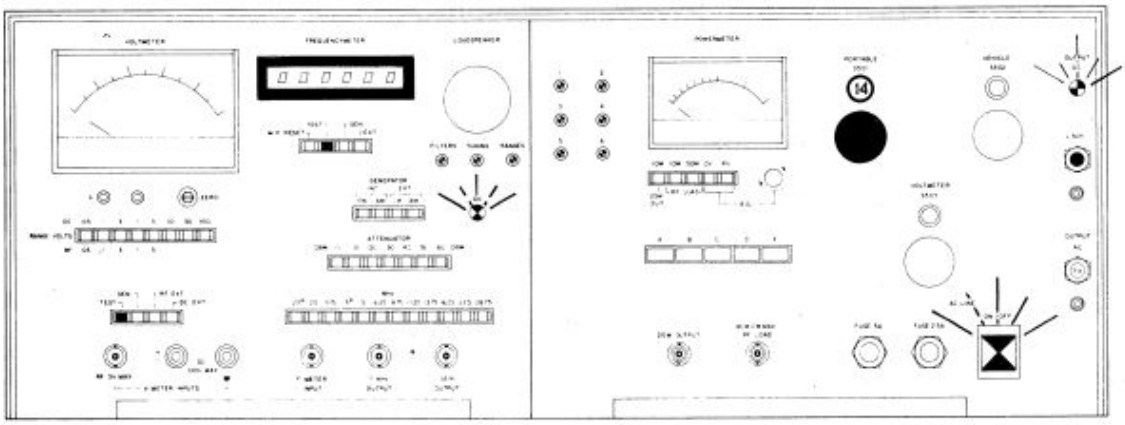

TESTS B8a - B8b - SYNTHESIZER MAIN LOOP

1 – TROUBLESHOOTING FLOWCHART

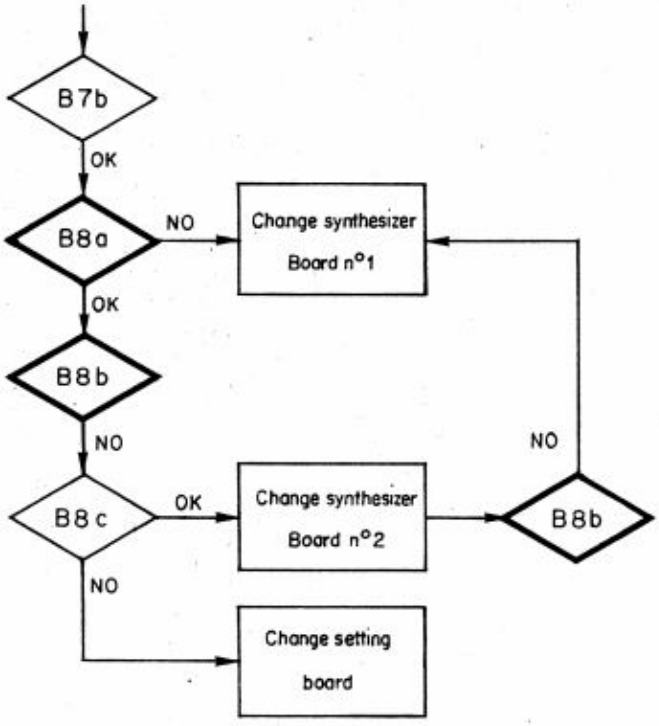

Man-Pack setting	Frequency reading
0 2 0 0 0	100
0 3 0 0 0	125
0 4 0 0 0	150
0 5 0 0 0	175
0 6 0 0 0	200
0 7 0 0 0	225
0 8 0 0 0	250
0 9 0 0 0	275
1 0 0 0 0	300
1 1 0 0 0	325
1 2 0 0 0	350
1 3 0 0 0	375
1 4 0 0 0	400
1 5 0 0 0	425
1 6 0 0 0	450
1 7 0 0 0	475
1 8 0 0 0	500
1 9 0 0 0	525
2 0 0 0 0	550
2 1 0 0 0	575
2 2 0 0 0	600
2 3 0 0 0	625
2 4 0 0 0	650
2 5 0 0 0	675
2 6 0 0 0	700
2 7 0 0 0	725
2 8 0 0 0	750
2 9 0 0 0	775

2 – PROCEDURE

2-1 - Prepare set up shown on the right page and see fig. 3-1.

2-2 - Test B8a

The frequency reading is different than zero.

2-3 - Test B8b

Frequencymeter reading : see table on this page.

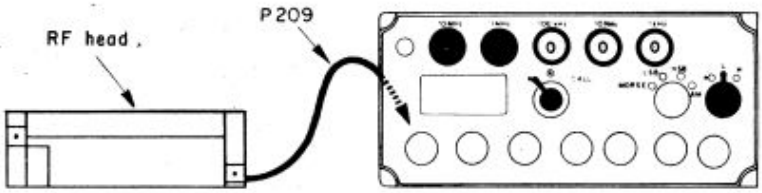
RF head
P209

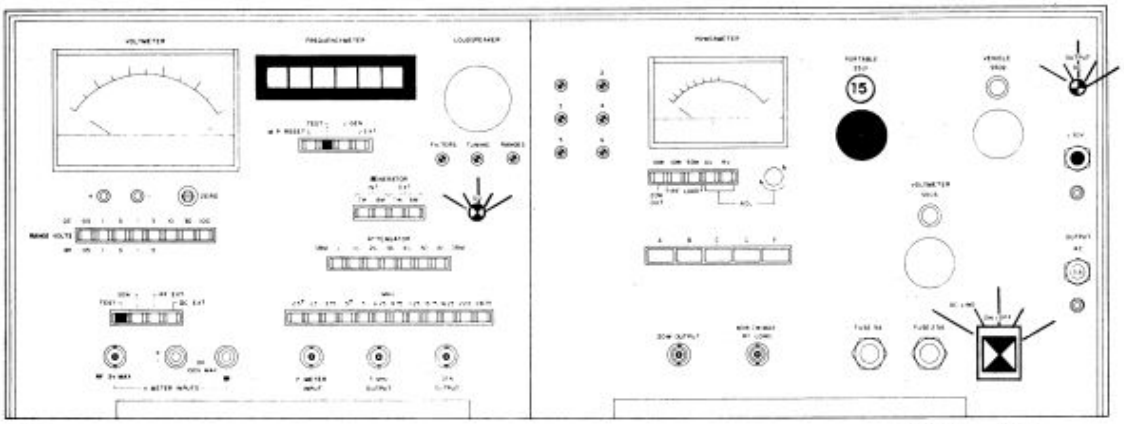
VOLTMETER
FREQUENCIMETER
LOUDSPEAKER
PORTABLE TEST
15
VEHICLE VIEW
VOLTMETER VIEW
563 E2

TEST B8c - SYNTHESIZER MAIN LOOP

1 – TROUBLESHOOTING FLOWCHART

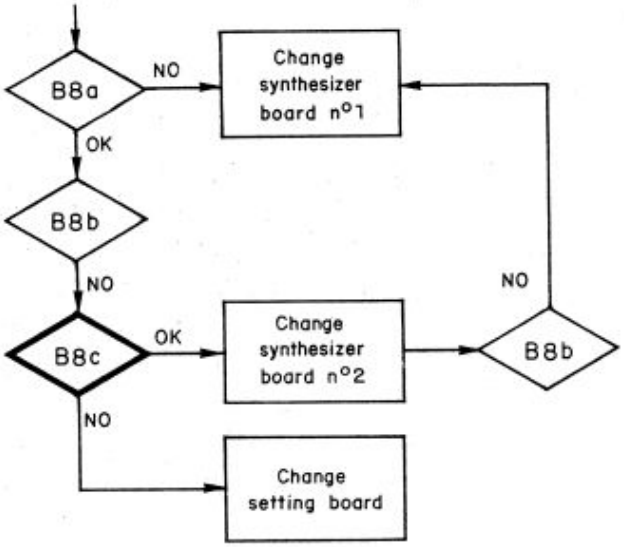

Man-Pack setting	Frequency reading
0 2 0 0 0	4
0 3 0 0 0	5
0 4 0 0 0	6
0 5 0 0 0	7
0 6 0 0 0	8
0 7 0 0 0	9
0 8 0 0 0	10
0 9 0 0 0	11
1 0 0 0 0	12
1 1 0 0 0	13
1 2 0 0 0	14
1 3 0 0 0	15
1 4 0 0 0	16
1 5 0 0 0	17
1 6 0 0 0	18
1 7 0 0 0	19
1 8 0 0 0	20
1 9 0 0 0	21
2 0 0 0 0	22
2 1 0 0 0	23
2 2 0 0 0	24
2 3 0 0 0	25
2 4 0 0 0	26
2 5 0 0 0	27
2 6 0 0 0	28
2 7 0 0 0	29
2 8 0 0 0	30
2 9 0 0 0	31

2 – PROCEDURE

2-1 · Prepare set up shown on the right page and see fig. 3-1.

2-2 · Frequencymeter reading : see table on this page.

2-3 · Voltmeter reading : see table hereunder.

Man-Pack setting	Voltmeter reading
0 2 0 0 0	0
0 2 1 0 0	0
0 2 2 0 0	+ 1.5 to + 2.5 V
0 2 3 0 0	+ 1.5 to + 2.5 V
0 2 4 0 0	+ 4 to + 5 V
0 2 5 0 0	+ 4 to + 5 V
0 2 6 0 0	+ 6 to + 7.5 V
0 2 7 0 0	+ 6 to + 7.5 V
0 2 8 0 0	+ 9 to + 10.5 V
0 2 9 0 0	+ 9 to + 10.5 V

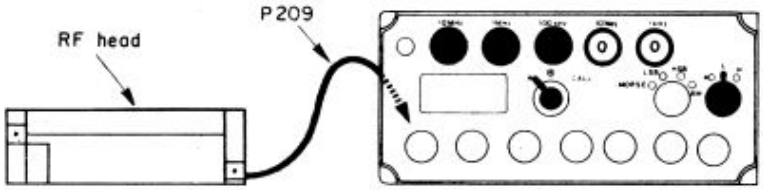
RF head
P209

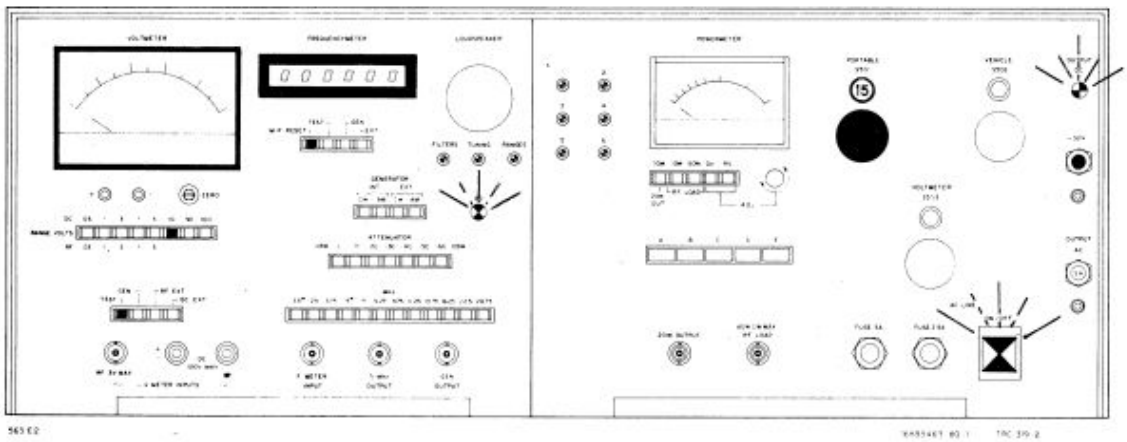
563 E2

TEST B9 - SUPPLY AND CONTROL VOLTAGE IN RECEIVE MODE

1 – TROUBLESHOOTING FLOWCHART

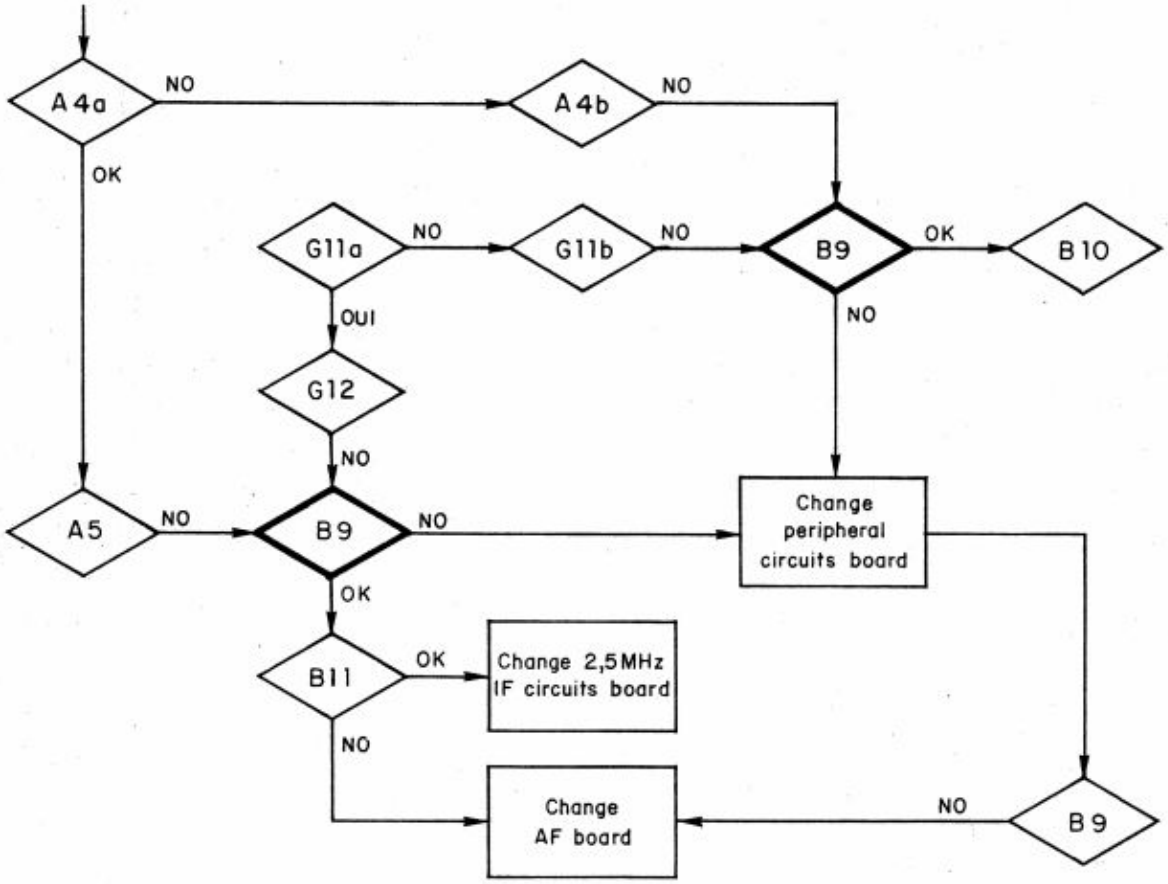

2 – PROCEDURE

2-1 - Prepare set up shown on the right page and see fig. 3-1.

2-2 - Proceed to the tests specified in the table hereunder :

S503	Voltmeter reading
11	+ 9 V to + 11 V
12	0
13	+ 1.8 V maxi.
14	+ 6.5 V to + 8 V
15	+ 1.5 V maxi.
16	0

TEST B9

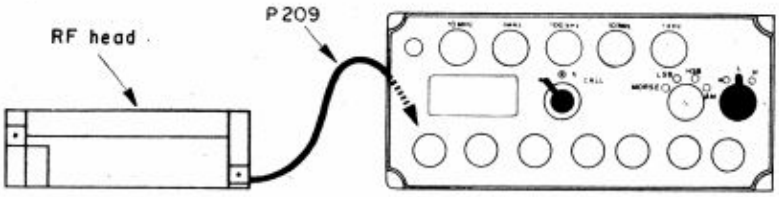
RF head
P209

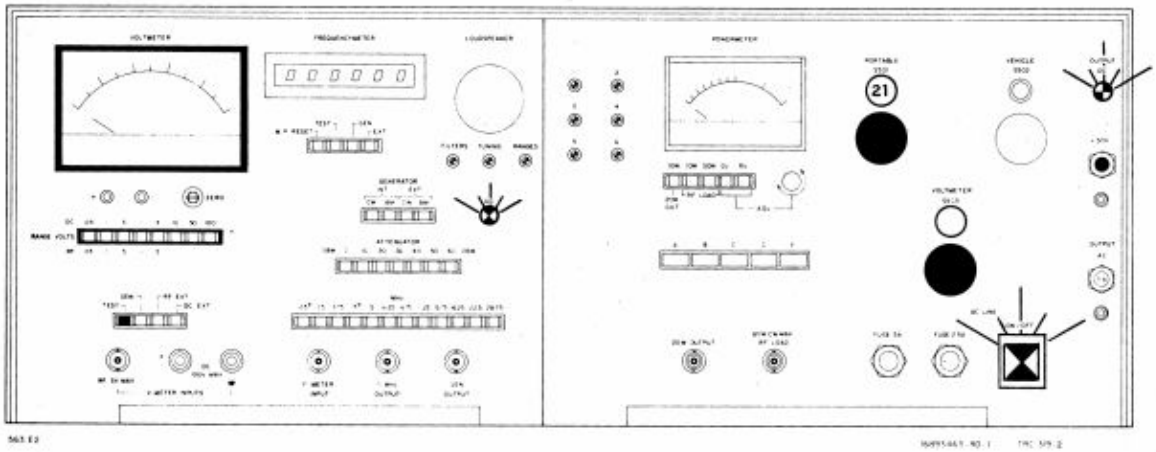
VOLTMETER
FREQUENCYMETER
LOUDSPEAKER
POWERMETER
21

TEST B10 - RECEIVER GENERAL TEST WITHOUT 20 W AMPLIFIER

1 – TROUBLESHOOTING FLOWCHART

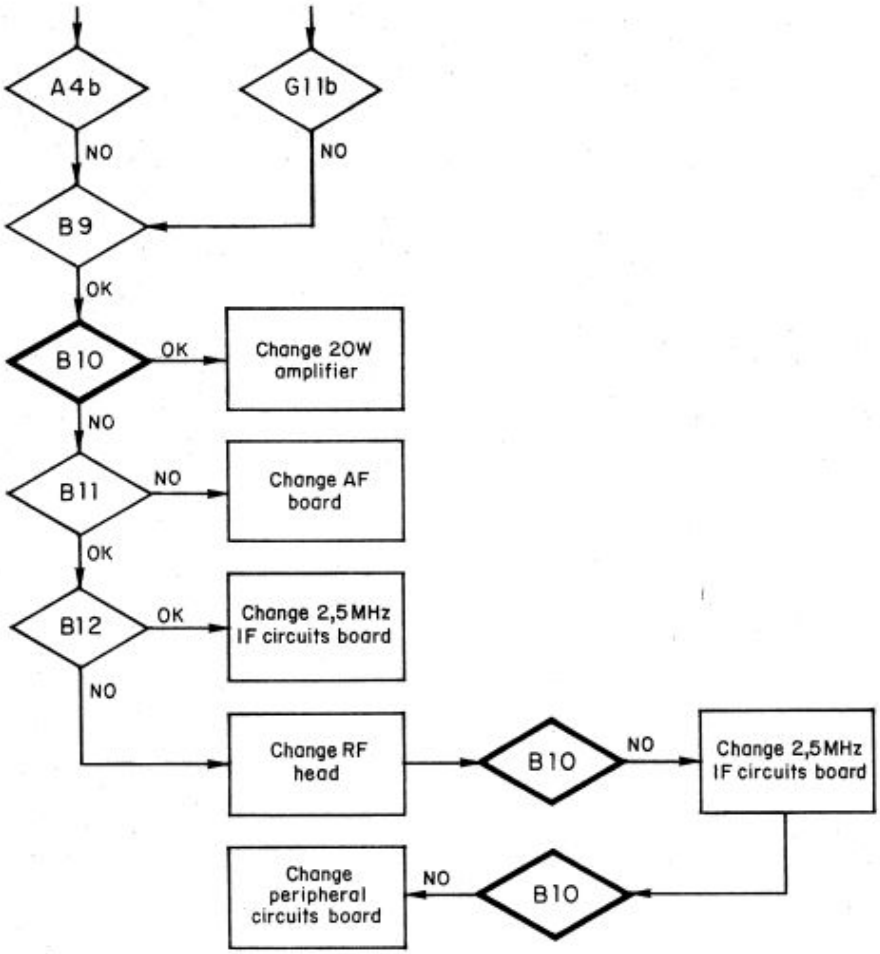

2 – PROCEDURE

2-1 - Prepare set up shown on the right page and see fig. 3-1.

2-2 - By tuning clockwise the AF control of the Man-Pack, verify that the voltmeter reading can reach + 2 V and return to + 1.5 V.

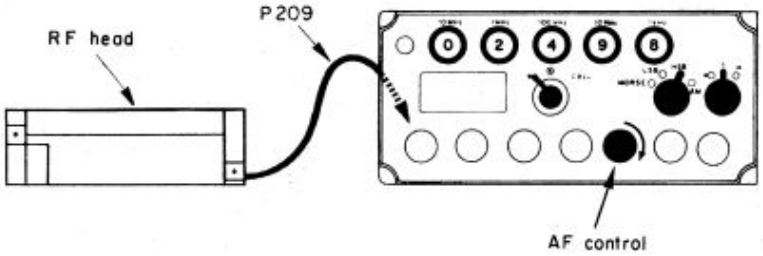
RF head
P209
AF control

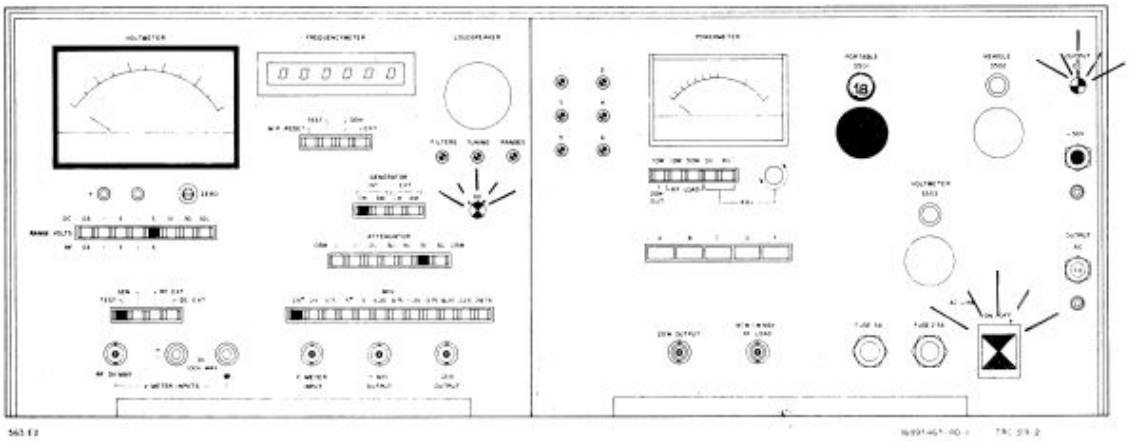

TEST B11 - AF BOARD

1 – TROUBLESHOOTING FLOWCHART

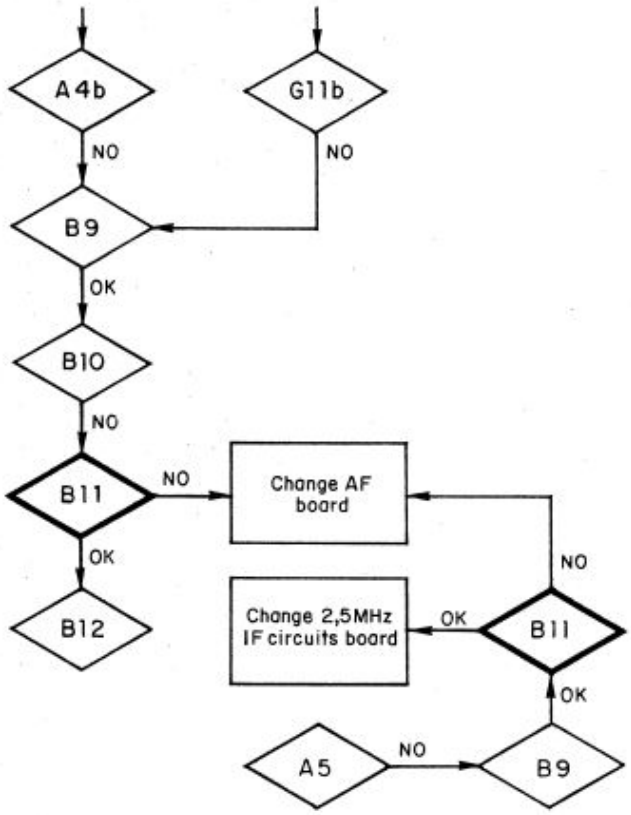

2 – PROCEDURE

2-1 - Prepare set up shown on the right page and see fig. 3-1.

2-2 - Set Man-Pack to MORSE mode

Adjust the AF control of the Man-Pack to set + 2 V on the voltmeter.

2-3 - Set Man-Pack to LSB mode

Identical operation as MORSE mode.

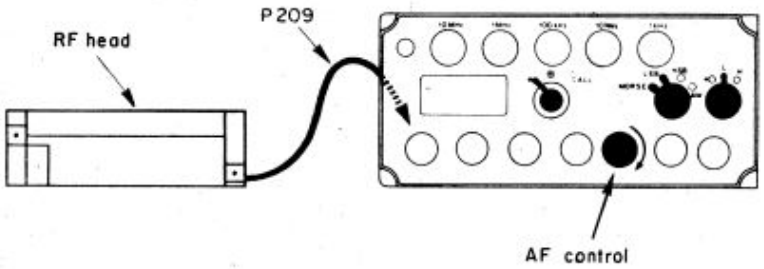
RF head
P209
AF control

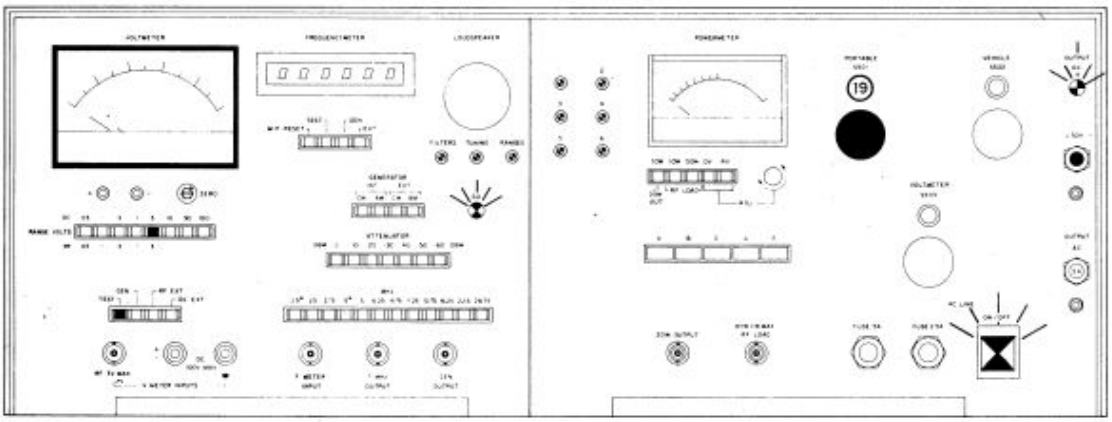
VOLTMETER
FREQUENCYMETER
LOUDSPEAKER
POWERMETER
GENERATOR
ATTENUATOR
VOLTMETER
19
563 E2

TEST B12 - AGC CONTROL VOLTAGE

1 – TROUBLESHOOTING FLOWCHART

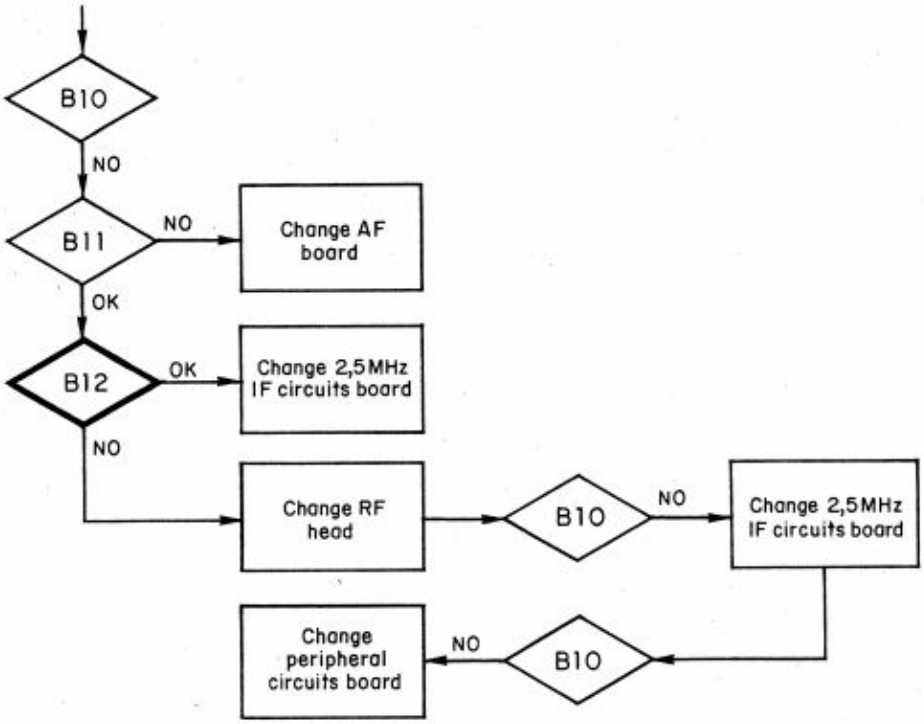

2 – PROCEDURE

2-1 - Prepare set up shown on the right page and see fig. 3-1.

2-2 - Attenuator on 0 dBm : voltmeter reading : + 3 V to + 5 V.

2-3 - Attenuator on – 60 dB : same voltmeter reading – 1 dB.

TEST B12

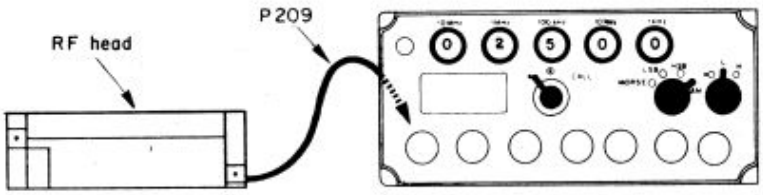
RF head
P209

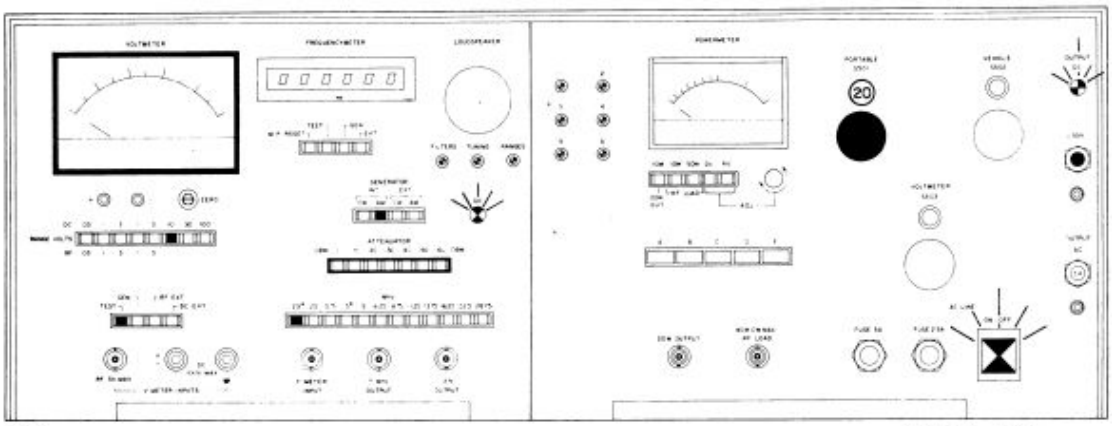
VOLTMETER
FREQUENCYMETER
LOUDSPEAKER
POWERMETER
563 E2

TEST B13 - B14 - PRESET DISPLAY ANTENNA TUNING AND RANGES CONTROL

1 – TROUBLESHOOTING FLOWCHART

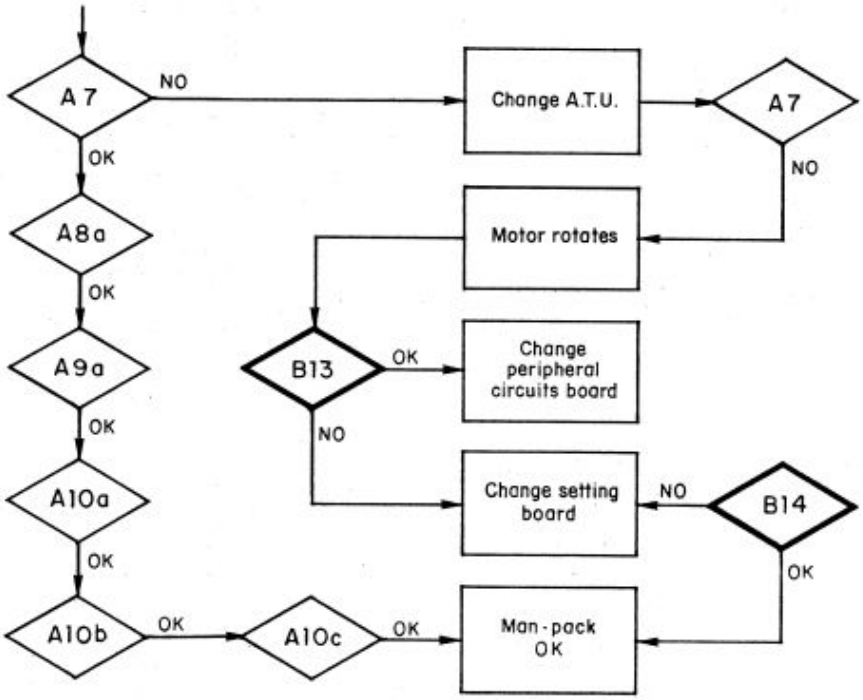

2 – PROCEDURE

2-1 - Prepare set up shown on the right page and see fig. 3-1.

2-2 - Test B13

Voltmeter reading : see table, hereunder

Man-Pack setting	Voltmeter reading
E/R 300-4	
E/R 300-1-2-3	
0 2 0 0 0 0	+ 3 V to + 3.3 V
0 2 5 0 0 0	+ 2.9 V to + 3.2 V
0 3 0 0 0 0	+ 2.6 V to + 2.9 V
0 4 0 0 0 0	+ 2.4 V to + 2.6 V
0 8 0 0 0 0	+ 2.1 V to + 2.4 V
1 0 0 0 0 0	+ 1.8 V to + 2.1 V

2-3 - Test B14

The "RANGES" indicator must be alight for 12 frequencies (see table on the opposite page).

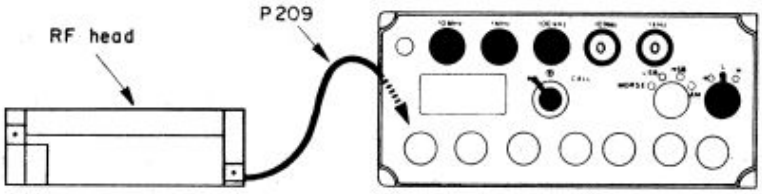

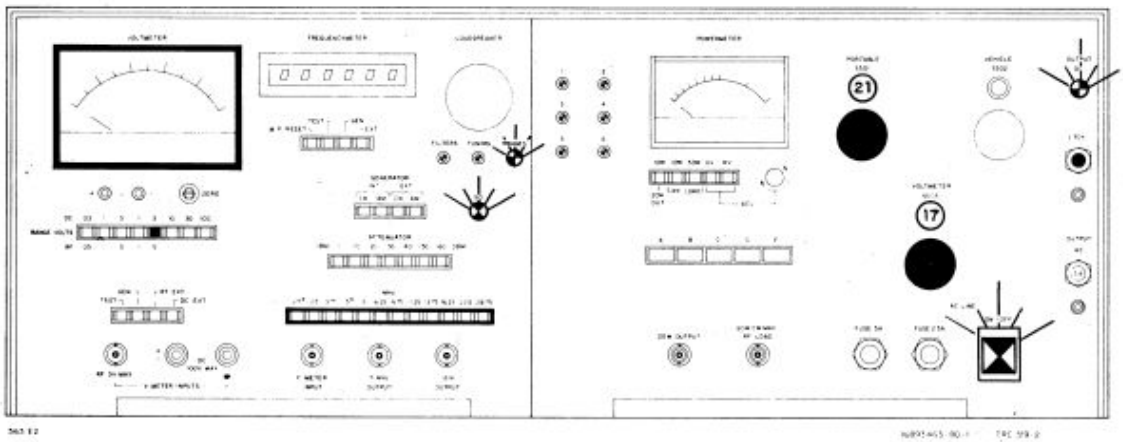

Man-Pack setting	Generator setting
E/R 300-4	
E/R 300-1-2-3	
0 2 0 0 0 0	2.5 *
0 2 5 0 0 0	2.5
0 3 5 0 0 0	3.75
0 4 5 0 0 0	5 *
0 5 5 0 0 0	5
0 6 5 0 0 0	6.25
0 8 5 0 0 0	8.75
1 1 5 0 0 0	11.25
1 3 5 0 0 0	13.75
1 6 5 0 0 0	16.25
2 2 5 0 0 0	22.5
2 8 5 0 0 0	28.75

TESTS B15a - B15b - B15c - SYNTHESIZER TERTIARY LOOP S501-16

1 – TROUBLESHOOTING FLOWCHART

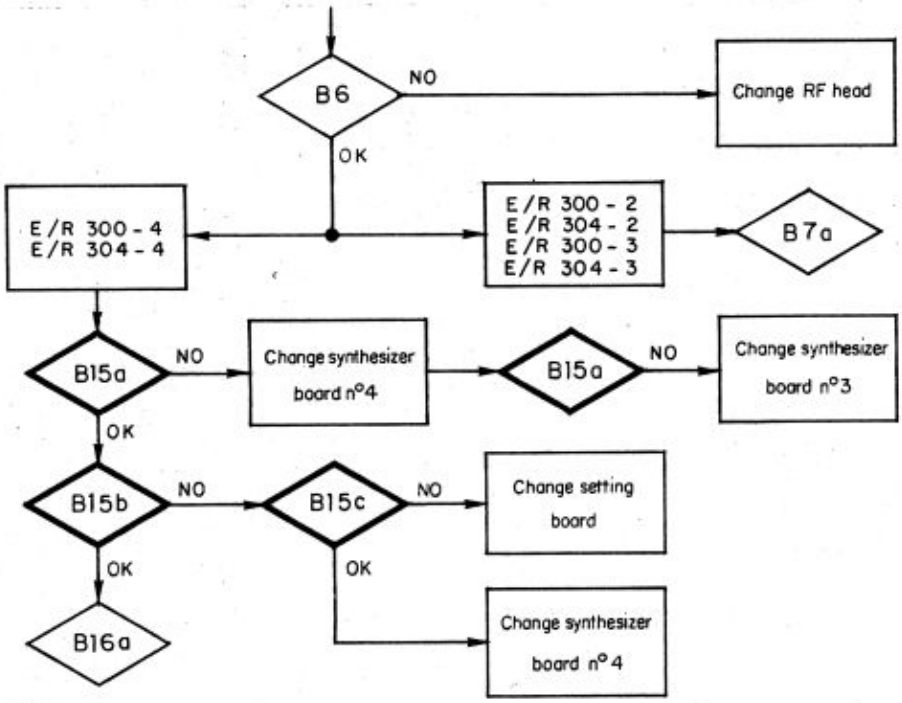

2 – PROCEDURE

2-1 - Prepare set up shown on the right page and see fig. 3-1.
Set the frequency selector S405 (item 23) on "TEST".

2-2 - Test B15a
The frequencymeter reading is different than zero.

2-3 - Test B15b
Frequency reading : see table on the opposite.

2-4 - Test B15c
Frequencymeter selector S405 (item 23) on "MP RESET".
Frequency reading : see table hereunder.

Man-Pack setting	Frequency reading
0 2 0 0 0 . 0	780.0
0 2 0 0 0 . 1	779.0
0 2 0 0 0 . 2	778.0
0 2 0 0 0 . 3	777.0
0 2 0 0 0 . 4	776.0
0 2 0 0 0 . 5	775.0
0 2 0 0 0 . 6	774.0
0 2 0 0 0 . 7	773.0
0 2 0 0 0 . 8	772.0
0 2 0 0 0 . 9	771.0

Man-Pack setting	Frequency reading
0 2 0 0 0 . 0	78.0
0 2 0 0 0 . 1	77.9
0 2 0 0 0 . 2	77.8
0 2 0 0 0 . 3	77.7
0 2 0 0 0 . 4	77.6
0 2 0 0 0 . 5	77.5
0 2 0 0 0 . 6	77.4
0 2 0 0 0 . 7	77.3
0 2 0 0 0 . 8	77.2
0 2 0 0 0 . 9	77.1

TESTS B15a - B15b - B15c

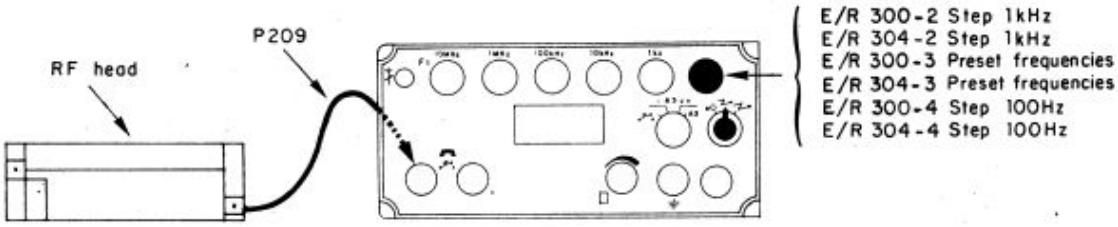

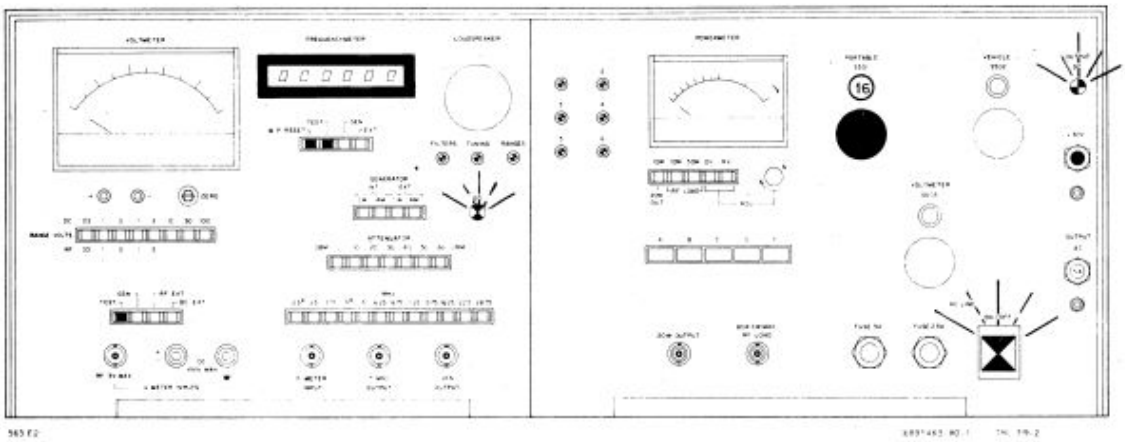

TESTS B16a - B16b - B16c - SYNTHESIZER SECONDARY LOOP (S501-17)

1 – TROUBLESHOOTING FLOWCHART

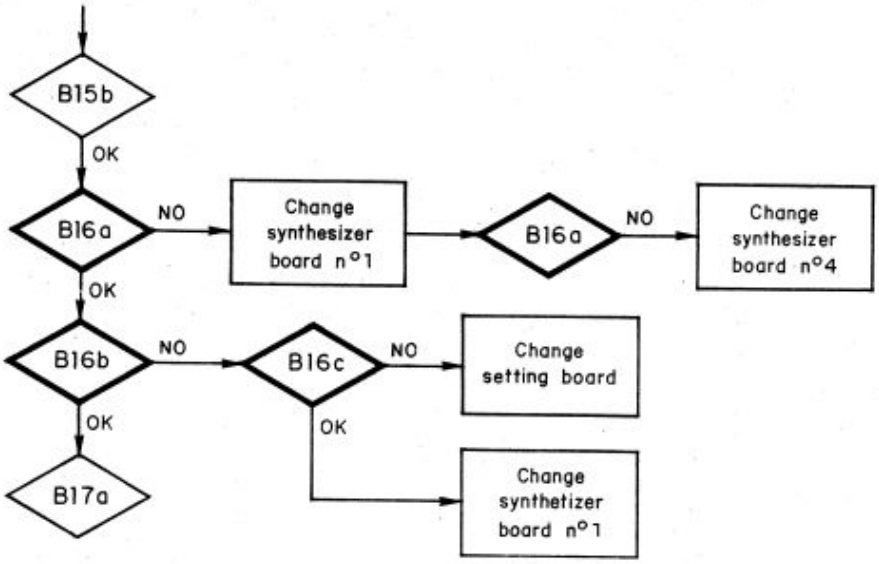

2 – PROCEDURE

2-1 - Prepare set up shown on the right page and see fig. 3-1.

Set the frequencymeter selector S405 (item 23) on "TEST".

2-2 - Test B16a

The frequencymeter reading is different than zero.

2-3 - Test B16b

Frequency reading : see table hereunder.

2-4 - Test B16c

Set the frequencymeter selector S405 (item 23) on "MP RESET".

Frequency reading : see table on the right page.

Man-Pack setting	Frequencymeter reading
0 2 0 0 0 . 0	578.0
0 2 1 1 1 . 0	689.0
0 2 2 2 2 . 0	600.0
0 2 3 3 3 . 0	711.0
0 2 4 4 4 . 0	622.0
0 2 5 5 5 . 0	733.0
0 2 6 6 6 . 0	644.0
0 2 7 7 7 . 0	755.0
0 2 8 8 8 . 0	666.0
0 2 9 9 9 . 0	777.0

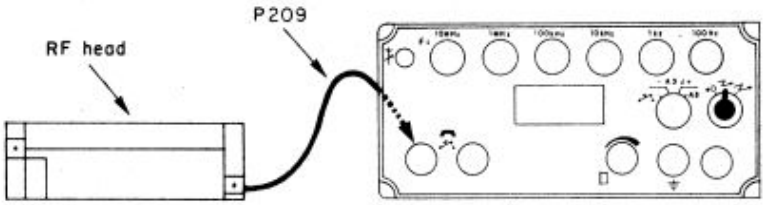
P209
RF head

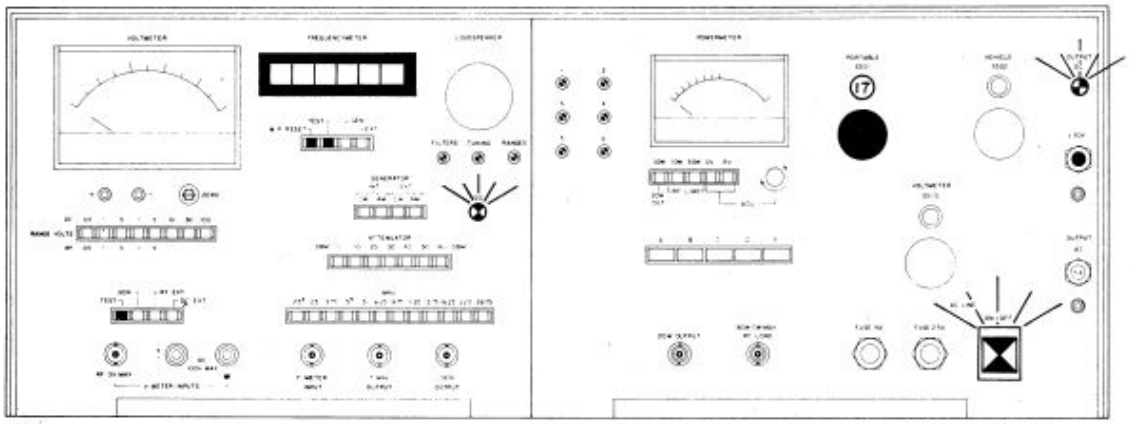
VOLTMETER
FREQUENCYMETER
POWERMETER

TESTS B17a - B17b - SYNTHESIZER MAIN LOOP

1 – TROUBLESHOOTING FLOWCHART

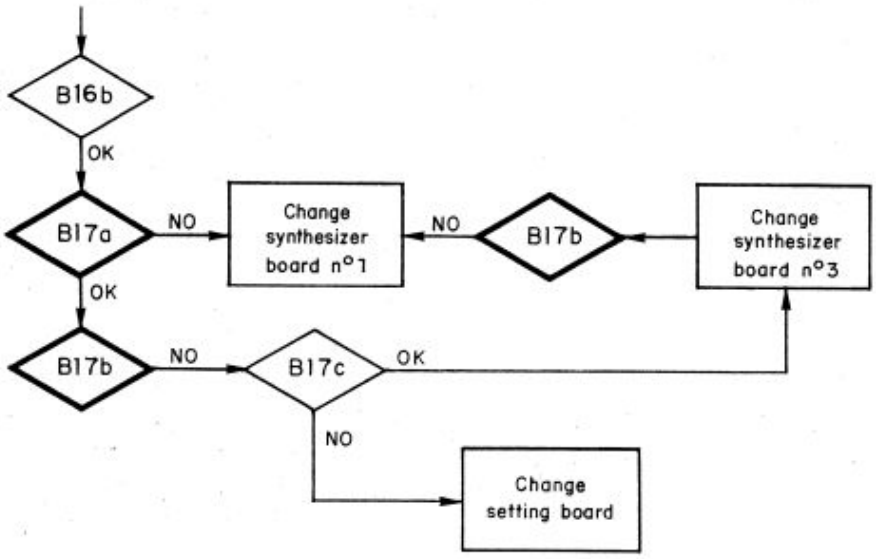

2 – PROCEDURE

2-1 - Prepare set up shown on the right page and see fig. 3-1.

2-2 - Test B17a

The frequencymeter reading is different than zero.

2-3 - Test B17b

Frequencymeter reading : see table hereunder.

Man-Pack setting	Frequencymeter reading
0 2 0 0 0 . 0	100.0
0 3 0 0 0 . 0	125.0
0 4 0 0 0 . 0	150.0
0 6 0 0 0 . 0	200.0
1 0 0 0 0 . 0	300.0
1 1 0 0 0 . 0	325.0
1 7 0 0 0 . 0	475.0
1 8 0 0 0 . 0	500.0
2 5 0 0 0 . 0	675.0
2 9 0 0 0 . 0	775.0

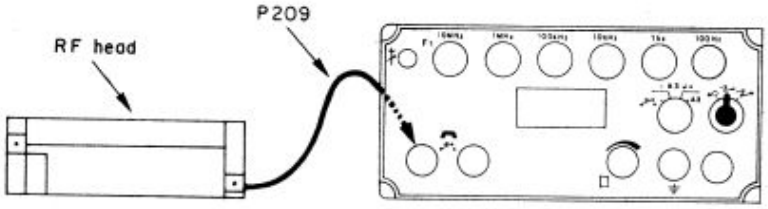
RF head
P209

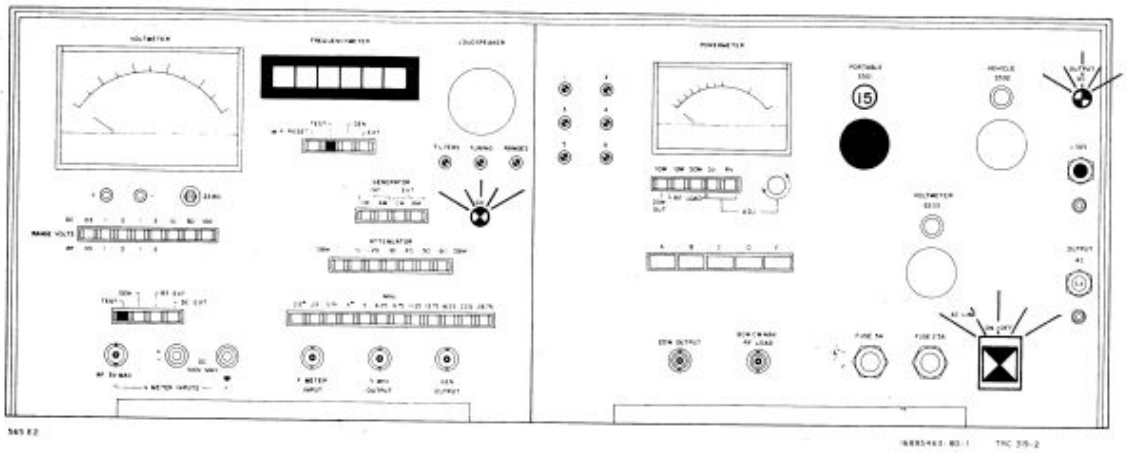

TEST B17c - SYNTHESIZER MAIN LOOP

1 – TROUBLESHOOTING FLOWCHART

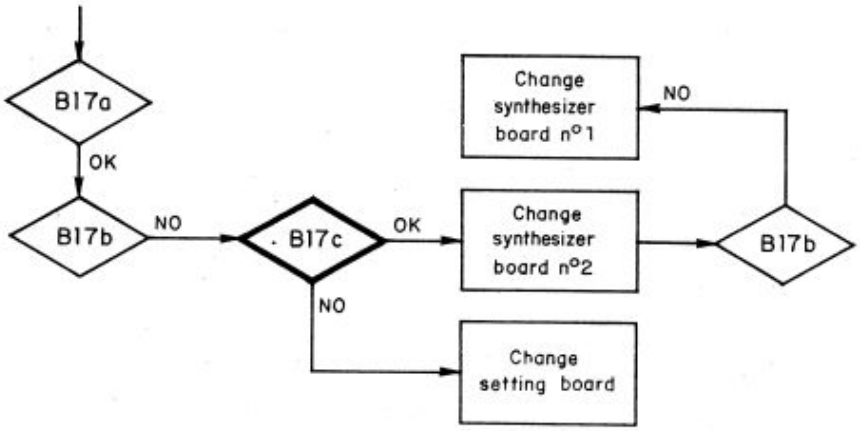

2 – PROCEDURE

2-1 - Prepare set up shown on the right page and see fig. 3-1.

2-2 - Frequencymeter reading : see table n° 1.

2-3 - Voltmeter reading : see table n° 2.

Table n° 1

Man-Pack setting	Frequencymeter reading
0 2 0 0 0 . 0	4
0 3 0 0 0 . 0	5
0 4 0 0 0 . 0	6
1 0 0 0 0 . 0	12
1 1 0 0 0 . 0	13
1 5 0 0 0 . 0	17
1 6 0 0 0 . 0	18
2 7 0 0 0 . 0	29
2 8 0 0 0 . 0	30
2 9 0 0 0 . 0	31

Table n° 2

Man-Pack setting	Voltmeter reading
0 2 0 0 0 . 0	0
0 2 1 0 0 . 0	0
0 2 2 0 0 . 0	+ 1.5 V to + 2.5 V
0 2 3 0 0 . 0	+ 1.5 V to + 2.5 V
0 2 4 0 0 . 0	+ 4 V to + 5 V
0 2 5 0 0 . 0	+ 4 V to + 5 V
0 2 6 0 0 . 0	+ 6 V to + 7.5 V
0 2 7 0 0 . 0	+ 6 V to + 7.5 V
0 2 8 0 0 . 0	+ 9 V to + 10.5 V
0 2 9 0 0 . 0	+ 9 V to + 19.5 V

TEST B17c

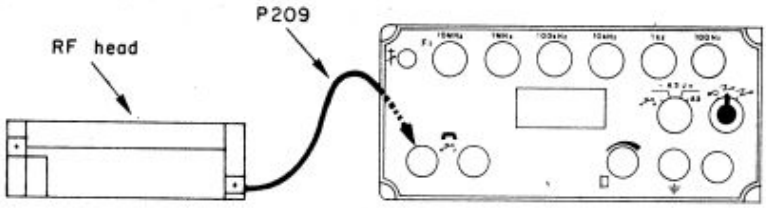
RF head
P209

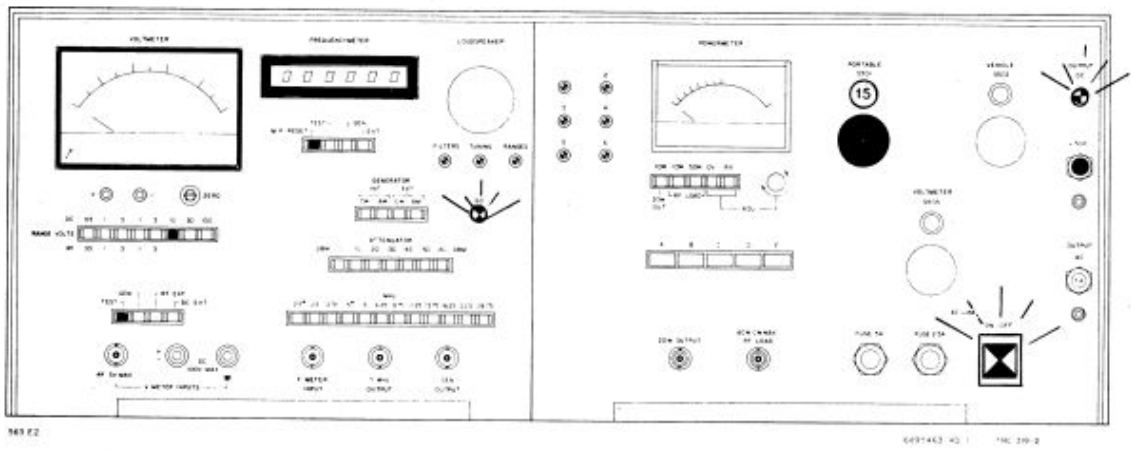
VOLTMETER
FREQUENCYMETER
LOUDSPEAKER
POWERMETER
15

TEST B18 - 20 W AMPLIFIER

1 – TROUBLESHOOTING FLOWCHART

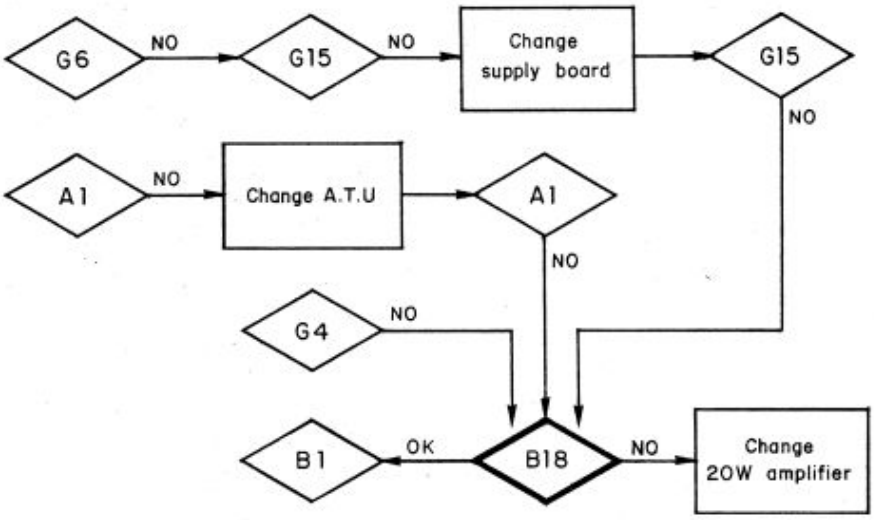

2 – PROCEDURE

2-1 - Prepare set up shown on the right page and see fig. 3-1.

2-2 - Voltmeter and power-meter reading : see table hereunder.

	S501	S503	Generator attenuator	Power-meter reading	Voltmeter reading
	22	2	– 60 dB	0	+ 0.02 to + 0.06 V
	22	2	0	100 ± 1 dB	+ 0.2 to + 0.4 V = X volts
Push "D"				70 ± 1 dB	≤ X volts
	22	18	0	100 ± 1 dB	+ 0.8 to + 1.2 V = Y volts
Push "D"				70 ± 1 dB	Y – 0.5 dB mini.
	22	19	0	100 ± 1 dB	0.1 V maxi.
Push "D"				70 ± 1 dB	Same reading + 3 dB mini.
	21	20	– 60 dB	0	+ 2 to + 3.5 V

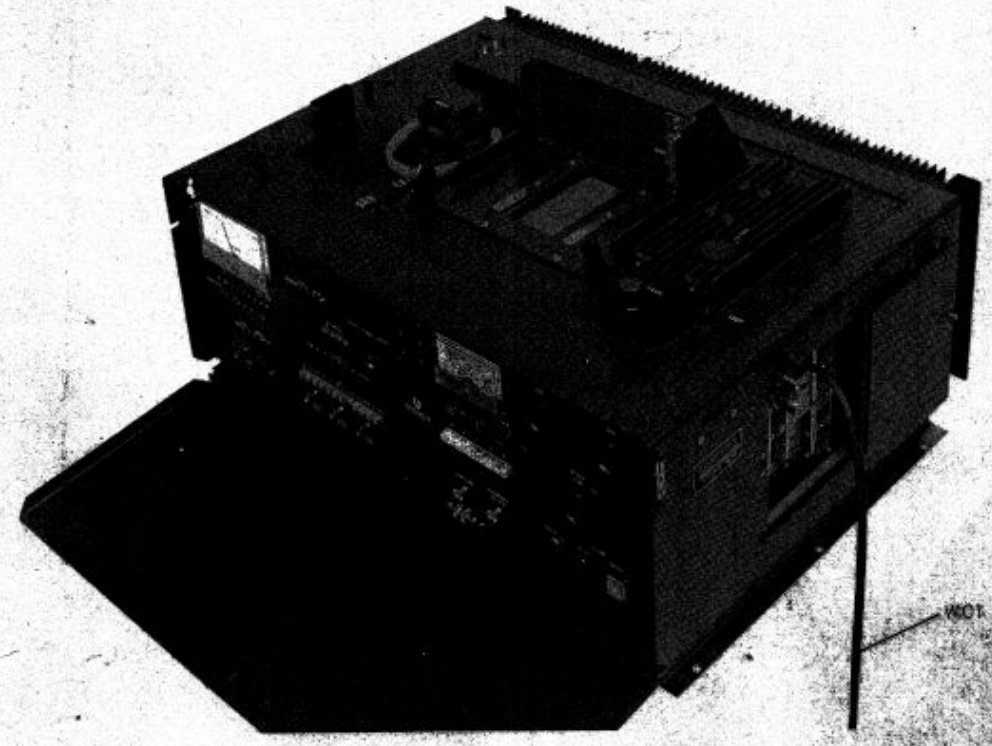
WOT

Fig. 3-3

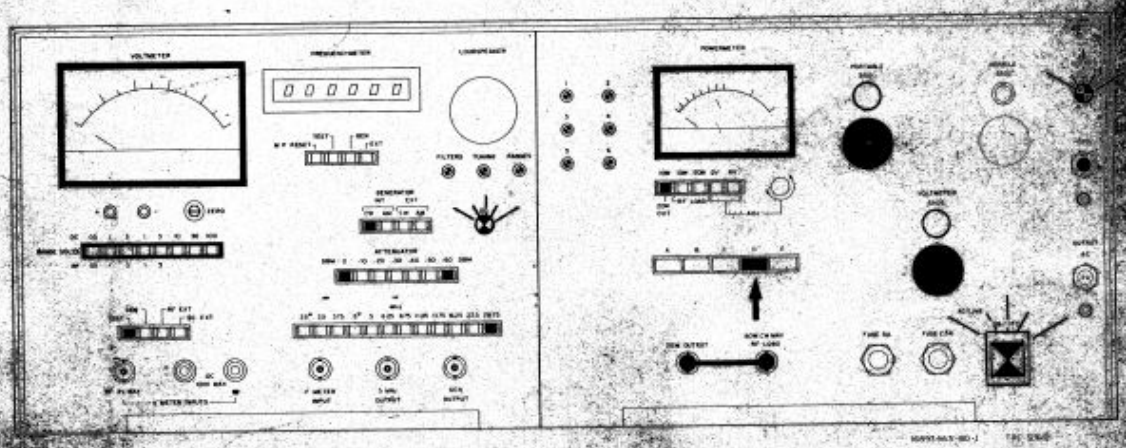
VOLTMETER
FREQUENCYMETER
LOUDSPEAKER
POWERMETER
FILTERS
TUNING
POWER
GENERATOR
ATTENUATOR
VOLTMETER
VOLUME