INSTRUCTION MANUAL

FOR

RC.8 TRANSMITTER RECEIVER INSTALLATION

Type RC.8 — Transmitter-Receiver Unit.

" RC.72B — Power Supply Unit.

" RC.25 — Aerial Filter Unit.

" RC.78A — Remote Control Unit.

RADIO CORPORATION PTY. LTD.
(A DIVISION OF ELECTRONIC INDUSTRIES LTD.)
126-130 GRANT STREET, S.C. 4
MELBOURNE, AUSTRALIA

ORDERING OF REPLACEMENT PARTS

When ordering spare or replacement parts, the Radio Corporation Part Number, as specified on the parts list, should be quoted, together with the serial number of the unit concerned.

If the part required is not quoted on the parts list, give a description of the part required and state what parts of the equipment it is associated with.

INSTRUCTION MANUAL

FOR

RC.8 TRANSMITTER-RECEIVER INSTALLATION

Type RC.8	—	Transmitter-Receiver Unit.
,, RC.72B	—	Power Supply Unit.
,, RC.25	—	Aerial Filter Unit.
,, RC.78A	—	Remote Control Unit.

RADIO CORPORATION PTY. LTD.
(A DIVISION OF ELECTRONIC INDUSTRIES LTD.)
126 Grant Street,
SOUTH MELBOURNE,
Australia.

TABLE OF CONTENTS

PART 1 — INTRODUCTION.

		Page
1.1	Function.	1
1.2	Construction.	1
1.3	Composition.	1
1A.	INSTALLATION OF THE EQUIPMENT.	2
1A.1	Introduction.	2
1A.2	General.	3
1A.3	Location of Units and Installation.	3
1A.4	Electrical Connections.	3

PART 2 — TRANSMITTER-RECEIVER UNIT TYPE RC.8.

2.1	Introduction.	5
2.2	Construction.	5
2.3	Power Consumption.	5
2.4	Circuit Arrangement.	5
2.5	Special Applications.	5
2A.	RECEIVER SECTION.	5
2A.1	General.	5
2A.2	Performance.	6
2A.3	Description of Controls.	6
2B.	TRANSMITTER SECTION.	6
2B.1	General.	6
2B.2	Performance.	6
2B.3	Description of Controls.	7
2C.	OPERATING INSTRUCTIONS.	8
2C.1	General.	8
2C.2	Preliminary.	9
2D.1	Receiver Tuning.	9
2D.2	Netting.	9
2E.1	Transmitter Tuning in conjunction with Aerial Filter Unit.	10
2F.1	Transmitter Tuning without Aerial Filter Unit.	
2F.2	2 - 5 Mc/s. Operation.	11
2F.3	5 - 10 Mc/s. Operation.	11
2G	CIRCUIT DESCRIPTION.	10
2G.1	Receiver Section.	12
2G.2	Radio Frequency Circuits.	12
2G.3	Converter Circuit.	12

2G.4 Intermediate Frequency Amplifier and Detector. 12
2G.5 Audio Frequency Stage. 12
2G.6 Volume Control. 13
2G.7 Transmitter Section. 13
2G.8 Modulator. 13
2G.9 Detailed Description of Switch Functions. 13
2G.10 Detailed Description of Relay Functions. 14

2H. ROUTINE INSPECTION AND SERVICE INSTRUCTIONS. 15
2H.1 Introduction. 15
2H.2 Inspection. 15
2H.3 Fault Finding. 16
2H.4 Receiver Alignment. 17
2H.5 Intermediate Frequency Alignment. 17
2H.6 B.F.O. Alignment. 17
2H.7 R.F. Section Adjustments. 17
2H.8 Voltage Analyses. 18

PART 3 — POWER SUPPLY UNIT TYPE RC.72B. 21

3.1 Introduction. 21
3.2 Construction. 21
3.3 Circuit Description. 21
3.4 Routine Inspection. 21

PART 4 — AERIAL FILTER UNIT TYPE RC.25. 23

4.1 Introduction. 23
4.2 Construction 23
4.3 Tuning Instructions. 23
4.4 Circuit Description. 23
4.5 Routine Inspection. 23

PART 5 — REMOTE CONTROL UNIT TYPE RC.78A. 25

5.1 Introduction 25
5.2 Operating Instructions. 25
5.3 Routine Inspection. 25

PART 6 — PARTS LISTS.

Transmitter-Receiver Unit Type RC.8. 28-33
Power Supply Unit Type RC.72B. 34-35
Aerial Filter Unit Type RC.25. 36
Remote Control Unit Type RC.78A. 37
List of Manufacturers. 38

PART 7 — ILLUSTRATIONS.

Figure 1 — General layout, showing designation of connecting cables and interconnections between units of the equipment.

Figure 2 — Schematic Diagram Transmitter-Receiver, Type RC.8.

Figure 3 — Schematic Diagram Power Supply Unit, Type RC.72B.

Figure 4 — Schematic Diagram Aerial Filter Unit, Type RC.25.

Figure 5 — Schematic Diagram Remote Control Unit, Type RC.78A.

Figure 6 — Front view of RC.8 Equipment.

Figure 7 — View of Front Panel on Transmitter-Receiver, Type RC.8.

Figure 8 — Top Front View of Chassis Transmitter-Receiver, Type RC.8.

Figure 9 — Top Back View of Chassis, Transmitter-Receiver, Type RC.8.

Figure 10 — View of Bottom Back on Transmitter-Receiver, Type RC.8.

Figure 11 — View of Bottom Front on Transmitter-Receiver, Type RC.8.

Figure 12 — Top End View of Transmitter-Receiver, Type RC.8.

Figure 13 — Bottom View of Transmitter-Receiver, Type RC.8.

Figure 14 — View of Front Panel on Aerial Filter Unit, Type RC.25.

Figure 15 — Top View of Aerial Filter Unit, Type RC.25.

Figure 16 — Back View of Aerial Filter Unit, Type RC.25.

Figure 17 — Front View of Remote Control Unit, Type RC.78A.

Figure 18 — View of Wiring on Remote Control Unit, Type RC.78A.

Figure 19 — Front View of Power Supply Unit, Type RC.72B.

Figure 20 — Bottom View of Power Supply Unit, Type RC.72B.

Figure 21 — Top View of Power Supply Unit, Type RC.72B.

Figure 22 — Side View of Power Supply Unit, Type RC.72B.

Figure 23 — Typical Master Oscillator Calibration Curve.

Figure 24 — Typical Power Amplifier Calibration Curve.

PART I.

INTRODUCTION

INSTRUCTION MANUAL FOR RC.8 TRANSMITTER-RECEIVER INSTALLATION

PART 1 — INTRODUCTION

1.1 FUNCTION.

The type RC.8 Transmitter-Receiver Equipment is designed especially for installation in vessels of all types, including open boats and landing barges, trucks, or can be used as a Ground Station where it is desired to provide means of communication by radio telephony, continuous wave, or modulated continuous wave telegraphy.

1.2 CONSTRUCTION.

The complete equipment has been specially designed for dependable operation under adverse service conditions. All component parts have been treated to withstand any degree of vibration, humidity, or temperature met with in constant use in tropical climates. The metal from which the equipment is fabricated is especially treated to withstand the corrosive action of a salt water atmosphere.

1.3 COMPOSITION.

(a) MAJOR COMPONENTS. Each complete equipment consists of the following major components:—

Item.	Qty.	Description.	Size, Inches.	Weight, Lbs.
1	1	MODEL RC.8 TRANSMITTER-RECEIVER UNIT, complete in totally enclosed and shock mounted metal cabinet and including 4 crystals and one working set (9) valves and Instruction Manual.	24 x 12 x 12	60
2	1	Type RC.72B 12V. DC POWER SUPPLY UNIT, complete in metal cabinet and including 1 spare vibrator and 1 set (4) fuses in addition to a working set.	14 x 13 x 11	48
3	1	Type RC.25 AERIAL FILTER UNIT.	10 x 9 x 8	11
4	1	Type RC.78A REMOTE CONTROL UNIT, which includes headphones, microphone, and key.	14 x 10 x 6	18
5	1	Type PM284 SPEAKER AND BOX ASSEMBLY, complete with lead.	9 x 9 x 6	7
6	1	Type PM821 KEY, complete with plug and cable.		
7	1	Type PM822 MICROPHONE, complete with plug and cable.		
8	1	Type PM239 HEADPHONES, 500 OHM, complete with plug-cord.		
9	1	Set of CONNECTING CABLES, (see page 2)		

SET OF CONNECTING CABLES — Comprising one each of the following:—

Type PM142 Power Supply-Transmitter Receiver. (6 way cable complete with plugs.) Length, 4 ft.

Type PM144 Junction Box-Transmitter Receiver (6 way shielded cable and plug) with Junction Box. Length 4 ft.

Type PM143 Transmitter-Receiver-Aerial Filter. Length 15 inches.

Type PM145 Transmitter Receiver-Aerial Filter Unit input (Co-axial cable complete with couplers, 73 ohm cable). Length 9 inches.

(b) PACKING.

The complete equipment is packed for shipment in two wooden cases:—

Case 1 — Contains Items 2 and 4. 84 lbs. 26 x 21 x 12 in.

Case 2 — Contains the remainder of the equipment. 112 lbs. 22 x 15 x 12 in.

Items 1 to 5 are packed in individual cartons, weights and sizes given include carton and packing. Items 6 to 9 are packed in one carton.

(c) ADDITIONAL EQUIPMENT.

The following additional equipment is required but is not supplied unless specially specified:—

i. Aerial and earth system.

ii. 12V. Power Source (145 A.H. accumulator and charger).

iii. Remote control cable (6 conductor and earthed covering).

iv. Battery leads.

(d) VALVES. 1.

One complete working set of valves is furnished with each shipment. The types and quantities are as follows:—

Quantity.	Type.
2	807
1	6V6G
1	1L5G
2	1M5G
2	1C7G
1	1K7G

(e) CRYSTALS.

One complete set of four crystals ground to any specified frequencies between 2 and 5 Mc/s. and fitted in type RC.41J holders are supplied with each equipment.

NOTE.—When ordering crystals for frequencies between 5-10 Mc/s. crystals are supplied at half the fundamental frequency, frequency doubling being achieved in the P.A. tuned circuit when necessary. 1

1A. INSTALLATION OF THE EQUIPMENT.

1A.1 INTRODUCTION.

Prior to installation, each section of the equipment should be thoroughly inspected for any damage incurred during shipment. The mechanical motion of each switch and control should be checked for unrestricted movement over its indicated range.

All valves should be checked for proper seating and tightness of grid clips and retaining clips. Check frequency markings on crystal holders against frequency allocations and see that crystal holders are tight in sockets.

Before connecting up the various units of the equipment, set the "Operation" switch in the Transmitter-Receiver Unit to the "Off" position and the "On-Off" switch in the Remote Control Unit to "Off" position.

1A.2 GENERAL.

As the equipment is of unit construction, considerable latitude in the physical lay-out of the units can be allowed to meet individual requirements as regards the complete installation. The following general rules should, however, be observed:—

i. Short heavy leads from the primary power source to the Power Supply Unit are necessary, as any voltage drop in these leads will materially reduce the power output of the Transmitter. (7/052 Cable or equivalent is recommended as the minimum conductor size, and the leads should not be over 8 ft. long.)

ii. The Aerial Filter Unit should be located so that a short direct lead to the lead-in insulator is used. This lead should be removed as far as possible from any metallic structure.

1A.3 LOCATION OF UNITS AND INSTALLATION.

(a) TRANSMITTER-RECEIVER TYPE RC.8.

The Transmitter-Receiver Unit should be mounted on the operating table in such a position as to allow easy access to the back of the unit, permitting insertion of cable connectors from other units of the equipment.

The following procedure for mounting should be adopted:—

i. Remove chassis from cabinet.

ii. Remove bottom plate.

iii. Drill 4-9/32 in. diameter holes through the operating table, using bottom plate as drilling template, and bolt down cabinet and bottom plate to the operating table with $\frac{1}{4}$ in. diameter bolts through the table.

(b) REMOTE CONTROL UNIT TYPE RC.78A.

The Remote Control Unit may be located in any convenient position up to 100 yards from the remainder of the equipment. The unit may be mounted on any flat vertical surface by means of $\frac{1}{4}$ in. diameter bolts through the four 9/32 in. diameter holes in the back of the unit.

(c) AERIAL FILTER UNIT TYPE RC.25.

Provision is made for mounting this unit on the top of the cabinet of the Transmitter-Receiver Unit, the cables supplied being the correct length for same. The Unit, however, may be mounted in any convenient location up to 25 feet from the Transmitter-Receiver without appreciable loss of power.

(d) POWER SUPPLY UNIT TYPE RC.72A.

The Power Supply Unit should be mounted on a horizontal surface in such a position as to allow easy access to the top hinged cover plate for the purpose of replacing any faulty fuses or the vibrator unit should this be necessary. Attention should also be paid to the accessibility of battery and connecting cables.

(e) AERIAL EQUIPMENT.

The particular type of aerial used will depend on the location of the Transmitter-Receiver relative to superstructure and other surrounding objects, as it is important to keep the aerial as far as possible from any metallic structure.

For general use, either a single wire vertical or semi-vertical inverted L or inverted T type aerial with an overall length of between 30 and 70 feet will prove satisfactory.

1A.4 ELECTRICAL CONNECTIONS.

Figure 1 shows a general layout and the connections between separate sections of the equipment.

(a) BATTERY CONNECTIONS.

As the negative input lead from the accumulator to the Power Supply Unit is connected to the chassis, care should be taken that the positive battery terminal is not connected to earth when changing the battery.

(b) AERIAL AND EARTH CONNECTION.

Aerial and earth terminals are of the spring type and pull out to allow connections to be made.

Special terminal lugs which lock when in position are supplied with the equipment. The aerial and earth leads may be clamped to the lug by means of the bakelite sleeve obviating the necessity of a soldered connection.

The aerial connects to the terminal marked "Aerial" on the Aerial Filter Unit.

The terminal marked "Aerial" on the front panel of the Transmitter Receiver is used if the equipment is operated without the Aerial Filter Unit.

(c) AERIAL FILTER UNIT — TRANSMITTER - RECEIVER CONNECTIONS (connecting cables PA134 and PA145).

The connecting cables supplied for interconnecting these two units of the equipment are of the correct length for use with the Aerial Filter Unit mounted on the top of the Transmitter-Receiver case.

The co-axial cable (PA145) terminated with a co-axial connector is used to connect the aerial circuit of the Transmitter-Receiver to the Aerial Filter Unit, and plugs into the co-axial connectors on the front panel of the Transmitter-Receiver on the left of the "Aerial Coupling" Switch (D) and the left-hand side of the Aerial Filter Unit marked "Input."

The single core cable (PA134) connects to the Banana sockets at the back left-hand corner of the Transmitter-Receiver and the left-hand side of the Aerial Filter Unit marked "Relay."

Should it be necessary to mount the Aerial Filter Unit away from the Transmitter-Receiver, a 73 ohm co-axial cable and the equivalent of 18 gauge flexible cable respectively should be used for these two cables.

(d) TRANSMITTER - RECEIVER — POWER SUPPLY (Connecting Cable PA142).

It is not recommended to increase the length of the connecting cable supplied, as any increase in the resistance of th L.T. leads will cause sufficient drop i voltage to reduce the power output fro the transmitter. This cable, which terminated with 6 pin sockets, connec the 6 pin plugs on the front of the Powe Supply Unit and the back left-hand sid (next to the earth terminal and banan socket) of the Transmitter-Receiver.

(e) JUNCTION BOX — TRANSMITTE RECEIVER (Connecting Cabl PA144).

The cable terminated by a 6 pin socke is wired to the Junction Box, the 6 con ductors being connected to contacts 1- on the plug and Junction Box lugs re spectively. No. 7 connection on th Junction Box is the outer braid which connects to the earth terminal on the Transmitter-Receiver base plate, while the 6 pin plug connects to a corresponding socket situated above this terminal in the back of the cabinet.

(f) JUNCTION BOX — REMOTE CONTROL.

Shielded cable (6 conductor) is used to connect these two units of the equipment. The conductors 1-6 are connected to terminals 1-6 respectively on the Junction Box and Remote Control Unit. No. 7 terminal is connected to the earth (outer covering) of the cable.

(g) SPEAKER — REMOTE CONTROL.

The speaker assembly connects to the top two terminals on the Remote Control Unit junction strip. The black lead which is connected to the frame of the speaker is connected to the terminal marked "E," and the red lead to the terminal marked "S."

PART 2.

TRANSMITTER-RECEIVER UNIT TYPE RC.8

TRANSMITTER-RECEIVER UNIT TYPE RC.8

PART 2.

2.1 INTRODUCTION.

The RC.8 Transmitter-Receiver provides a means of communication at any frequency between 2 and 10 Mc/s., by means of:—

(a) Continuous wave telegraphy.
(b) Modulated continuous wave telegraphy.
(c) Radio telephony.

2.2 CONSTRUCTION.

The chassis of the unit is housed in a shock mounted, dust-proof metal cabinet which has been specially treated to withstand salt spray and corrosion before the application of the baked enamel finish.
The design of the unit is such that economical battery consumption has been made possible by the use of low consumption valves in the receiver section. Provision is made to operate the receiver section with the transmitter section valve filaments and dial lights turned off with a still further reduction in battery consumption.

The Transmitter-Receiver Unit is operated in conjunction with the type RC.72B Power Supply Unit and a 12-volt accumulator. (see Part 3.)

2.3 POWER CONSUMPTION.

The total current consumption from the 12-volt accumulator is as follows:—

Receiver ("Normal" position), 1.5 amps.
Receiver ("Standby" position), 3 amps.
Transmitter (fully loaded), R/T, 19 amps.

2.4 SPECIAL APPLICATIONS.

Provision is made for remote operation by means of the RC.78A Remote Control Unit (see Part 5) and the matching of special aerials to the transmitter output circuit with low harmonic radiation by means of the RC.25 Aerial Filter Unit (see Part 4).

2.5 CIRCUIT ARRANGEMENT.

The Receiver section of the equipment consists of a 6-valve superheterodyne using 2-volt low consumption valves, details of which are given in Section 2A.
The Transmitter section consists of the choice of either a pentode crystal or electron coupled oscillator driving a beam power pentode output valve which is modulated by a similar valve when operated on Telephony or Modulated C.W. Telegraphy, details of which are given in Section 2B.

RECEIVER SECTION

2A.1 GENERAL.

(a) FREQUENCY RANGE.

The receiver is capable of reception on any frequency within the range of 2-10 Mc/s. in two bands. Band 1 (2-4.4 Mc/s.) and Band 2 (4.4-10 Mc/s.), each of these bands having overlap at both ends.

(b) TUNING CONTROLS.

The number of tuning controls have been kept to a minimum, and are as follows:—

i. "TUNING" control to cover frequency range in two bands.
ii. "VOLUME" control.
iii. "Beat Frequency Oscillator" control to which is combined the beat oscillator on-off switch.
iv. "FREQUENCY" change switch.
v. "SPEAKER-ON OFF" switch.
vi. "NETting" switch.

(c) VALVE COMPLEMENT.

i.	Radio frequency amplifier	1M5G
ii.	Oscillator mixer	1C7G
iii.	1st IF amplifier	1M5G
iv.	2nd IF amplifier and 2nd detector	1K7G
v.	1st Audio and B.F.O.	1C7G
vi.	Output stage	1L5G

2A.2 PERFORMANCE.

(a) SENSITIVITY.

The absolute sensitivity is such that an input voltage of less than 5 microvolts when modulated to a depth of 30% at 400 cycles per second will produce an output of 6 milliwatts of audio power into an inductive load of 500 ohms with a signal to noise ratio of better than 10 to 1 in watts.

(b) SELECTIVITY.

The selectivity as measured by varying the input voltage to the intermediate frequency amplifier to produce a constant output with known change of the input frequency is as follows:—

6	kilocycles	off	resonance	=	6	db. down.
12	"	"	"	= 12	"	"
22	"	"	"	= 40	"	"
34	"	"	"	= 60	"	"

(c) FIDELITY.

The overall fidelity characteristics measuring from the aerial to output are within ± 7 db. between 200 and 3000 cycles.

(d) POWER OUTPUT.

The power output valve of the receiver is capable of an output of 750 milliwatts.

2A.3 DESCRIPTION OF CONTROLS.

(a) "RECEIVER TUNING" CONTROL.

The dial disc is calibrated directly in frequency, and is read against the corresponding indicator for the band being used, i.e., 2-4.4 Mc/s. on left-hand side, 4.4-10 Mc/s. on right-hand side, each dial division being equal to 100 Kc/s.

The drive to the tuning condenser through a 40/1 ratio planetary vernie the front disc of the dial drives the tuni condenser through this movement, a the back provides direct drive for qui setting.

(b) "VOLUME" Control.

This control is used to vary the sensitivi of the receiver by varying the voltage o the screen grids of the radio frequen and 1st Intermediate frequency valv with corresponding variation in the ga of these stages.

(c) "B.F.O." CONTROL.

This control is used to vary the frequenc of the beat frequency oscillator for C.W reception, and is coupled to a small var able condenser incorporating a shortin contact which short circuits the tune circuits in the "Off" position.

(d) "FREQUENCY" SWITCH.

This control is used to change over fro one set of receiver coils to the other, an is mechanically coupled to the "Fre quency" change switch in the R.F. sectio of the receiver.

(e) "SPEAKER ON-OFF" SWITCH.

This switch connects the speaker to th receiver output, and is effective only o local operation when receiving.

(f) "NETting" SWITCH.

This switch is of the spring return type and when held down disconnects the H.T. supply to the Power amplifier, and connects the H.T. voltage to the receiver section, and is used to net the receiver to the transmitter and vice versa.

TRANSMITTER SECTION

2B.1 GENERAL.

(a) FREQUENCY RANGE.

The transmitter oscillator section covers from 2-5 Mc/s. Operation from 5-10 Mc/s. is obtained by frequency multiplication in the power amplifier.

(b) TUNING CONTROLS.

i. "SEND-RECEIVE" switch.
ii. "EMISSION" switch.
iii. "OPERATION" switch.
iv. "FREQUENCY" selector (A).
v. "OSCillator "TUNING" control (B).
vi. "P.A. TUNING" control (E).
vii. "P.A. LOADING" inductor (C).
viii. Aerial Coupling switch (D).
ix. "STAND-BY" switch.

(c) VALVE COMPLEMENT.

i.	H.F. Oscillator	6V6G
ii.	Power Amplifier	807
iii.	Modulator	807
iv.	A.F. Oscillator	1L5G

2B.2 PERFORMANCE.

(a) FREQUENCY CONTROL.

Either crystal control or master oscillator control is provided. In the case of crystal control, facilities are available for four spot crystal frequencies in the range of 2-5 Mc/s. Continuous frequency coverage is obtainable when using master oscillator operation over the same range.

(b) FREQUENCY STABILITY.

The frequency stability of the emitted carrier when using master oscillator control is within 0.2% with changes of ambient temperature between 20° C. and 60° C.

(c) POWER OUTPUT.

The power output of the transmitter is between 10 and 20 watts depending on frequency.

(d) OUTPUT CIRCUIT.

The output circuit is designed for operation into all types of aerials which are normally used in equipment of this type. Where special aerials are to be used and a low percentage of harmonic output required, the Aerial Filter Unit RC.25 is used.

(e) KEYING.

Provision is made for the transmission of modulated continuous wave or continuous wave telegraphy. The system is capable of clean cut and chirp free keying of speeds up to 30 words per minute, and will not permit of radiation from the transmitter when the key is open. Key clicks are not emitted during telegraphy transmission.

(f) MODULATION R/T.

The transmitter is capable of at least 90% modulation with negligible carrier shift at any frequency within its operating range.

(g) MODULATION M.C.W.

Approximately 800 cycles at 90-100% modulation.

(h) SIDE TONE.

Side tone is provided on the transmitter for M.C.W.-C.W. and R/T. transmission when headphones are used. Side tone is not provided when using the loud speaker.

(i) PRESS-TO-TALK OPERATION.

"Press-to-talk" operation for R/T. is provided in either local or remote operation using a standard single button carbon microphone.

2B.3 DESCRIPTION OF CONTROLS.

(a) "SEND-RECEIVE" SWITCH.

The "Send-Receive" switch energises all necessary relays to change from transmitting to receiving, the type of transmission being controlled by the "Emission" switch. "Press-to-talk" operation is provided for with the switch in the "Receive" position irrespective of the position of the "Emission" switch.

(b) "EMISSION" SWITCH.

The "Emission" switch operates only in the local position, and provides for M.C.W., C.W., or R/T. transmission when the "Send-Receive" switch is in the "Send" position. The setting of this switch has no effect on the "Press-to-talk" operation of the equipment, which is controlled by the "Pressel" switch on the microphone with the "Send-Receive" switch in the "Receive" position.

(c) "OPERATION" SWITCH.

This switch is used to make all necessary circuit alterations to perform the following functions:—

i. Use of type RC.78A Remote Control Unit.
ii. Turn the complete equipment "Off."
iii. Turn the equipment "On" for local operation.

In "Remote" position, remote operation is provided for. The "Emission" switch, "Send-Receive" switch, "Speaker" switch, and "Press-to-talk" switch on the microphone are inoperative, and the settings of same have no effect on the operation of the equipment. The phone jack is permanently connected to allow monitoring of the equipment both sending and receiving.

In the "Off" position, all primary power circuits are broken in the power supply unit, making the equipment inoperable.

In "Local" position, all controls on the Transmitter-Receiver Unit are in the operating position, the remote control

being entirely isolated and having no bearing on the operation of the equipment.

(d) "FREQUENCY" SWITCH (A).

This is a 5-position switch, and selects any one of 4 crystals within the frequency range 2-5 Mc/s. (X1, X2, X3, or X4), and makes the necessary circuit alterations when changing from Master Oscillator to crystal controlled operation.

(e) "OSCILLATOR TUNING" CONTROL (B).

This control, which has a 40/1 planetary vernier drive from the black bakelite disc in the centre, is coupled to the oscillator tuning condenser, and is used to tune the plate circuit to resonance in the case of crystal control, and to vary the frequency of the electron coupled oscillator when using master oscillator control.

(f) "P.A. TUNING" CONTROL (E).

This control is used to tune the output circuit of the P.A. to resonance with the aerial in conjunction with "P.A. Loading" inductance.

(g) "P.A. LOADING" INDUCTOR (C).

This control is used to vary the inductance coupling the plate circuit of the Power Amplifier to the aerial in conjunction with the "P.A. Tuning" Control tune the aerial to resonance with Power Amplifier.

(h) AERIAL COUPLING SWITCH (D).

Position 1 — Connects the aerial circuit to the coaxial coupler for use with the RC.25 Aerial Filter Unit.

Position 2 — Connects the aerial circuit to the aerial terminal.

Position 3 — As above (2) with .0001 mfd. capacity to earth.

Position 4 — As above (2) with .0003 mfd. capacity to earth.

(i) "STANDBY NORMAL" SWITCH.

In "Normal" position, the equipment will operate as a receiver only. All relays, transmitter section valve heaters and pilot lights being disconnected from the L.T. supply, a considerable saving is made on the power consumption of the equipment. In "Standby" position, equipment is ready for operation as a transmitter.

NOTE.—Allow 30 seconds for the transmitter section valve filaments to reach operating temperature before changing from "Receive" to "Send."

OPERATING INSTRUCTIONS

2C.1 PRELIMINARY.

With the equipment connected as outlined in Part 1A, it is only necessary to plug the headphones, microphone, and key into their respective jacks to commission the equipment.

CAUTION.

Do not turn on the equipment with the "Send-Receive" switch in the "Send" position.

Allow approximately 30 seconds for the transmitter section valve heaters to reach operating temperature before the H.T. voltage is applied to the transmitter section.

Do not change from Master Oscillator to Crystal Oscillator operation with the equipment operating as a transmitter, i.e., set the "Send-Receive" switch to "Receive" before changing.

2C.2 GENERAL.

The "Standby-Normal" switch should be left in the "Standby" position if the equipment is being used at frequent intervals as a transmitter.

When the equipment is used for the major portion of the operating time as a receiver, the switch may be set to the "Normal" position with a subsequent reduction in the current drain from the batteries, and the switch changed to the "Standby" position approximately 30 seconds before it is required to transmit.

To turn the equipment "On," set the "Operation" switch to "Local."

To tune the transmitter section, set the "Emission" switch to "R/T." This obviates the necessity of holding the key down during this operation. After the tuning operations are completed, turn the switch to correspond with the type of emission required.

When using "Press-to-talk" operation, the setting of the "Emission" switch has no effect on the operation of the equipment, all switching being controlled by relays controlled by the pressel switch on the microphone.

The aerial current should rise when the power amplifier valve is modulated, i.e., when speaking into the microphone in the case of R/T. transmission, and similarly the M.C.W. aerial current should be higher than the C.W. aerial current. If this is not the case, decrease the loading on the power amplifier valve as indicated by the Amp Plate Current Meter reading. This is accomplished by readjustment of the Aerial Coupling control on the Aerial Filter Unit, and slight readjustment of the other tuning controls if necessary.

If the Aerial Filter Unit is not being used, readjustment of the "P.A. Loading" and "P.A. Tuning" controls will perform the same function.

2D.1 RECEIVER TUNING.

i. Set "Send-Receive" switch to "Receive."

ii. Turn "Operation" switch to "Local" position. This supplies H.T. and filament voltages to the receiver section.

(NOTE.—With "Standby Normal" switch in "Standby" position, transmitter valve heaters, dial lights, and relay circuits are also connected.)

iii. Set "Frequency" switch to required band.

iv. Turn "Volume" control in a clockwise direction. This increases the sensitivity of the RF section of the receiver.

v. Turn the "B.F.O." control to the fully clockwise position.

vi. Set the "Receiver Tuning" control at the correct frequency. The required signal may then be tuned by turning the outer dial disc.

vii. For C.W. reception, the "B.F.O." control may then be adjusted for the best readable note. For M.C.W. and R/T. reception, the "B.F.O." control should be set to the "Off" position.

2D.2 NETTING.

To net the receiver to the transmitter —

i. With the transmitter tuned to the required frequency, set the "B.F.O." control to the fully clockwise position.

ii. Set "Send-Receive" switch to "Send."

iii. Set "Emission" switch to "R/T."

iv. Hold down the "Netting" switch.

v. Tune the receiver to zero beat with the signal from the transmitter oscillator section, the volume being decreased to prevent overloading of the R.F. section of the receiver.

To net the transmitter to the receiver, a similar procedure is adopted, in this case the "Oscillator Tuning Control (B) is adjusted to zero beat with the receiver.

NOTE.—Headphones must be used for these operations.

2E.1 TRANSMITTER TUNING IN CONJUNCTION WITH AERIAL FILTER UNIT RC.25.

When using the Aerial Filter Unit the tuning of the Transmitter-Receiver section is simplified by referring to the calibration curves, Figures 23 and 24 respectively, and the following procedure adopted:—

i. Set "Aerial Coupling" control in Aerial Filter Unit to 0-0.

ii. Set "Aerial Coupling" Control (D) to position 1.

iii. Set "Standby Normal" switch to "Standby" position.

iv. Set "Emission" switch to "R/T."

v. Set "Operation" switch to "Local."

(a) MASTER OSCILLATOR OPERATION.

i. Set "Frequency" control (A) to "M/O" position.

ii. Set controls (B), (C), and (E) to readings given in table for the required frequency of transmission.

iii. Set "Send-Receive" switch to "Send."

iv. Adjust "P.A. Loading" control (C) for maximum dip (minimum reading) of Amp Plate Current Meter.

v. Tune aerial circuit by means of the Aerial Coupling Unit (see Part 4).

vi. Check frequency by means of a Heterodyne Wave Meter or net against the receiver.

vii. Readjust "Oscillator Tuning" Control (B) for accurate frequency setting.

(b) CRYSTAL OSCILLATOR OPERATION.

i. Set Control (A) to X1, X2, X3, or X4, depending on the crystal frequency required.

ii. Set Control (B) to reading give in Figure 13.

iii. Set Controls (C) to (E) to read ings given in Figure 24 respec tively for required frequency o transmission.

iv. Set "Send-Receive" switch t "Send."

v. Adjust Control (B) to a stabl condition of operation, which i slightly on the low dial readin side of the point of maximum di in the Amp Plate Current Mete reading.

vi. Adjust Control (C) for maximu dip.

vii. Tune the aerial circuit by mean of the Aerial Filter Unit, as out lined in Part 4.

TYPICAL ADJUSTMENTS USING AERIAL FILTER UNIT

(With 50 ft. vertical aerial — single wire).

CONTROL.		FREQUENCY MC/S.								
		2	3	4	5	6	7	8	9	10
RC.25										
Oscillator Tuning	(B)	177	93	45	8	93	68	45	24	8
P.A. Loading	(C)	14	6	5	8	10	7	8	8	7
Aerial Coupling	(D)	1	1	1	1	1	1	1	1	1
P.A. Tuning	(E)	180	180	140	100	50	55	20	0	0
RC.8										
Aerial Coupling		3·8	1·2	3·8	3·8	3·8	3·8	2·3	1·2	1·6
Aerial Capacity		6	6	4	4	2	2	4	4	4
Aerial Feed		1	1	1	1	1	1	1	1	1
Aerial Tuning		29	13	8	7	4·5	16	11	7·5	6
Aerial Current		·75	·7	·6	·45	·3	·1	·05	·1	·3

2F.1 TRANSMITTER TUNING (WITHOUT AERIAL FILTER UNIT).

When the equipment is used without the Aerial Filter Unit, the control settings indicated in Figure 24 have no bearing on the tuning of the equipment. When used without the Aerial Filter Unit, the aerial system becomes part of the circuit tuning the Power Amplifier plate, making the adjustment of the controls (C), (D), and (E) a function of both the aerial characteristics and the frequency of

transmission, with the result that the control settings will vary with each individual aerial system.

The following may be taken as a guide in setting the "Aerial Coupling" control (D).

Type of Aerial.	Setting of Control (D).
Rod aerial or any aerial under ¼ wave length at the operating frequency	2
Aerials between ¼ and ½ wave length at the operating frequency and 600 ohm lines	3-4
NOTE.—Position 1 is only used when using the Aerial Filter Unit.	

Tuning should then proceed as follows:—

i. Set "P.A. Loading" Control (C) to maximum (68).

ii. Set "P.A. Tuning" Control (E) to minimum (0).

iii. Set "Standby Normal" Switch to "Standby."

2F.2 2-5 MC. OPERATION.

(a) CRYSTAL OSCILLATOR CONTROL.

i. Set "Frequency" Control (A) to X1, X2, X3, or X4, depending on the crystal frequency required.

ii. Set "Send-Receive" switch to "Send."

iii. Adjust "Oscillator Tuning" Control (B) to a condition of stable operation, which is slightly on the low dial reading side of the point of maximum current indicated in the Amp Plate Current Meter.

iv. Turn "P.A. Tuning" Control (E) from 0-180, and note any dip in the Amp Plate Current Meter reading. Set control in position which gives maximum dip, i.e., minimum Amp Plate Current reading. This will be the dip at the highest dial reading on "P.A. Loading" control. If there is no dip or the Amp Plate Current decreases at 0, turn "P.A. Loading" Control (C) in an anti-clockwise direction until dip occurs.

v. To obtain maximum output, turn the "P.A. Loading" Control (C) in an anti-clockwise direction a few turns.

vi. Turn "P.A. Tuning" Control (E) in a clockwise direction until the Amp Plate Current again reads minimum.

vii. Repeat operations (v) and (vi) until the plate current minimum has increased to the normal operating current, i.e., between 75 and 80 MA.

(b) MASTER OSCILLATOR CONTROL.

i. Set "Frequency" Control (A) to "M/O" position.

ii. Set "Oscillator Tuning" Control (B) to reading indicated in Figure 23 for the required frequency of transmission.

iii. Set "Send-Receive" switch to "Send."

iv. Repeat (iv), (v), (vi), and (vii) as in previous section.

v. Check frequency by means of a Heterodyne Frequency Meter or net against the receiver section.

vi. Readjust "Oscillator Tuning" Control (B) for accurate frequency setting.

vii. Check tuning of output circuits.

2F.3 5-10 MC. OPERATION.

(a) POWER AMPLIFIER AND AERIAL LOADING.

The tuning procedure for operating on frequencies between 5 and 10 mc/s. (in this case oscillator frequency is doubled in the Power Amplifier) is the same as for fundamental operation with the exception of Paragraph 2F.2 (a) iv, and

the following procedure should be adopted:—

i. Adjust the "P.A. Loading" Control (C) and "P.A. Tuning" Control (E) as in Para. 2F.2 (a) iv.

ii. Turn "P.A. Loading" Control (C) in an anti-clockwise direction until a second dip occurs in the reading of the Amp Plate Current Meter. This dip will not be as great as the dip when resonant at fundamental frequency.

iii. Tune for maximum output as in Para. 2F.2 (a) v, vi, and vii.

NOTE.

It is possible to treble and quadruple the frequency of the oscillator in the Power Amplifier Circuits by tuning to the third and fourth "dip" respectively by further decreasing the "P.A. Loading" inductance. For this reason, it is important that the tuning be carefully carried out in order to safeguard against any "dip" being passed over unnoticed when tuning and that when tuning, always to start from the maximum inductance (68) on "P.A. Loading" inductance indicator and minimum capacity (0) on "P.A. Tuning" capacity dial.

CIRCUIT DESCRIPTION.

2G.1 RECEIVER SECTION.

The schematic diagram (Figure 2) and the electrical parts list should be referred to for complete connections and specification of individual components.

The circuit arrangement used in the receiver section of the Transmitter-Receiver unit is of the superheterodyne type, using a R.F. amplifier stage ahead of the converter circuit, which is followed by two intermediate frequency amplifier stages operating at 455 Kc. feeding a diode detector. Audio amplification then follows in a voltage amplifier and power amplifier. A beat frequency oscillator provides for the reception of continuous wave telegraphy. The filament circuit is arranged for 12 volt operation by using the valves in a series parallel arrangement.

2G.2 RADIO FREQUENCY CIRCUITS.

The aerial is fed through the relay RL4 via contacts 21 and 22 and the switch S2B to the aerial coil L1. (As the high frequency and low frequency band R.F. circuits are identical, the switch S2A-I is assumed to be set in a high frequency position as in the schematic diagram, Figure 2.)

The secondary of the coil L1 is fed through switch S2A to the grid of the R.F. amplifier valve V1, which is tuned by one section of the 3 gang condenser C8a. The output from this valve is fed to the converter valve V4 via the coupling condenser C18.

2G.3 CONVERTER CIRCUIT.

The input to the grid circuit of detector section of the converter valve V4 is tuned by the R.F. coil L8 in conjunction with the second section of the 3 gang condenser C8b. The oscillator section is tuned by the third section of this condenser C8c and the oscillator coil L12.

Mixing of the oscillator and signal frequencies takes place within the valve.

2G.4 INTERMEDIATE FREQUENCY AMPLIFIER AND DETECTOR.

The output from converter is fed through the first I.F. transformer T2 to the grid of the first intermediate frequency amplifying valve V6. The plate circuit of this valve feeds the second I.F. transformer T4, which is coupled to the grid of the diode pentode valve V7, the pentode section being the second I.F. amplifier. The transformer T5 in the plate circuit of this valve couples the signal to the diode plates, where detection takes place, the rectified signal appearing across the diode load resistor R36 at audio frequency.

2G.5 AUDIO FREQUENCY STAGE.

The audio voltage from the diode plates of V7 is fed through the coupling condenser C62 to the grid of the pentagrid valve V8. The signal section is used as an audio amplifier, and the oscillator section as a beat frequency oscillator operating at 455 Kc. The frequency of this oscillator may be varied 5,000 cycles by

means of the B.F.O. tuning condenser C68, which tunes the oscillator coil L16. The output from the signal section of this valve is fed through the filter network C75, R47, C76, via the coupling condenser C61 and relay RL3 (contacts 4 and 5) to grid of the pentode output valve V9, the output from this valve feeding the speaker, phones, or remote control lines as required.

2G.6 VOLUME CONTROL.

The volume control R13 is used to vary the voltage on the screen grids of the radio frequency amplifier valve V1, and intermediate frequency amplifier valve V6 with a corresponding variation to the sensitivity of the receiver. One section of the receiver frequency switch S2F is used to short circuit the dropping resistor R4, which limits the sensitivity on the low frequency band (2-4.4 Mc/s.) with a corresponding reduction in noise level.

2G.7 TRANSMITTER SECTION.

The transmitter section consists of a beam power valve V3 which is used in either a grid earth type crystal oscillator or electron coupled master oscillator circuit depending on the settings of the switch S3, which also selects any one of four crystals. The output from this valve is fed through the coupling condenser C12 to the grid of the power amplifier valve V2, which is also of the beam power type, and is operated under Class C conditions as a R.F. power amplifier. The output from the plate circuit of this valve feeds through the coupling condenser C20, aerial loading inductance L6, aerial tuning condenser C26, and then via the relay RL4, which in the transmit position closes contacts 22 and 23 and feeds the aerial through the aerial coupling switch S1.

2G.8 MODULATOR.

The output from the modulator valve V5 is coupled to the plate circuit of the power amplifier by the auto-transformer T1 and R.F. choke L9. The grid circuit of the modulator valve is fed from the microphone transformer and from the output of the A.F. oscillator valve V9 when using M.C.W. The receiver output valve V9 is used as an audio frequency oscillator (900 cycles) to supply the modulating signal for M.C.W. transmission and CW and MCW side tone.

2G.9 DETAILED DESCRIPTION OF SWITCH FUNCTIONS.

(a) SWITCH S1.

This switch is used to change from the co-axial coupler which feeds the Aerial Filter Unit to the aerial terminal, if the Aerial Filter Unit is not being used, and also varies the parallel capacity in the aerial circuit. The input to this switch is connected to contact 22 of the aerial change over relay RL4.

(b) SWITCH S2 (a-i).

This switch makes all the necessary circuit connections to change from high frequency (4.4 to 10 Mc/s.) to the low frequency (2 to 4.4 Mc/s.) sets of coils through the switch sections a, b, c, d, e, g, h, and i, while section f is used to lower the screen grid voltages on the R.F. and I.F. amplifier valves when operating on the 2-44 Mc/s. band.

(c) SWITCH S3.

This switch is used to change from crystal control to master oscillator controlled operation, and in addition selects any one of four transmitting crystals.

Section (a) is used to connect either one of the four crystals or the master oscillator grid condenser C1 to the grid of the oscillator valve V3.

Section (b) is used to connect the cathode of the oscillator V3 to the oscillator coil L4 for master oscillator operation or to the bias resistor R4 when using crystal control.

Section (c) connects the tuning condenser C27 to the grid end of the oscillator coil L4 when using master oscillator control or to the plate circuit of the oscillator valve V3 when using crystal control.

Section (d) connects the R.F. choke L13 which feeds the plate circuit of V3 when using master oscillator control and connects the oscillator tuning coil L11 in the case of crystal control.

Section (e) is used to short circuit the resistor R15, which lowers the voltage on screen grid of V3 when using crystal control.

(d) SWITCH S4.

Section (a) is used to connect the cathodes of oscillator and power amplifier valves V3 and V2 respectively to earth for R/T. operation from the local position in conjunction with S6a.

Section (b) is used to remove the modulating voltage from the grid of the modulator valve V5 and permit C.W. transmission from the local position.

(e) SWITCH S5.

In the normal position connects the high tension voltage to the plate circuit of the power amplifier V2. When held down (in the "Net" position) connects the high tension voltage through the dropping resistor R16 to the receiver section for netting purposes.

(f) SWITCH S6.

Section (a) connects the oscillator and P.A. cathodes to earth for R/T transmission from the local position in conjunction with S4a.

Section (b) in the local position connects the On-Off relay in the power supply to earth via contact 6 in the plug P2 turning the equipment "On." In the remote position contacts 6 on the plugs P1 and P2 respectively are connected together allowing the equipment to be turned on or off from remote position.

Section (c) in the local position, the microphone jack J2 is connected through condensers C4 and relay coil RL1/3 to the microphone transformer T3. In the remote position, contact 2 of plug P1 is connected to the microphone transformer T3 in a similar manner.

Section (d) connects the key jack J3 in circuit with the keying relay RL2 and in the remote position connects the key in the Remote Control Unit via contact 1 of the plug P1 to this relay.

Section (e) in the local position connects the send-receive relay RL3 to earth in conjunction with the "Send-Receive" switch S7. In the remote position a similar operation is performed via contact 3 of plug P1 and the "Send-Receive" switch in the Remote Control Unit.

Section (f) in the remote position connects the modulating signal voltage to the grid modulator valve V5 for M.C.W. transmission.

Section (g) in the remote position supplies voltage to the pilot lights in the Remote Control Unit via contact 5 of plug P1.

Section (h) in the remote position connects the output from the power amplifier valve V9 via transformer T6 to Remote Control Unit via contact 4 of plug P1.

Section (i) connects the speaker in circuit with the output transformer T6 for local operation in conjunction with relay RL3 when receiving.

(g) SWITCH S7

In the "Send" position and local operation energises the send-receive relay RL3.

(h) SWITCH S8.

This switch in the normal position disconnects the low tension supply from transmitting valve heaters, pilot lights, and relay return leads, making the equipment inoperable as a transmitter both from the local and remote position.

(i) SWITCH S9.

This switch, which is combined with B.F.O. tuning condenser C68, is used to short circuit the tuned circuit in the oscillator section of V8, and permit R/T. and M.C.W. reception.

(j) SWITCH S10.

In the "On" position connects the speaker to the output of the power amplifier valve V6 via a low impedence winding on the output transformer T6. In the "Off" position resistor R44 is used to balance the loading of the output transformer.

2G.10 DETAILED DESCRIPTION OF RELAY FUNCTIONS.

(a) RELAY RL1 — PRESS-TO-TALK.

This relay is energised when the microphone circuit is completed by means of "Press-to-Talk" switch on the microphone. Contacts 1 and 2 operate the send-receive relay RL3 changing the equipment from send to receive. Contacts 3 and 4 close the oscillator and P.A. cathode for R/T. transmission. Contacts 21, 22, and 23 change the connections from the receiver output valve to the modulator grid, and feed the microphone transformer output into the grid of the receiver output valve V9 supplying the side tone.

(b) RELAY RL2 — KEYING.

Contacts 1 and 2 close the feed back circuit of the oscillator valve V9, which supplies the modulating signal for M.C.W. transmission. Contacts 21 and 22 feed the modulated signal to the grid of the modulator valve V5. Contacts 24 and 23 close the cathode from P.A. and oscillator, thus keying the output from the transmitter.

(c) RELAY RL3 — SEND-RECEIVE.

Contacts 1 and 2 complete the earth return from the speaker winding when in the "Receive" position. Contacts 2 and 3 operate the high tension change over relay in the Power Supply Unit, changing from send to receive. Contacts 4 and 5 connect the output from the audio amplifying valve V8 to grid of the output valve V9 when receiving. When on transmit the contacts 4 and 6 feed the grid circuit of V9 to the relay RL1. Contacts 7 and 8 operate the aerial change over relay RL4 and the Aerial Filter Unit relay via the plug Y3. Contacts 21, 22, and 23 change over the H.T. feed to V9. Contacts 25 and 24 open circuit the H.T. supply to the receiver when transmitting. Contacts 26 and 27 open the oscillator cathode circuit when receiving.

(d) RELAY RL4.

Contacts 1 and 2 attenuate the output in the headphones from V9 when transmitting, thus limiting the volume of the side tone. Contacts 2 and 3 complete the earth return circuit of the aerial loading condensers C2 and C3, which are only used when transmitting. Contacts 21, 22, and 23 change over the aerial from the transmitter to the receiving section.

ROUTINE INSPECTION AND SERVICE INSTRUCTIONS.

2H.1 INTRODUCTION.

To remove the chassis from the cabinet, first remove the connecting plugs from their sockets and disconnect the aerial and earth leads. The knurled head screws holding the front panel in the cabinet are then removed, which will allow the chassis to be withdrawn from the cabinet.

CAUTION.—Do not remove any valves from their sockets with the equipment turned on, as serious damage will occur to other valve filaments, due to overloading brought about by the series parallel arrangement of the filament wiring.

2H.2 INSPECTION.

The equipment should be periodically removed from the cabinet and thoroughly examined in order that any apparent faults may be corrected before causing a breakdown in service.

The following inspections should be made and any defects corrected:—

1. Examine the mechanical operation of all controls and see that they operate smoothly over their indicated tuning range.
2. See that all valves are properly seated in their sockets and that the clips are tight on the respective tube cap terminals.
3. Examine the individual components for signs of overloading, loose screws, or bad electrical connections.
4. Examine all relay and switch contacts for any signs of dirt and, if necessary, clean with carbon tetrachloride. Do not use sand paper to clean the contacts of the multi circuit relays or switches.
5. Examine the connecting cables and their associated plugs and sockets for good electrical connections.
6. Examine the winding and roller of the variable inductance unit for any sign of dirt or foreign matter, and clean if necessary. A small brush of the type used for oil painting should be used if it is necessary to remove any foreign matter from the winding. The roller and winding should be cleaned with a piece of cloth moistened with carbon tetrachloride.

After inspection the equipment should be tested under operating conditions at several frequencies over the tuning range.

2H.3 FAULT FINDING.

Failure of the RC.8 equipment in service may be caused by some superficial fault which can frequently be corrected by operating personnel. A summary of possible faults is given below and suggestions for their correction.

Symptom.	Possible Fault	Correction.
Noise in receiver.	Faulty battery connections.	Clean and tighten.
	Loose connections in aerial, phone cords, or connecting cables.	Examine all connections and tighten.
	Valves loose in socket or grid clips loose.	Inspect and tighten.
	Interference from local sources.	Check for noise with no aerial connected.
	Defective valves.	Replace.
	Bad switch connection or dirt in tuning condenser.	Clean.
	Faulty vibrator.	Try spare vibrator.
Receiver dead.		
(a) No filament voltage.	Flat battery.	Charge or replace.
	Faulty connecting cable.	Repair or replace.
	Fuse blown.	Check fuses in Power Supply Unit Replace.
	Valve burnt out.	Replace.
(b) No H.T. voltage.	Faulty vibrator.	Try spare.
	Faulty connections in cable connectors.	Clean contacts.
(c) Voltages appear correct.	Aerial shorting to earth.	Inspect and repair.
	Faulty relay.	Clean contacts.
	Faulty valve.	Replace valves in turn.
	Incorrect setting of controls.	Check.
		Replace.
Transmitter dead.		
(a) No Amp. H.T. current when key closed.	Faulty P.A. valve.	Clean contacts and check lead connections.
	Key, or key connections faulty.	
	Fuse blown.	Check fuses in Power Supply Unit Replace.
	Faulty relay.	Clean contacts.
	Faulty motor generator.	Check leads and brush gear.
(b) Amp. H.T. fails to dip when transmitter tuned.	Crystal faulty.	Try M/O.
	Supply voltages low.	Check battery voltage.
	Faulty oscillator valve.	Replace.
	Incorrect tuning.	Refer Tuning Instructions.
	Faulty tuning inductor.	Clean winding and roller.
(c) Transmitter will not load.	Faulty aerial connection.	Check aerial connection and aerial change over relay.
	Aerial filter unit.	Check.
	Incorrect tuning.	Refer Tuning Instructions.
(d) Transmitter will not modulate.	Faulty modulator valve.	Replace.
	Faulty microphone.	Replace.
	Press-to-talk relay.	Check and clean contacts.
(e) No side tone.	Faulty valve (V9).	Replace.
	Faulty headphones or connections.	Try spare headphones.
(f) Transmitter will not key.	Set on R/T.	Check control settings.
	Faulty key.	Check key adjustment and leads.
	Relay.	Check contact adjustments.

2H.4 RECEIVER ALIGNMENT.

Should it become necessary to realign the receiver section the following equipment will be essential for this operation:—

(a) Signal Generator capable of being modulated 30% and covering the Band 1.9 - 11 Mc/s., also the intermediate amplifier frequency — 455 Kc..

(b) 400 ohm dummy aerial (a 400 ohm carbon resistor is suitable for this purpose).

(c) An output meter with an impedance of at least 500 ohms, either a 600 or 20,000 ohm meter being suitable.

2H.5 INTERMEDIATE FREQUENCY ALIGNMENT.

With the Transmitter-Receiver Unit removed from the cabinet and connected to the Power Supply Unit:—

(a) Connect the output meter to the phone jack.

(b) Turn the volume control to the maximum position (fully clockwise).

(c) Turn the "B.F.O." to the "Off" position (fully anti-clockwise).

(d) Connect the generator between the Grid (cap.) of the converted valve V4 and earth.

(e) Set the signal generator frequency to 455 Kc. and the modulation to 30% at 400 cycles.

(f) The adjusting screws on the intermediate frequency transformers are then adjusted for maximum output which will be the maximum reading on the output meter. Two adjusting screws are provided on each transformer, one at the top being accessible from the top of the chassis and the other at the bottom of the can being accessible from underneath chassis.

Particular care should be exercised in setting the signal generator accurately to 455 Kc. and in checking the adjustment of the screws in order to ensure that each is tuned to resonance.

The overall sensitivity of the I.F. channel measured from the grid of the converter to the output should be better than 50 microvolts for an output of 6 milliwatts.

2H.6 B.F.O. ALIGNMENT.

With the receiver adjusted as in the previous section:—

(a) Turn off the modulation from the signal generator.

(b) Turn B.F.O. control fully clockwise.

(c) Adjust the B.F.O. coil L16 by means of the adjusting screw in the top of the coil can until zero beat is heard in the speaker.

2H.7 R.F. SECTION ADJUSTMENTS.

Should it become necessary to realign the R.F. section of the receiver, it is essential that a thorough inspection first be made of the dial movement, particular attention being paid to (a) the angular relation of dial calibration plate and plates of the three gang tuning condenser, (b) tightness of set screws, and (c) the mechanical motion of the vernier drive assembly.

Before commencing the alignment, the dial calibration should be set against a reliable frequency source, preferably 1,000 Kc. crystal calibrator, which will give a signal at every 1,000 Kc. (i.e., harmonic of the crystal) on the dial.

If this equipment is not available the adjustments may be carried out using a signal generator checked against any available crystals of known frequency. This operation can be carried out using the transmitting crystals in the unit, and netting the receiver with the transmitter.

CALIBRATION.—With the equipment connected as for intermediate frequency alignment:—

(a) Set the receiver "Frequency" switch to 2-4.4 Mc/s. position.

(b) Connect calibrating signal (2 mc.) to grid of V1.

(c) Set the receiver tuning dial to 2 mc. and adjust the inductance of the L.F. oscillator coil L14 (by means of the screw protruding from the top of the coil can) for maximum output.

(d) Set the receiver tuning to 4 mc. and adjust the trimmer capacity of the oscillator coil L14 (by means of the screw in the bottom of the coil can) for maximum output.

H.F. BAND. RECEIVER SECTION.

Circuit Symbol	Valve Designation.	Pin No. according to RMA Code.							
		1	2	3	4	5	6	7	8
V1	1M5G R.F. Amp.	—	2.1	182	60	100	—	—	—
V4	1C7G Converter	—	4.25	190	84	—	108	—	155
V6	1M5G I.F. Amp.	—	6.35	200	60	—	—	425	—
V7	1K7G I.F. Amp. Det. 2	—	4.25	200	—	—	74	6.35	—
V8	1C7G B.F.O. Audio	—	4.25	122	30	—	13	2.1	202
V9	1L5G Output	—	8.5	200	202	—	6.35	—	12

M/O M.C.W. (Key down). TRANSMITTER SECTION.

Circuit Symbol	Valve Designation.	Pin No. according to RMA Code.								
		1	2	3	4	5	6	7	8	Cap.
V2	807 P.A.	11.2	272	—55	25	5.6	—	—	—	465
V5	807 Mod.	5.6	325	—	26	—	—	—	—	467
V6	6V6G Osc.	—	—	340	275	—45	275	5.6	0.3	
V9	1L5G A.F. Osc.	—	7.7	155	157	—	—	5.9	—	
C.O. M.C.W. (Key down).										
V2	807 P.A.	11.2	270	—36	25	5.6	—	—	—	455
V5	807 Mod.		325	—	26	—	—	—	—	460
V6	6V6G Osc.	—	—	150	185	—	185	5.9	6.1	—
V9	1L5G A.F. Osc.	—	7.7	155	157	—	—	5.6	—	

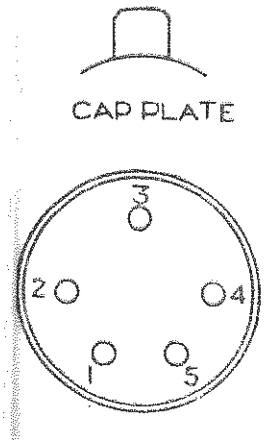

BOTTOM VIEW OF VALVE SOCKETS

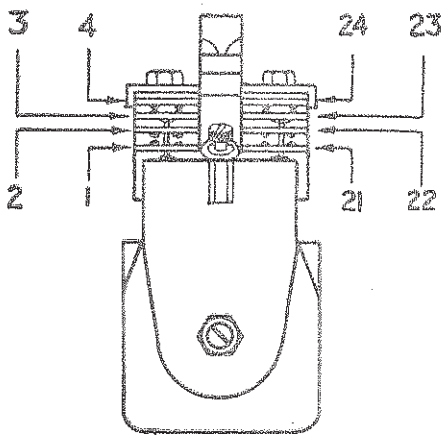

RELAY CONTACT CODE

PART 3.

POWER SUPPLY
UNIT
TYPE RC.72B.

POWER SUPPLY TYPE RC.72B

PART 3.

3.1 INTRODUCTION.

This H.T. Power Supply Unit consists of a motor generator for supplying the transmitter section and a synchronous vibrator unit for supplying the receiver section of the RC.8 Transmitter-Receiver Unit. The Power Supply Unit is operated from a primary power source of 12 volts obtained from a 12 volt accumulator.

As the equipment is designed for remote operation all switching is by means of relays controlled from the Transmitter-Receiver Unit, the Power Supply Unit being inoperable until the connecting cable from the Transmitter-Receiver Unit is connected.

As a safeguard against short circuits or overload, all primary power circuits in the Power Supply Unit are protected by fuses accessible through a hinged cover plate (which also holds spare vibrator and fuses) on the top of the unit.

3.2 CONSTRUCTION.

The chassis of the unit is mounted in a metal cabinet with mounting lugs on the base.

The cabinet has been specially treated to withstand the action of salt spray or corrosion before the application of the baked enamel finish. Suitable ventilation has been provided to allow continuous operation without excessive rise in temperature inside the unit.

3.3. CIRCUIT DESCRIPTION.

The input to the unit from the 12V. accumulator is fed through the main fuse F1 to the On-Off relay RL1, which, in conjunction with the "Operation" switch in the Transmitter-Receiver Unit, completes the primary power circuits of the unit, feeding the filament and relay circuits in the Transmitter-Receiver via the fuse F3 and filter network C6, L4, C13.

The H.T. output is controlled by the Send-Receive relay RL2, which in the normal position supplies the vibrator section of the unit via the fuse F3 and input filter L2, C7, C8, and C19 to the vibrator transformer T1. The H.T. output from this transformer is fed through the filter networks C14, L5, C12, C11, L3, C9 to the receiver section of the Transmitter-Receiver.

In the energised position the Relay RL2 open circuits L.T. input to the vibrator section and connects the 12V. DC to the motor generator MG1, the output from which is filtered by L2, C1, C2, C3, C4, and fed to the Transmitter section of the Transmitter-Receiver.

3.4 ROUTINE INSPECTION.

The equipment should be periodically removed from the cabinet and thoroughly examined in order that any apparent faults may be corrected before causing a breakdown in service.

To remove chassis from cabinet it is first necessary to disconnect the battery and connecting cables and then to remove the back, which is held in position with eight $\frac{1}{4}$ in. x $\frac{1}{8}$ in. machine screws, and then to remove the four holding down bolts on the underside of the cabinet. The chassis will then slide out of the back of the cabinet.

With the chassis removed from the cabinet as above, routine inspection should include the following:—

(a) Examine the individual components for signs of overloading, loose screws, or bad electrical connections.

(b) Examine the connecting cables and the associated plugs and sockets for good electrical connections.

(c) RELAYS.—Relay contacts should be regularly cleaned with fine emery cloth. Ascertain that all contacts make properly, i.e., control surfaces should be flat and parallel and the tension on the springs sufficient to allow good electrical contact to be maintained between the top set of contacts of H.T. change over relay.

(d) MOTOR GENERATOR.—Attention should be given to the following points:—

i. Commutators should be smooth and free from dust and grease.

ii. Brushes should make contact with commuta and fit freely without cessive side play in bru holders.

iii. Brush springs must ha sufficient tension.

iv. Bearings should be prope lubricated, "Shell FP.4" equivalent being reco mended.

(e) FUSES.—The fuses should securely held in their respecti clips.

(f) VIBRATOR.—The vibrator shou be properly seated in socket, a socket contacts clean and tight pins.

PART 4.

AERIAL FILTER
UNIT
TYPE RC.25.

AERIAL FILTER UNIT TYPE RC.25

PART 4.

4.1 INTRODUCTION.

This unit is used to eliminate the harmonic content of the emitted wave from the RC.8 Transmitter-Receiver Unit and in addition to match the output to any type of aerial.

The controls and their functions are as follow:—

(a) "AERIAL FEED" SWITCH (S1).—In position 1 connects the aerial tuning capacity in series with the aerial tuning inductance, and in position 2 in parallel with this inductance.

(b) "AERIAL CAPACITY SELECTOR" (S2).—Used to vary the capacity in the aerial circuit depending on position of S1.

(c) "AERIAL COUPLING" CONTROL (L1).—Used to vary the input coupling from the RC.8 by means of the variable inductance L1.

(d) "AERIAL TUNING" CONTROL (L2).—Used to load the aerial circuit by means of the variable inductor L2.

4.2 CONSTRUCTION.

The unit is assembled in a metal cabinet with mounting lugs on the base.
The cabinet has been specially treated to withstand the action of salt spray or corrosion before the application of the baked enamel finish.

4.3 TUNING INSTRUCTIONS.

Set "Aerial Coupling" Control 0.0. Adjust RC.8 Transmitter-Receiver Unit as outlined in Transmitter-Receiving tuning instructions (Chapter 2).

Set "Aerial Coupling" Control to 1.0 and adjust "Aerial Feed," "Aerial Capacity," and "Aerial Tuning" Controls for maximum reading of the aerial current meter.

There is no fixed method for predetermination of the correct setting of these controls as the settings will vary with the characteristic of the particular aerial in use, and also the frequency of the transmitter. As a general rule, the series tuned aerial circuit ("Aerial Feed" switch on position 1) is used with low resistance aerials and the parallel tuned circuit ("Aerial Feed" switch on position 2) with high resistance aerials. When tuned to resonance (maximum aerial current) increase the coupling (by means of the "Aerial Coupling" control) until the amplifier plate current meter on the RC.8 reads between 70 and 80 MA.

Repeat above tuning procedure, after readjustment of the "P.A. Loading" control on RC.8 for maximum dip on plate current meter.

Tabulate settings of all controls together with operating frequency on page provided at back of this book.

4.4 CIRCUIT DESCRIPTION.

The RC.8 is coupled to the RC.25 by means of the co-axial connectors on the respective units. The relay RL1 is used to eliminate the tuned circuits in the RC.25 when receiving and to allow the receiver and transmitter sections of the RC.8 to be operated on separate frequencies. In the "Transmit" position the output from the RC.8 is fed through the relay RL1 to the coupling inductance L1. The variable tap of this inductance in turn is fed through the aerial tuning inductance L2, the Aerial Feed Switch S1, and Aerial Capacity Switch S2 to the aerial via the aerial current meter M1.

4.5 ROUTINE INSPECTION.

(a) RELAYS.—Relay contacts should be regularly cleaned with fine emery cloth. Ascertain that all contacts make properly, i.e., control surfaces

should be flat and parallel, and the tension on the springs sufficient to allow good electrical contact to be maintained between the top set of contacts.

(b) INDUCTANCE UNITS. — The inductance units should be checked for mechanical motion of the movement and the presence of any dusty or foreign matter, particularly paying attention to the winding, as any foreign matter may short circuit individual turns of the Winding, causing a loss of power in the outpu
A small brush of the type used fo
painting in oil colours being recom
mended for cleaning. To preven
straining the mechanism of the uni
a clutch is incorporated in th
assembly of the front dial. This ca
be adjusted if necessary by removin
the knob, which will give access t
tension screw in the clutch assembly

(c) SWITCHES.—Switch contacts shoul
be inspected and cleaned if neces
sary.

PART 5.

REMOTE CONTROL
UNIT
TYPE RC.78A

REMOTE CONTROL UNIT TYPE RC.78A

PART 5.

5.1 INTRODUCTION.

This Remote Control Unit has been specially designed for remote operation of the RC.8 Transmitter-Receiver equipment and when used controls all operating functions of the Transmitter-Receiver except tuning.

This unit is housed in a non-ferrous metal cabinet, the hinged front of which mounts the key and when open serves as an operating desk.

The headphones, microphone, and key are permanently wired to the control panel, which mounts all operating controls.

The controls and their functions are as follow:—

(a) "ON-OFF" SWITCH.—The complete equipment may be turned "On" or "Off" by means of the "On-Off" switch (S1), which actuates the necessary relay in the Power Supply Unit to perform this function.

(b) "SEND M.C.W.-REC.R/T." SWITCH. —This switch (S2) in the "Send-M.C.W." position, energises the Send-Receive relay in Transmitter-Receiver Unit which in turn changes the associated circuits in the Aerial Filter and Power Supply Units for M.C.W. transmission.

With the switch S2 set in "Rec.-R/T" position, the Transmitter-Receiver equipment operates as a receiver. Pressing the pressel switch on the hand microphone (M) energises the microphone relay in the Transmitter-Receiver Unit, which in turn completes the necessary circuits for R/T. transmission.

(c) "VOLUME" CONTROL. — The "Volume" control R3 is used to attenuate the A.F. output from the Transmitter-Receiver Unit when the "Send-M.C.W. Rec. R/T." switch S2 is in the "Rec.R/T." position. When in the "Send-M.C.W." position fixed attenuation of the M.C.W. side tone is accomplished by the potentiometer network R4-R5.

(d) "SPEAKER-PHONES" SWITCH. — Provision is made for connection of a speaker to the Remote Control Unit. This switch is provided to enable either the headphones in the Unit or the speaker to be used as required.

5.2 OPERATING INSTRUCTIONS.

With the equipment connected as in Chapter 1A.1 and the Transmitter-Receiver circuits correctly tuned for R/T. transmission, set the "Operation" switch on the Transmitter-Receiver panel to "Remote."

The operation of the equipment is then controlled by the Remote Control Unit, the operation of which is self-explanatory after reading the previous section.

CAUTION.—Always set the "Send-M.C.W. Rec.R/T." switch to the "Receive" position before turning the equipment on and allow 30 seconds for the transmitter section valve heaters to reach operating temperature before changing to "Send."

5.3. ROUTINE INSPECTION.

The remote control panel should be periodically removed from the cabinet and thoroughly examined in order to rectify any apparent faults which may cause a breakdown in service. The examination should include the following:—

1. Check the connections to the terminal board on the side of the unit and tighten any loose screws.
2. Examine the individual components for any signs of loose screws or bad electrical connections.
3. Check the panel and indicator lights and replace if necessary.
4. Examine the switch and volume control contacts and clean if necessary with a piece of cloth moistened with carbon tetra chloride, if dirty.
5. Check the operation of the unit in conjunction with the other units of the equipment.

PART 6

PARTS LISTS.

PARTS LISTS.

Transmitter-Receiver Unit — Type RC.8.

Power Supply Unit — Type RC.72B.

Aerial Filter Unit — Type RC.25.

Remote Control Unit — Type RC.78A.

TRANSMITTER RECEIVER TYPE RC.8.

ELECTRICAL PARTS LIST WITH CIRCUIT SYMBOL DESIGNATION.

RESISTORS.

Symbol	Function	Description.	Rating	Tol.	Part No.	Manuf.
R1	P.A. Grid Resistor	15,000 ohm Carbon	1W	10%	PR225	7
R2	P.A. Grid Suppressor	100 ohm Carbon	½W	10%	PR406	2
R3	P.A. Plate Suppressor	33 ohm (3-100 ohm ½W Carbon)			PR406	2
R4	C.O. Bias	300 ohm W. Wound	½W	10%	PR258	7
R5	P.A. Screen Suppressor	20 ohm W. Wound	½W	10%	PR231	7
R6	OSC. Grid Resistor	100,000 ohm Carbon	½W	10%	PR103	7
R7	R.F. Plate Feed	10,000 ohm Carbon	½W	10%	PR164	7
R8	P.A. Cathode	250 ohm W. Wound	3W	10%	PR420	7
R9	OSC. Fil	13 ohm W. Wound	5W	10%	PR111	7
R10	P.A. Screen Feed	30,000 ohm W. Wound	10W	10%	PR109	7
R11	Keying Filter	200 ohm W. Wound	1W	10%	PR207	7
R12	R.F. Screen Resistor	50,000 ohm Carbon	½W	10%	PR160	7
R13	VOL. CONTROL	1 meg. Varb. pot 2W.	2W	10%	PR275	1
R14	Screen Dropper	100,000 ohm Carbon	½W	20%	PR103	7
R15	OSC. Screen Feed	50,000 ohm Carbon	2W	10%	PR363	7
R16	Netting Feed	20,000 ohm W. Wound	8W	10%	PR397	7
R17	OSC. Screen Dropper	25,000 ohm (2-50,000 ohm) Carbon	1W	10%	PR115	7
R18	CONV. Grid Resistor	50,000 ohm Carbon	½W	10%	PR160	7
R19	CONV. Plate Filter	10,000 ohm Carbon	½W	10%	PR164	7
R20	C.O. Plate Feed	10,000 ohm W. Wound	5W	10%	PR400	7
R21	OSC. Feed	3,500 ohm W. Wound	8W	10%	PR108	7
R22	MOD. Screen Resistor	25,000 ohm W. Wound	10W	10%	PR512	7
R23	CONV. Plate Feed	10,000 ohm Carbon	½W	10%	PR164	7
R24	CONV. Screen Feed	30,000 ohm Carbon	½W	10%	PR151	7
R25	Mixer, Plate Feed	5,000 ohm Carbon	½W	10%	PR250	7
R26	MOD. Bias	250 ohm W. Wound	3W	10%	PR420	7
R27	Side Tone Attenuator	25,000 ohm Carbon	½W	10%	PR155	7
R28	1st I.F.T. Loading	100,000 ohm Carbon Part of I.F.T. PT575	½W	10%	PR103	7
R29	Mod. Grid Load	25,000 ohm Carbon	½W	10%	PR155	7
R30	Mod. Grid Load	75,000 ohm Carbon	½W	10%	PR106	7
R31	I.F. Plate Feed	5,000 ohm Carbon	½W	10%	PR250	7
R32	2nd I.F. Grid Load	100,000 ohm Carbon Part of I.F.T. PT575	½W	10%	PR103	7
R33	RCVR O.P. Grid Resistor	500,000 ohm Carbon	½W	10%	PR245	7
R34	2nd I.F. Screen	750,000 ohm Carbon	½W	10%	PR267	7
R35	2nd I.F. Plate Feed	5,000 ohm Carbon	½W	10%	PR250	7
R36	Diode Load	1 megohm Carbon	½W	10%	PR246	7
R37	Diode Filter	50,000 ohm Carbon	½W	10%	PR160	7
R38	A.F. Osc. H.T. Feed	20,000 ohm W. Wound	8W	10%	PR397	7

R39	A.F. Grid Resistor	1 megohm Carbon	½W	10%	PR246	7
R40	Fil Resistor	16.6 ohm W. Wound	1W	5%	PR374	7
R41	O.P. Load	300 ohm W. Wound	½W	10%	PR258	7
R42	B.F.O. Grid	5,000 ohm Carbon	½W	10%	PR250	7
		Part of B.F.O. Coil PT654				
R43	A.F. Plate Feed	200,000 ohm Carbon	½W	10%	PR255	7
R44	Spkr. Load	3½ ohm W. Wound	3W	5%	PR227	7
R45	B.F.O. Plate	500,000 ohm Carbon	½W	10%	PR245	7
R46	A.F. Screen	100,000 ohm Carbon	½W	10%	PR103	7
R47	A.F. Plate Filter	50,000 ohm Carbon	½W	10%	PR160	7
R48	Fil. Resistor	16.6 ohm W. Wound	1W	5%	PR374	7

CONDENSERS.

C1	Osc. Grid Con.	100 uufd. Ceramicon N.P.O.	500WV	±2½%	PC456	2
C2	Aer. Loading Cond.	.00025 mfd. Mica	1500WV	10%	PC492	2
C3	Aer. Loading Cond.	.0001 mfd. Mica	1500WV	10%	PC491	2
C4	R.F. Bypass P.A. Grid Bias	.002 mfd. Mica	600WV	10%	PC168	3
C5	H.F. Aer. Coil Trimmer	3-26 uufd. 7 Plate Vars., Part of P.T.567			PC342	1
C6	L.F. Aer. Coil Trimmer	3-26 uufd. 7 Plate Vars., Part of P.T. 568			PC342	1
C7	M.O. Loading Cond.	.0003 mfd Silver Mica	1000WV	±2½%	PC236	3
C8	RCVR. Tuning Cond.					
a	AER. Tuning Section	13-310 uufd. per section			PC139	1
b	R.F. Tuning Section					
c	OSC. Tuning Section					
C9	Parallel Tuning	.00002 mfd. Ceramicon N750	500WV	±5%	PC195	2
C10	C.O. Cathode Bypass	.001 mfd. Mica	600WV	10%	PC108	3
C11	Fil. Bypass	1 mfd. Paper	200WV	20%	PC154	3
C12	R.F. Coupling	.002 mfd. Mica	600WV	10%	PC168	3
C13	M.O. Cathode Bypass	.01 mfd. Mica	600WV	10%	PC145	3
C14	P.A. Cathode Bypass	.01 mfd. Mica	600WV	10%	PC145	3
C15	R.F. Screen Bypass	.1 mfd. Paper	200WV	20%	PC493	3
C16	R.F. Plate Feed Bypass	.05 mfd. Paper	400WV	20%	PC498	2
C17	Keying Filter	.05 mfd. Paper	200WV	20%	PC105	2
C18	Coupling Cond.	.00005 mfd. Mica	600WV	10%	PC141	3
C19	Osc. Screen Bypass	.003 mfd. Mica	600WV	10%	PC157	3
C20	R.F. Coupling	.01 mfd Mica	1000WV	10%	PC491	2
C21	P.A. Screen Bypass	.003 mfd. Mica	600WV	10%	PC157	3
C22	P.A. Plate Feed Bypass	.002 mfd. Mica	1000WV	10%	PC505	3
C23	H.F. R.F. Coil Trimmer	3-26 uufd. 7 Plate VARB. Part of P.T.569			PC342	1
C24	Vol. Control Filter	.002 mfd. Mica	600WV		PC168	3
C25	L.F. R.F. Coil Trimmer	3-26 uufd. 7 Plate VARB. Part of PT570			PC342	1

Symbol	Function	Description.	Rating	Tol.	Part No.	Manuf.
C26	P.A. Tuning	12-480 uufd. SLF			PC416	1
C27	OSC. Tuning	14-436 uufd.			PC137	1
C28	Parallel Tuning	.00002 mfd. Ceramicon N750	500WV	±5%	PC195	2
C29	Osc. Grid Cond.	.0001 mfd. Mica	600WV	10%	PC110	3
C30	C.O. Plate Feed Bypass	.01 mfd. Mica	600WV	10%	PC145	3
C31	H.F. Osc. Coil Trimmer	3-26 uufd. 7 Plate Varb., Part of P.T.571			PC342	1
C32	H.F. Padder	.003 mfd. Mica, Part of P.T.571	600WV	10%	PC480	3
C33	L.F. Osc. Coil Trimmer	3-26 uufd. 7 Plate Varb., Part of P.T.572			PC342	1
C34	L.F. Padder	.0015 mfd. Mica	600WV	2½%	PC200	3
C35	Plate Coupling Condenser	.001 mfd. Mica	600WV	10%	PC108	3
C36	M.O. Plate Feed Bypass	.01 mfd. Mica	600WV	10%	PC145	3
C37	Osc. Plate Filter	10 mfd. Electrolytic	350PV	20%	PC129	2
C38	Mod. Screen Bypass	.1 mfd. Metal-cased Paper	600WV	20%	PC149	2
C39	Mod. Plate Bypass	.004 mfd. Mica	2000WV	10%	PC143	18
C40	Conv. Screen Bypass	.1 mfd. Paper	200WV	20%	PC493	2
C41	Conv. Plate Bypass	.1 mfd. Paper	200WV	20%	PC493	2
C42	Mod. Grid Bypass	.00025 mfd. Mica	600WV	10%	PC126	3
C43	Mod. Cathode Bypass	10 mfd. Electrolytic	350PV	20%	PC129	2
C44	I.F. Tuning Cond.	100 mmfd. Ceramicon N.P.O., part of P.T.575	500WV	±2½%	PC456	2
C45	R.F. Bypass Mod. Cathode	.003 mfd. Mica	600WV	10%	PC480	3
C46	IF Tuning Cond.	100 mmfd. Ceramicon N.P.O., part of P.T.575	500WV	±2½%	PC456	2
C47	Microphone Coupling	2 mfd. Paper	200WV	20%	PC474	2
C48	Fil. Bypass	.5 mfd. Paper with Lead	200WV	20%	PC118	2
C49	IF Plate Feed Bypass	.1 mfd. Paper	200WV	20%	PC493	2
C50	IF Screen Bypass	.05 mfd. Paper	400WV	20%	PC498	2
C51	IF Tuning Cond.	100 mmfd. Ceramicon N.P.O., part of P.T.575	500WV	±2½%	PC456	2
C52	IF Tuning Cond.	.0001 mfd. Ceramicon N.P.O., Part of P.T.575	500WV	±2½%	PC456	2
C53	M.C.W. Feed	.002 mfd. Mica	600WV	10%	PC168	3
C54	Fil. Bypass	250 mfd. Electrolytic	15WV	20%	PC130	2
C55	Coupling Cond. for Netting	.002 mfd. Mica	600WV	10%	PC168	3
C56	2nd IF Screen Bypass	.1 mfd. Paper	200WV	20%	PC493	2
C57	2nd IF Plate Feed Bypass	.05 mfd. Paper	400WV	20%	PC498	2
C58	IF Tuning Cond.	.0001 mfd. Ceramicon N.P.O., Part of P.T.210	500WV	±2½%	PC456	2
C59	IF Tuning Cond.	.0001 mfd. Ceramicon N.P.O., Part of P.T.210	500WV	±2½%	PC456	2
C60	Diode Filter Cond.	.0001 mfd. Mica	600WV	10%	PC110	3
C61	Aud. Coupling Cond.	.01 mfd. Mica	600WV	10%	PC145	3
C62	AF Grid Feed	.01 mfd. Mica	600WV	10%	PC145	3

C63	*Diode Load Bypass*	.0001 mfd. Mica	600WV	10%	PC110	3
C64	Fil. Bypass	.1 mfd. Paper	200WV	20%	PC493	2
C65	Headphone Bypass	.25 mfd. Metal-clad Paper	400WV	20%	PC122	2
C66	B.F.O. Grid Cond	.001 mfd. Mica, Part of P.T. 654	600WV	10%	PC108	3
C67	O.P. Plate Bypass	.002 mfd. Mica	600WV	10%	PC168	3
C68	B.F.O. Tuning Cond.	4.2-9 uufd. 5-plate Varb.			PC487	1
C69	B.F.O. Parallel Tuning	.0001 mfd. Silver Mica, Part of P.T.654	600WV	2½%	PC294	1
C70	B.F.O. Plate Coupling	.002 mfd. Mica, Part of P.T.654.	600WV	10%	PC168	3
C71	RCVR O.P. Screen Bypass	.1 mfd. Metal-clad Paper	600WV	20%	PC107	2
C72	L.T. Bypass	250 mfd. Electrolytic	15WV	20%	PC130	2
C73	Fil. Bypass	250 mfd. Electrolytic	15WV	20%	PC130	2
C74	Screen Bypass	.1 mfd. Paper	200WV	20%	PC493	2
C75	Plate Bypass	.0001 mfd. Mica	600WV	10%	PC110	3
C76	Plate Load Bypass	.0001 mfd. Mica	600WV	10%	PC110	3

INDUCTANCES.

L1	H.F. Aer. Coil	Coil Assy. 4.4-10 Mc/s.	PT567	1
L2	P.A. Grid Choke	4Pi R.F. Choke 1.6 mille.H.	PT340	1
L3	L.F. Aer. Coil	Coil Assy. 2-4.4 Mc/s.	PT568	1
L4	M.O. Coil	4Pi R.F. Choke 1.6 mille-H.	PT220	1
L5	R.F. Plate Choke Rcvr.	M.O. Tuning Coil 1.95-5.05 Mc/s.	PT340	1
L6	P.A. Tuning Inductor	4Pi R.F. Choke .15 mille.H.	PT565	1
L7	Osc. Cathode Choke	Varb. Inductor 68 turns 2¼ in. Dia.	PT574	1
L8	H.F. R.F. Coil	6Pi R.F. Choke 2.85 milli.H.	PT569	1
L9	P.A. Plate Choke	Coil Assy. 44-10 Mc/s.	PT161	1
L10	L.F. R.F. Coil	Coil Assy. 2-4.4 Mc/s.	PT570	1
L11	C.O. Coil	C.O. Tuning Coil 1.95-5.05 Mc/s.	PT221	1
L12	H.F. Osc. Coil Rcvr.	Coil Assy. 4.4-10 Mc/s.	PT571	1
L13	M.O. Plate Choke	4Pi R.F. Choke 1.6 mille.H.	PT340	1
L14	L.F. Osc. Coil Rcvr.	Coil Assy. 2-4.4 Mc/s.	PT572	1
L15	Mod. Plate Choke	4Pi R.F. Choke .15 milli.H.	PT574	1
L16	B.F.O. Coil	455 Kc/s B.F.O. Coil Assy.	PT654	1

TRANSFORMERS.

T1	Modulation Transformer	8-8H 100 M/A	PT219	1
T2	1st I.F. Transformer	455 Kc/s Perm. Tuned	PT575	1
T3	Mic. Transformer	60 ohm Primary	PT303	1
T4	2nd I.F. Transformer	455 Kc/s. Perm. Tuned	PT575	1
T5	3rd I.F. Transformer	455 Kc/s. Perm. Tuned	PT210	1
T6	O.P. Transformer	4 Windings:—	PT624	1
		Secondary 1 - 500 ohm		
		Secondary 2 - 500 ohm		
		Secondary 3 - 3½ ohm imp.		

Symbol	Function	Description.	Rating	Tol.	Part No.	Manuf.
		MISCELLANEOUS.				
Y1	Co-axial Connector				27/250	11
Y2	Aer. Terminal				A128/552	1
Y3	Aer. Filter Relay Socket				A102/253	1
Y4	Speaker	5 in. Diam. Permag.			PM205	19
Y5	Earth Terminal				A126/552	1
Y6	Osc. Tuning Dial				A106/255	1
Y6	P.A. Tuning Dial				A106/255	1
Y7	Rcvr. Tuning Dial				A154/250-1	14
Y8	Aer. SW Knob				66/495	1
Y9	Pointer Knob				222/239	1
Y10	B.F.O. Pointer Knob				A113/552	1
Y11	Dial Light Holder				A102/255-1	1
Y12	Pilot Light Holder				A105/432	1
Y13	Knob (Viariable Inductor)				28/495	1
	Headphones	Low Imp. with Lead and Plug			PM239	17
	Microphone	Hand Type with Lead, Screw, and Plug			PM822	17
	Key	W/T 8 Amp with Lead and Plug			PM821	17
J1	Phone Jack				A101/481-1	1
J2	Microphone Jack				A103/266	1
J3	Key Jack				A103/266	1
P1	Remote Control Plug				A100/276	1
P2	Power Inlet Plug				A100/276	1
M1	P.A. Plate Current Meter	0-100 M.A. D.C. 2 in. Flush Type			PM818	15
		VALVES.				
V1	R.F. Amplifier	1M5G			PM629	6
V2	Class "C" RF Amplifier	807			PM282	6
V3	R.F. Oscillator	6V6G			PM383	6
V4	Converter	1C7G			PM201	6
V5	Modulator	807			PM282	6
V6	1st I.F. Amplifier	1M5G			PM629	6
V7	2nd I.F. Amplifier	1K7G			PM285	6
V8	Aud. Amp and B.F.O.	1C7G			PM201	6
V9	Rcvr. O.P. and A.F. Osc.	1L5G			PM630	6

Symbol	Function	Description.	Rating	Tol.	Part No.	Manuf.
		PILOT LIGHTS.				
PL1	Osc. Tuning Dial Light	3.8V .3 amp. E.S.			PM474	16
PL2	Panel Light (Xmitter End)	3.8V .3 amp. E.S.			PM474	16
PL3	P.A. Tuning Dial Light	3.8V .3 amp. E.S.			PM474	16
PL4	Panel Light (Rcvr. End).	3.8V .3 amp. E.S.			PM474	16
		VALVE SOCKETS.				
	Octal Socket	Wafer Type			PM532	1
	Octal Socket	Ceramic Type			PM558	12
	5-Pin Socket	Bakelite (amphenol)			PM211	12
	5-Pin Socket	Ceramic Type			PM316	12
		Xtals.				
	X1, X2, X3, X4	RC41J Type Holder and Xtal Assembly			RC41J	1
		SWITCHES.				
S1	Aerial Coupling Switch	Ceramic 1D 4W			PM192	4
S2 a-i	RCVR. Frequency Change Switch	3D. 9 Pole 2W.			PM167	1
S3 a-e	C.O.-M.O. Switch	Ceramic 4D. 5W.			PM440	4
S4 a-b	Emission Switch	1D. 3 Pole 3W.			PM696	1
S5	Netting	S.P. D.T. Spring Return			PM744	5
S6 a-i	Operation	3D. 9 Pole 3W.			PM166	1
S7	Send-Receive	SP. DT.			PM743	5
S8	Standby-normal	SP. DT.			PM743	5
S9	B.F.O. Switch	Part of PC487				1
S10	Speaker ON-OFF	SP. DT. Toggle			PM363	10
		RELAYS.				
RL1	Press to Talk	100 ohm 1CO 2M			PM202	8
RL2	Keying	100 ohm 2M 1M			PM193	8
RL3	Send-Receive	100 ohm 1M, 1B, 1CO, 1M, 2CO			PM203	8
RL4	Aerial Changeover	84 ohm Ceramic 1CO 1CO			PM711	1

POWER SUPPLY UNIT TYPE RC.72B.

ELECTRICAL PART LIST WITH CIRCUIT SYMBOL DESIGNATION.

CONDENSERS.

Symbol	Function	Description.	Rating	Tol.	Part No.	Manuf.
C1	Trans. H.T. Filter	16 mfd. Electrolytic	525PV	20%	PC481	2
C2	Trans. H.T. Filter	16 mfd. Electrolytic	525PV	20%	PC481	2
C3	Trans. H.T. Filter	16 mfd. Electrolytic	525PV	20%	PC481	2
C4	Trans. H.T. Filter	16 mfd. Electrolytic	525PV	20%	PC481	2
C5	Input Filter	.85 mfd. Paper	100WV	20%	PC267	2
C6	L.F. Filter	.5 mfd. Paper	200WV	20%	PC251	2
C7	Vibrator Input Filter	.5 mfd. Paper	200WV	20%	PC251	2
C8	Vibrator Input Filter	.01 mfd. Mica	600WV	10%	PC145	2
C9	Recvr. H.T. Filter	16 mfd. Electrolytic	525PV	20%	PC481	2
C10	Vibrator Input Filter	250 mfd. Electrolytic	15PV	20%	PC366	2
C11	Vibrator Output Filter	.01 mfd. Mica	600WV	10%	PC145	3
C12	Recvr. H.T. Filter	8 mfd. Electrolytic	525PV	20%	PC470	2
C13	L.T. Filter	.5 mfd. Paper	200WV	20%	PC251	2
C14	Vibrator Output Filter	.01 mfd. Mica	600WV	10%	PC145	3
C15	Vibrator Spark Suppressor	.004 mfd. Mica	2000VT	10%	PC143	18
C16	Vibrator Spark Suppressor	.05 mfd. Paper	200WV	20%	PC494	2

INDUCTORS

L1	Trans. H.T. Output Filter	5 Henries 200M.A. 75 ohm			PT555	1
L2	Vibrator Input Filter	130 u Henries			PT520	1
L3	Rec. H.T. Output Filter	9 Henries 480-500 ohm			PT646	1
L4	L.T. Output Filter	130 u Henries			PT520	1
L5	Vib. Output Filter	1.6 milli Henries 100 M.A.			PT340	1

RESISTORS.

R1	Transmitter H.T. Filter Bleed	50,000 ohm Carbon	1W	10%	PR115	7
R2	Transmitter H.T. Filter Bleed	50,000 ohm Carbon	1W	10%	PR115	7
R3	Transmitter H.T. Filter Bleed	50,000 ohm Carbon	1W	10%	PR115	7
R4	Transmitter H.T. Filter Bleed	50,000 ohm Carbon	1W	10%	PR115	7

TRANSFORMERS.

T1	Vibrator Transformer	12V. Input 200V. 60 M.A. Output			PT576	1

		RELAYS		
RL1	ON-OFF	12V. 1M. 1M.	PM113	1
RL2	H.T. Changeover	12V. 1C.O. 1C.O.	PM708	
		FUSES.		
F1	Main	60 amp 5/16 in. Dia. Cap.	PM108	13
F2	ON-OFF Line	5 amp 3/16 in. Dia. Cap.	PM894	13
F3	L.T. Output	5 amp 3/16 in. Dia. Cap.	PM894	13
F4	Vibrator Input	5 amp 3/16 in. Dia. Cap.	PM894	13
		MOTOR GENERATOR.		
MG1	Transmitter H.T. Supply	12V. 470V. 210 M.A.	PM872	9
		VIBRATOR.		
V1B1	Rec. H.T. Supply	12V. 6 Pin Sync.	PM415	1
		PLUG.		
P1	Output Plug	6 Pin Jones Type	A100/276	1
		SOCKET.		
	Vibrator Socket	6 Pin Wafer Type	PM146	1

AERIAL FILTER UNIT TYPE RC.25.

ELECTRICAL PARTS LIST WITH CIRCUIT SYMBOL DESIGNATION.

CONDENSERS.

Symbol	Function	Description.	Rating	Tol.	Part No.	Manuf.
C1	Aerial Tuning	.00025 mfd.	1500WV	±10%	PC492	2
C2	Aerial Tuning	.0001 mfd.	1500WV	±10%	PC491	2
C3	Aerial Tuning	.00005 mfd.	1500WV	±10%	PC490	2
C4	Aerial Tuning	.00005 mfd.	1500WV	±10%	PC490	2
		INDUCTORS.				
L1	Aerial Tuning	Varb. Inductor 4 Turns 2¼ in. Dia.			PT566	1
L2	Aerial Coupling	Varb. Inductor 68 Turns 2¼ in. Dia.			PT565	1
		METER.				
M1	Aerial Current	0-1 amp R.F. 2 in. Diam. Flush Type			PM592	15
		SWITCHES.				
S1	Aerial Feed	Ceramic 1 Deck, 2 Position, Series Parallel			PM879	4
S2	Aerial Capacity	Ceramic 1 Deck, 6 Position, Shorting			PM878	4
		SOCKETS.				
Y1	R.F. Input	Co-axial Connector			27/250	11
Y2	Relay Input	Insulated Banana			A102/253	1
Y3	Aerial Terminal	Spring Terminal			A128/552	1
		RELAY.				
RL1	Aerial Changeover	Ceramic 12V. D.C. 1 C.O. 1 C.O.			PM711	1

REMOTE CONTROL UNIT TYPE RC.78A.

ELECTRICAL PARTS LIST WITH CIRCUIT SYMBOL DESIGNATION.

SWITCHES.

Symbol	Function	Description.	Rating	Tol.	Part No.	Manuf.
S1	ON-OFF Switch	S.P. S.T. Toggle			PM890	10
S2A-D	SEND-RECEIVE	1 Deck, 4 Pole, 2 Way			PM740	1
S3	SPEAKER-TEL	S.P. D.T. Toggle			PM363	10

RESISTORS.

R1	Pilot Light Series	40 ohm W. Wound	3W	10%	PR419	7
R2	Pilot Light Series	40 ohm W. Wound	3W	10%	PR419	7
R3	Vol. Control	1,000 ohm W.W. Potentiometer	3W	20%	PR494	1
R4	Attenuator	5,000 ohm Carbon	$\frac{1}{2}$W	10%	PR250	7
R5	Attenuator	20 ohm W. Wound	$\frac{1}{2}$W	10%	PR231	7

PILOT LIGHTS.

PL1	Panel Light	3.8V .3 amp Screw Fitting			PM474	16
PL2	Receive — R.T. Indicator	6-8V. .15 amp Bayonet Fitting			PM396	16
PL3	M.C.W. Indicator	6-8V .15 amp Bayonet Fitting			PM396	16

MISCELLANEOUS

T	Head Phones	Low Imp. with Lead			PM162	17
M	Microphone	Hand Type with Switch and Lead			PM161	17
K	Key	W/T 8 amp with Lead			PM163	17

LIST OF MANUFACTURERS

1. Radio Corporation Pty. Ltd.,
   126 Grant Street, South Melbourne, Vic.
2. Ducon Condensers Co. Pty. Ltd.,
   73 Burke Street, Waterloo, N.S.W.
3. Simplex Products Pty. Ltd.,
   716 Parramatta Road, Petersham, N.S.W.
4. Technico Ltd.,
   Carrington Street, Marrickville, N.S.W.
5. H. A. Chivers,
   140 King Street, Melbourne, Vic.
6. Amalgamated Wireless Valve Co.,
   47 York Street, Sydney, N.S.W.
7. International Resistance Co.,
   44 Addison Road, Marrickville, N.S.W.
8. Standard Telephones and Cables Pty. Ltd.,
   252 Botany Road, Alexandria, N.S.W.
9. F. W. Davey and Co.,
   25 Berkeley Street, Carlton, Vic.
10. Alpha Engineering Co.,
    62 Layton Street, Camperdown, N.S.W.
11. His Master's Voice,
    2 Parramatta Road, Homebush, N.S.W.
12. International Radio Co. Ltd.,
    403 Bourke Street, Melbourne, Vic.
13. F. L. Yott,
    219 Queensberry Street, Carlton, Vic.
14. Amalgamated Wireless A'asia Ltd.,
    45-47 York Street, Sydney, N.S.W.
15. Vane Instrument Co.,
    90 Victoria Street, Ashfield, N.S.W.
16. Osram: British General Electric Co. Pty. Ltd.,
    388 Bourke Street, Melbourne, Vic.
17. Postmaster-General's Department,
    Melbourne, Vic.
18. T.C.C.: Australasian Engineering Equipment,
    476 Latrobe Street, Melbourne, Vic.
19. Rola Co. Pty. Ltd.,
    The Boulevard, Richmond, Vic.

PART 7.

ILLUSTRATIONS.

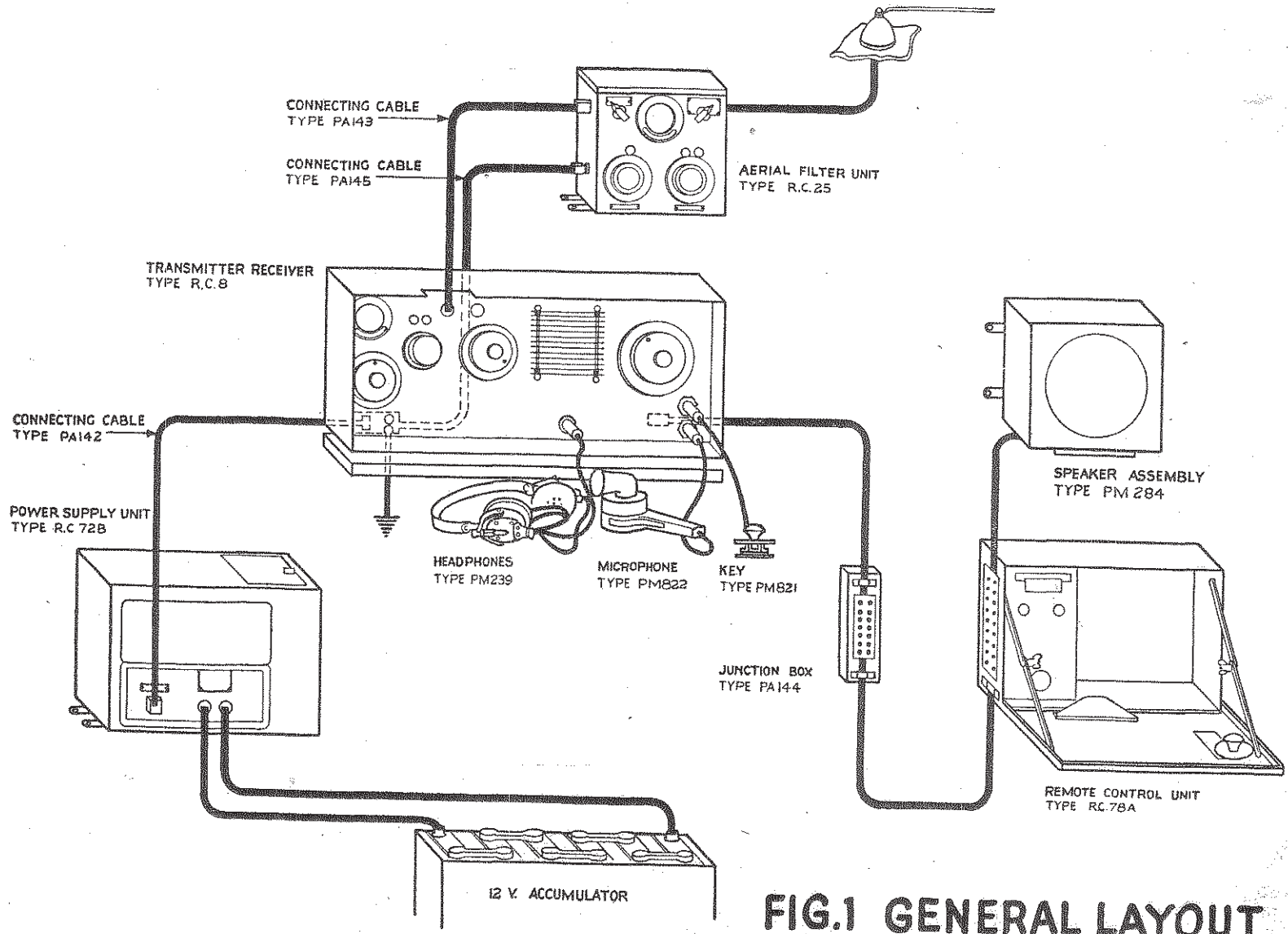

FIG.1 GENERAL LAYOUT

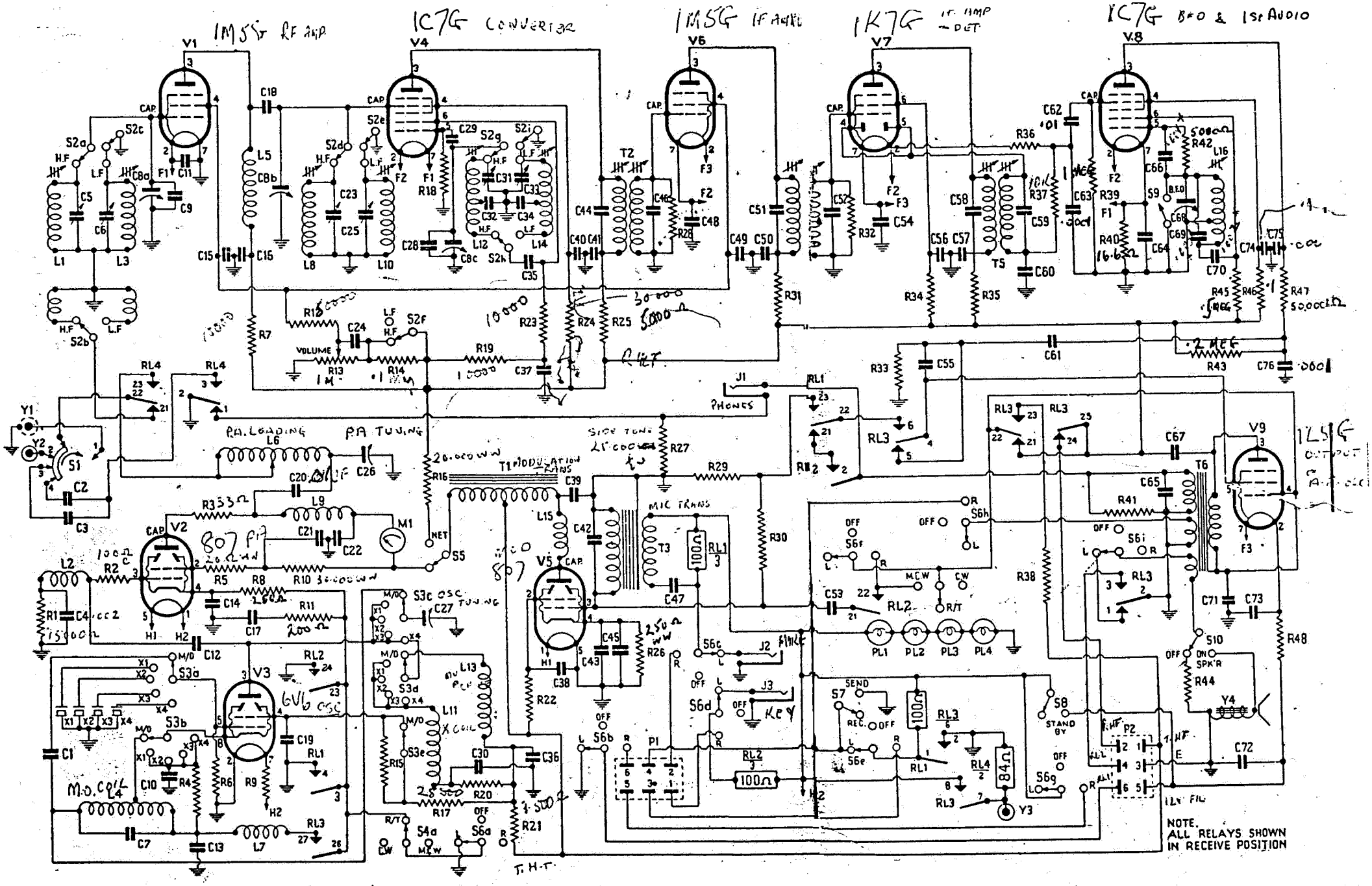

FIG. 2. SCHEMATIC TRANSMITTER RECEIVER TYPE R.C.8

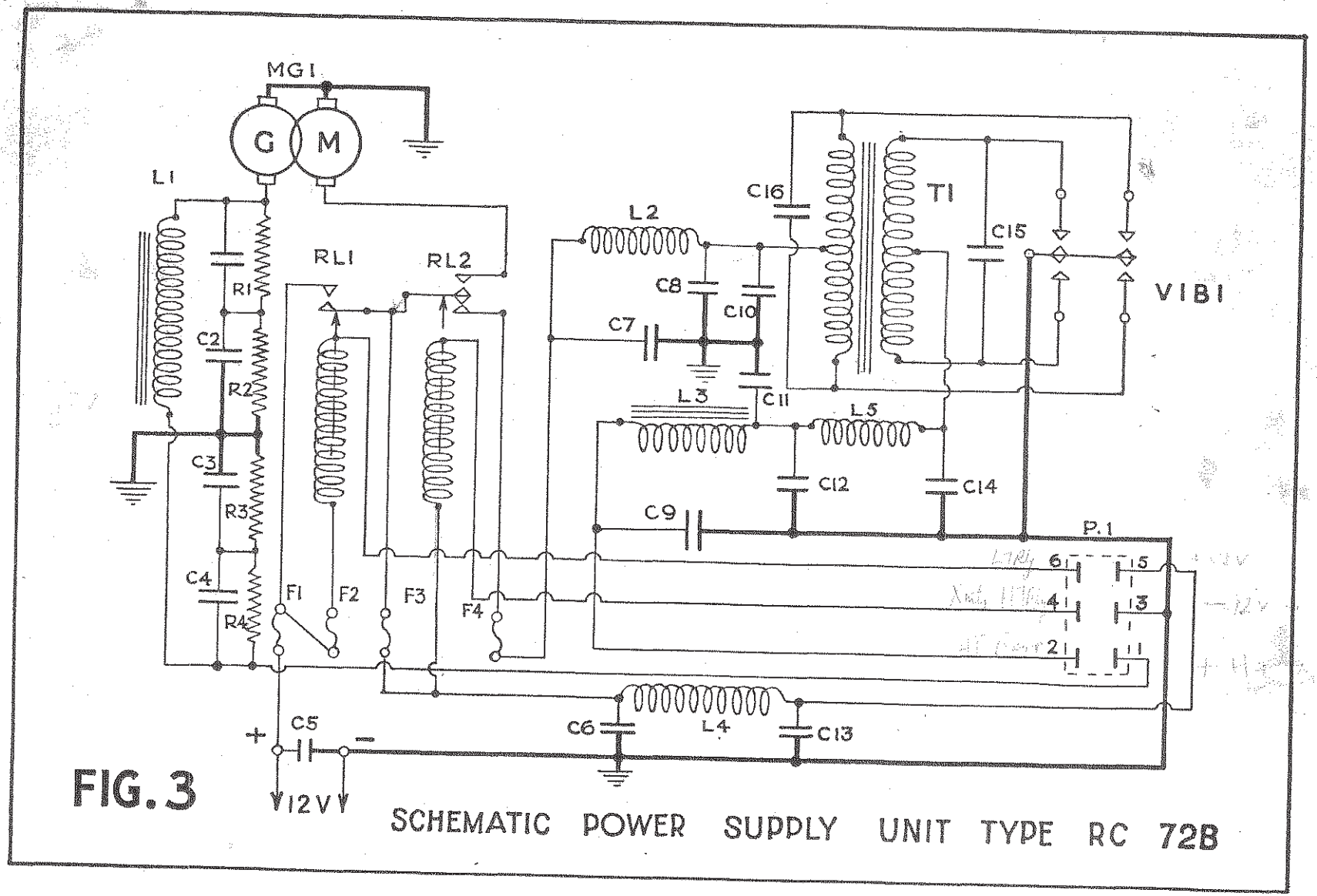

FIG. 3

SCHEMATIC POWER SUPPLY UNIT TYPE RC 72B

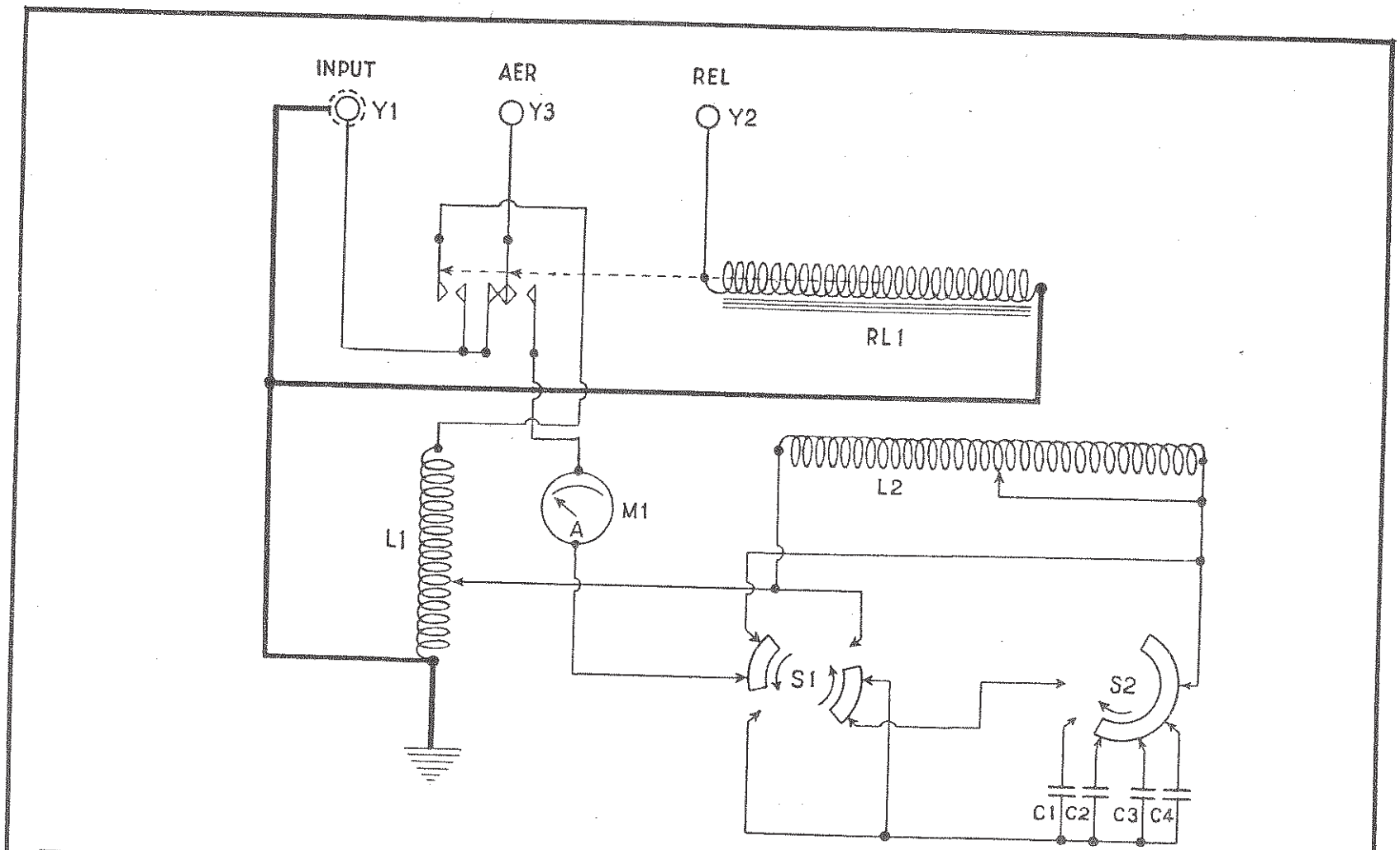

FIG. 4 SCHEMATIC AERIAL FILTER UNIT TYPE RC 25

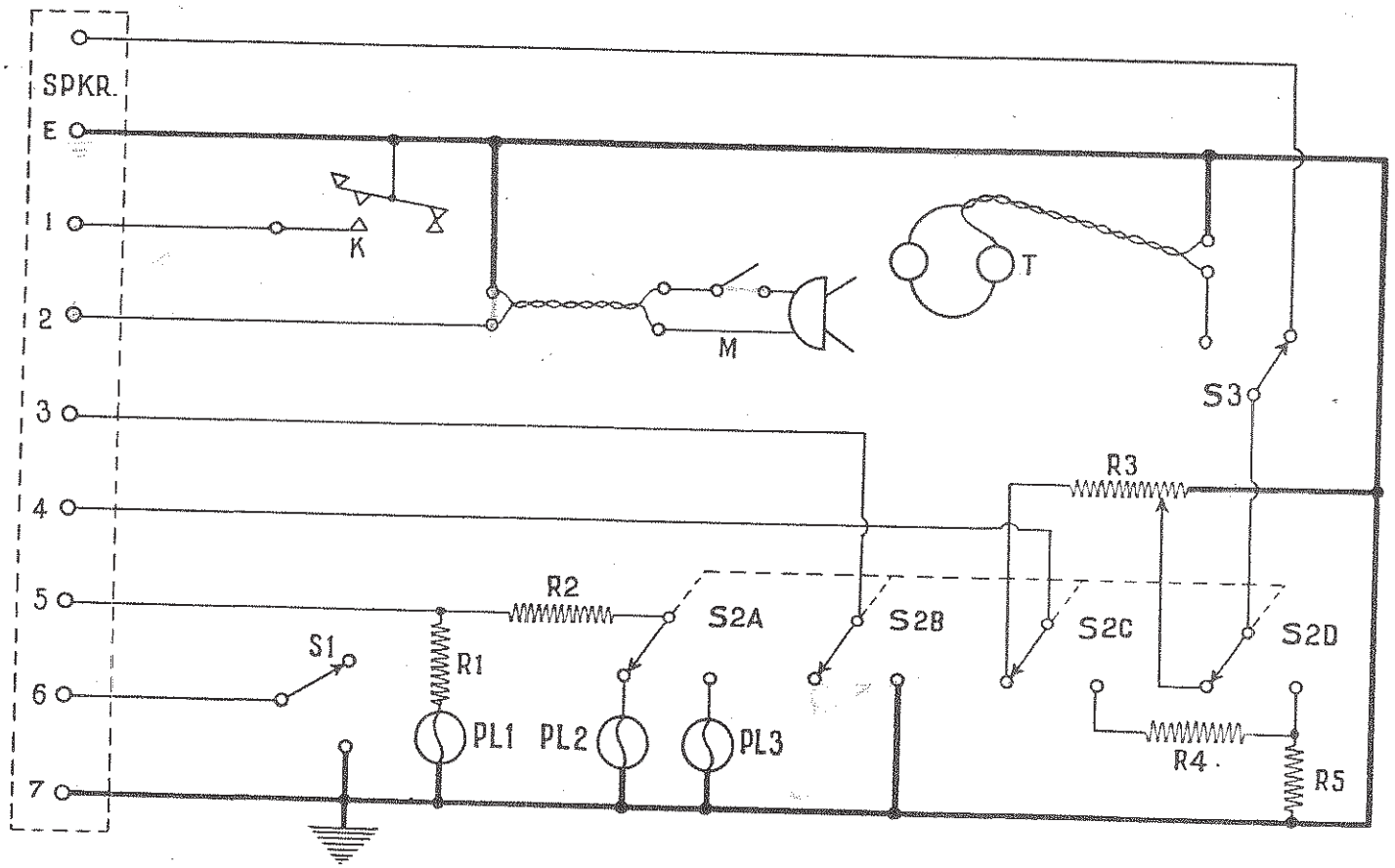

FIG. 5

SCHEMATIC REMOTE CONTROL UNIT TYPE RC 78A

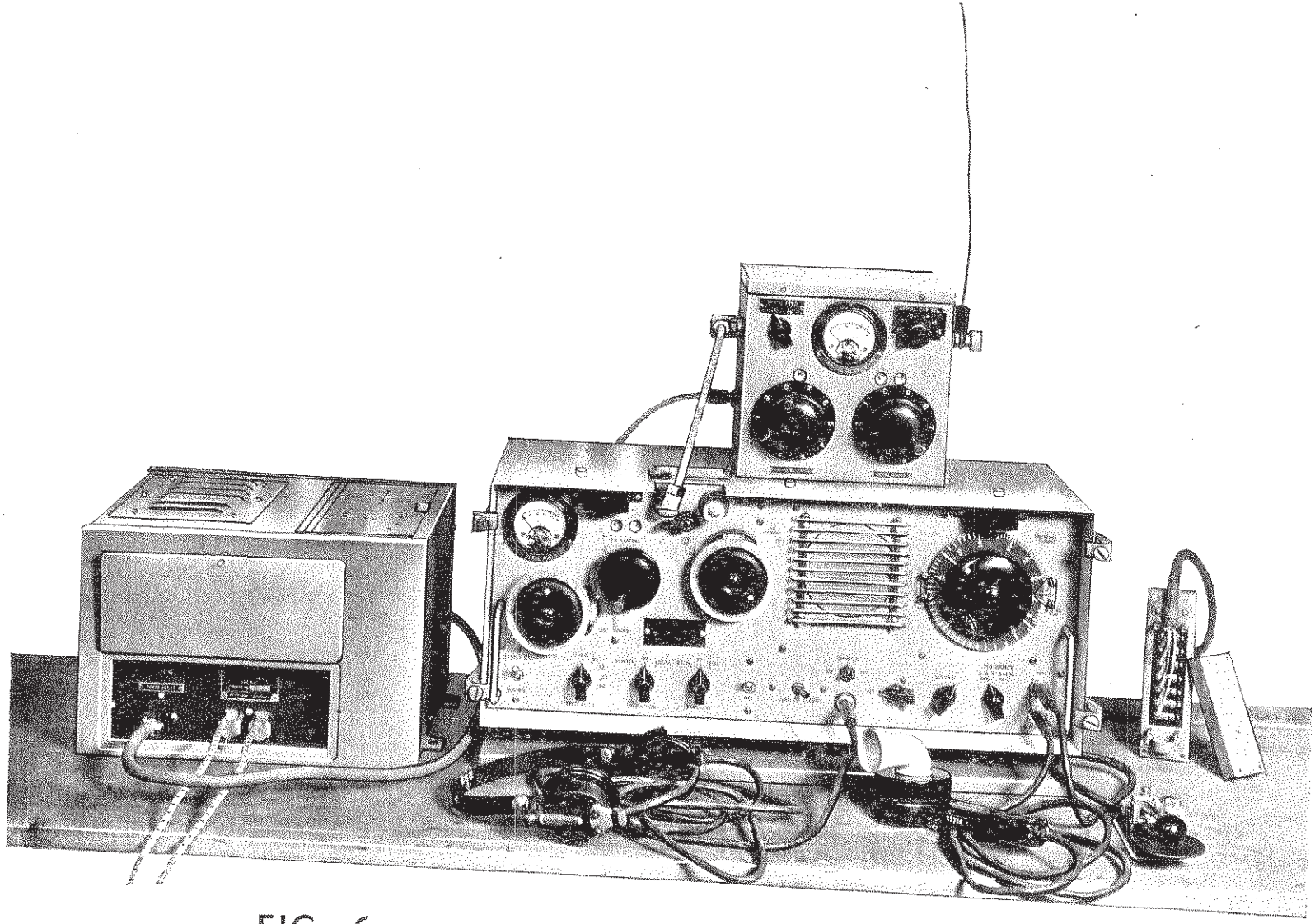

FIG. 6 R.C.8 EQUIPMENT — FRONT VIEW

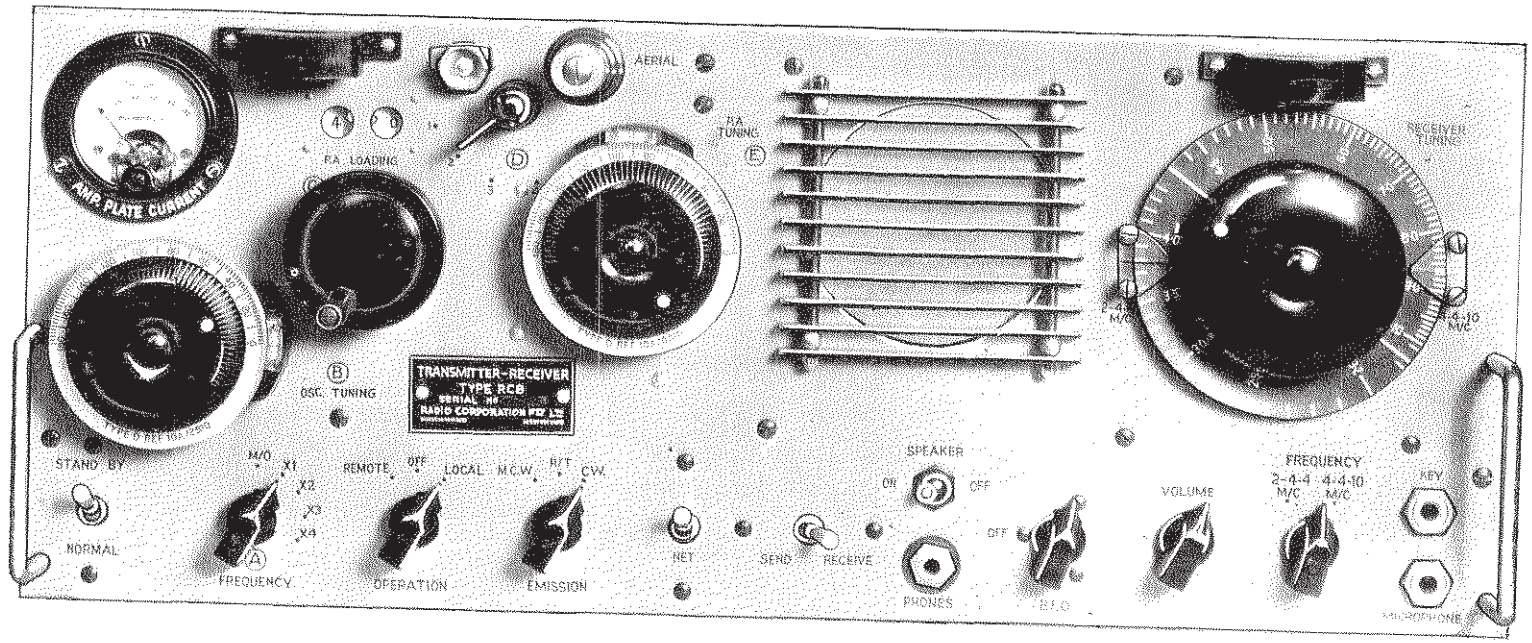

FIG. 7 TRANSMITTER RECEIVER, TYPE R.C.8 — FRONT PANEL

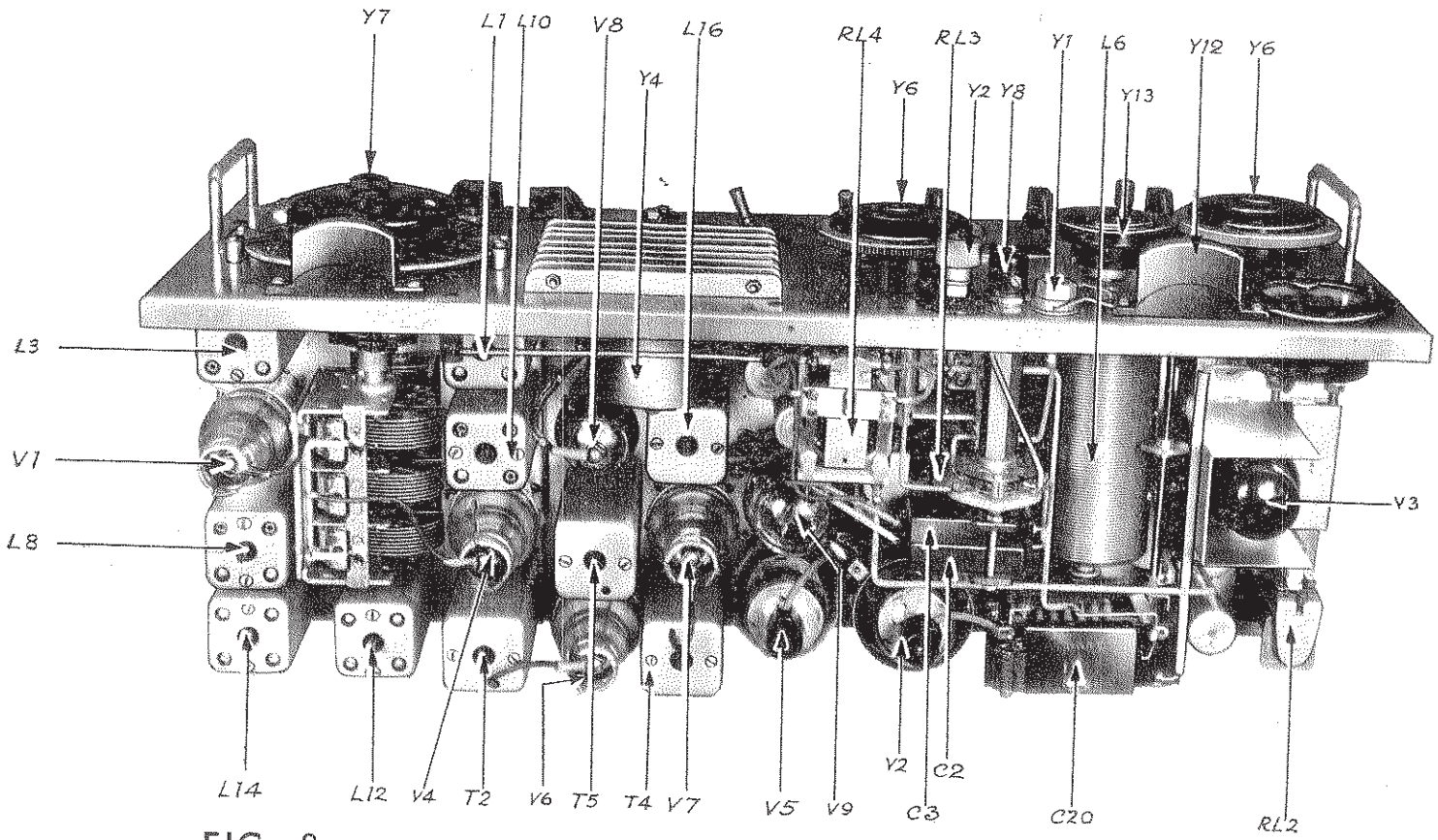

FIG. 8 TRANSMITTER RECEIVER TYPE R.C.8 — TOP FRONT VIEW

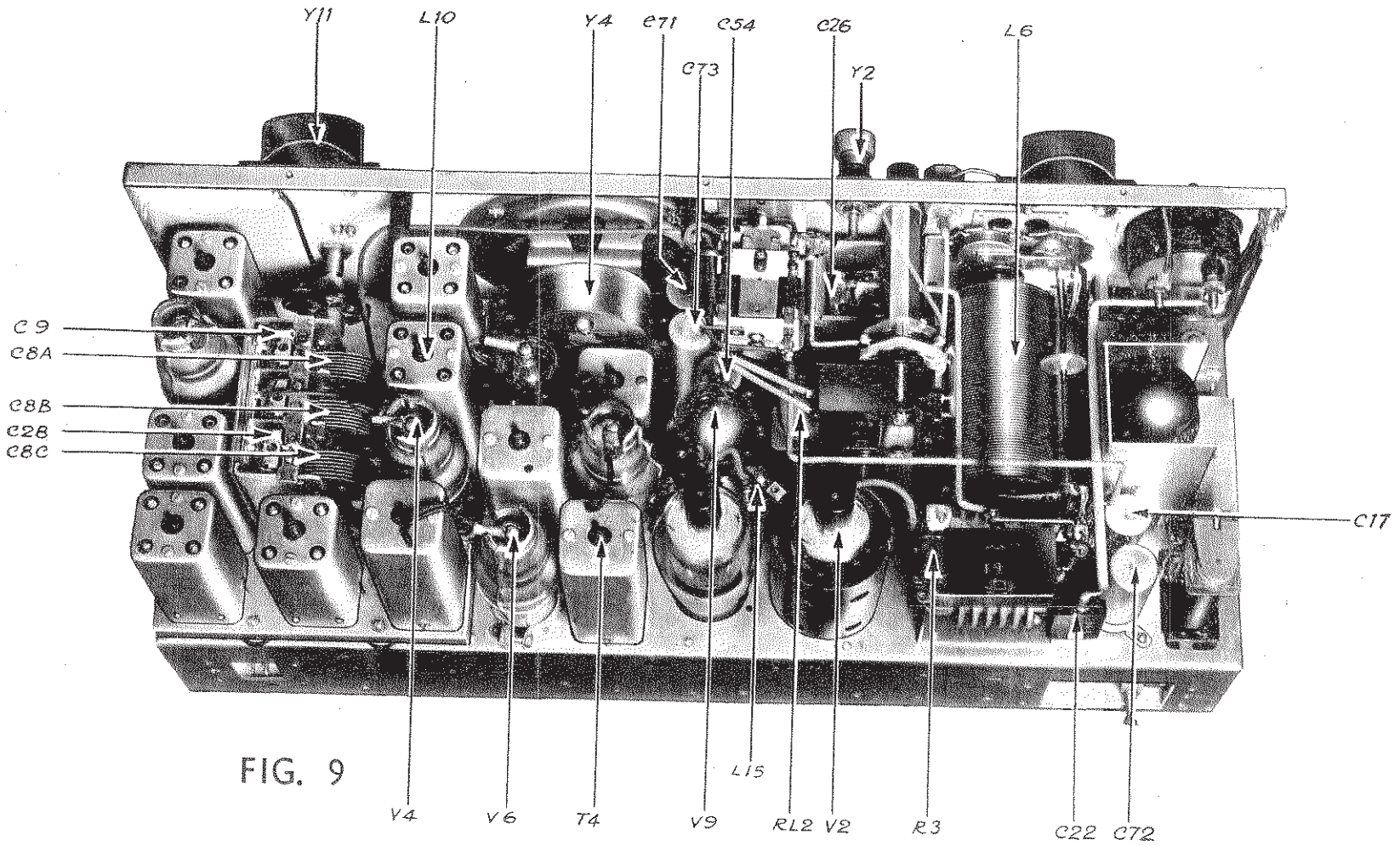

FIG. 9

TRANSMITTER RECEIVER TYPE R.C.8 — TOP BACK VIEW

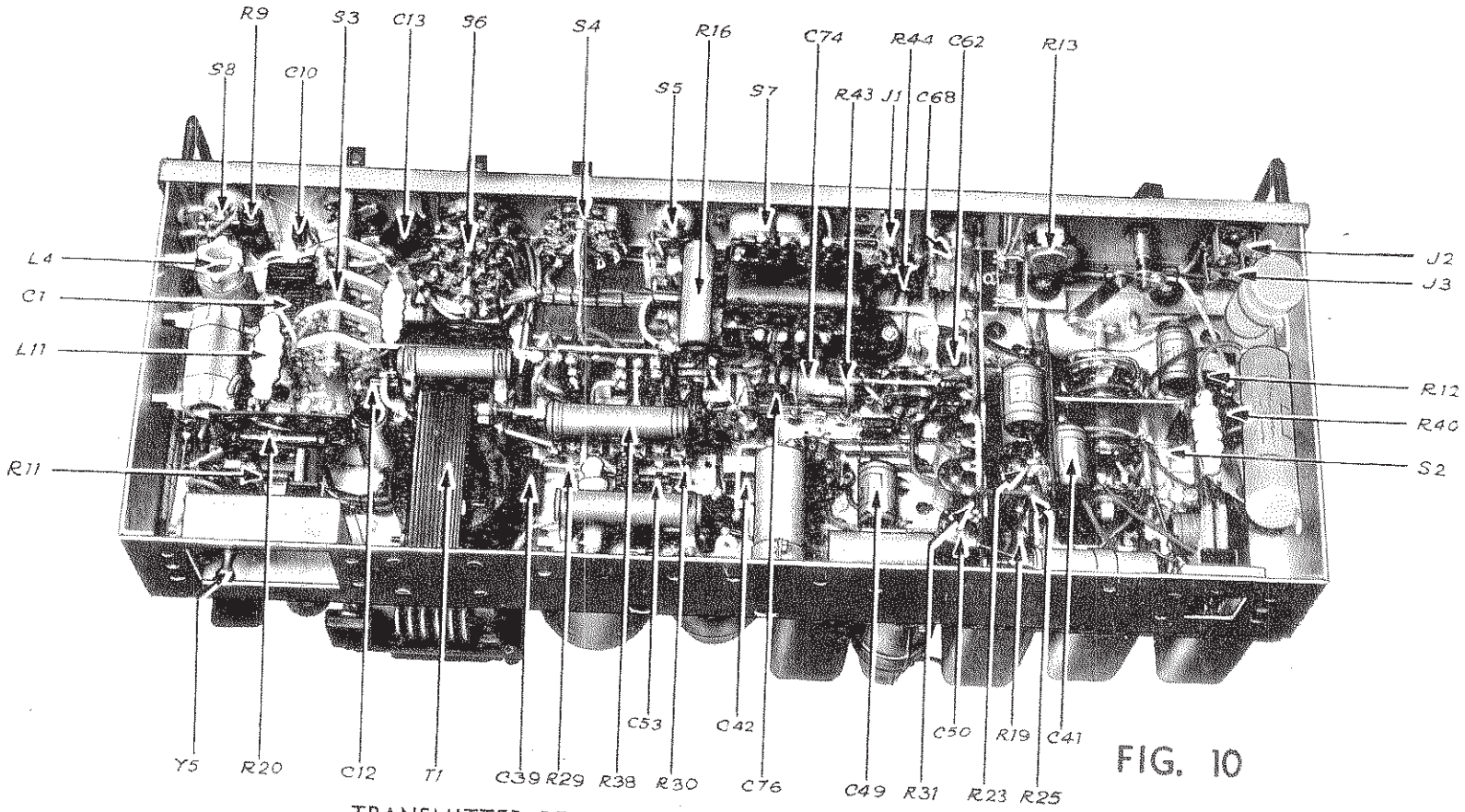

FIG. 10

TRANSMITTER RECEIVER TYPE R.C.8 — BOTTOM BACK VIEW

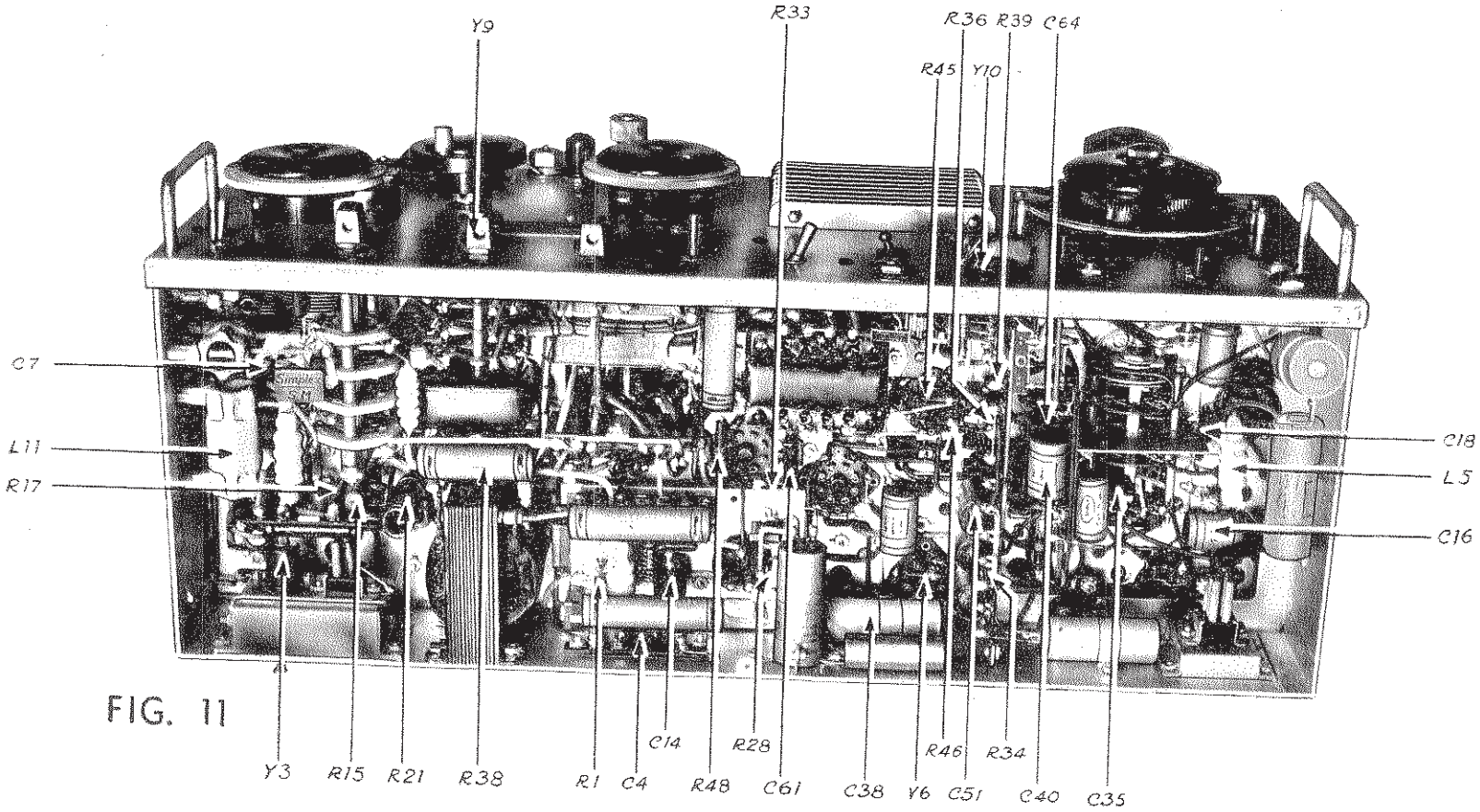

FIG. 11

TRANSMITTER RECEIVER TYPE R.C.8 — BOTTOM FRONT VIEW

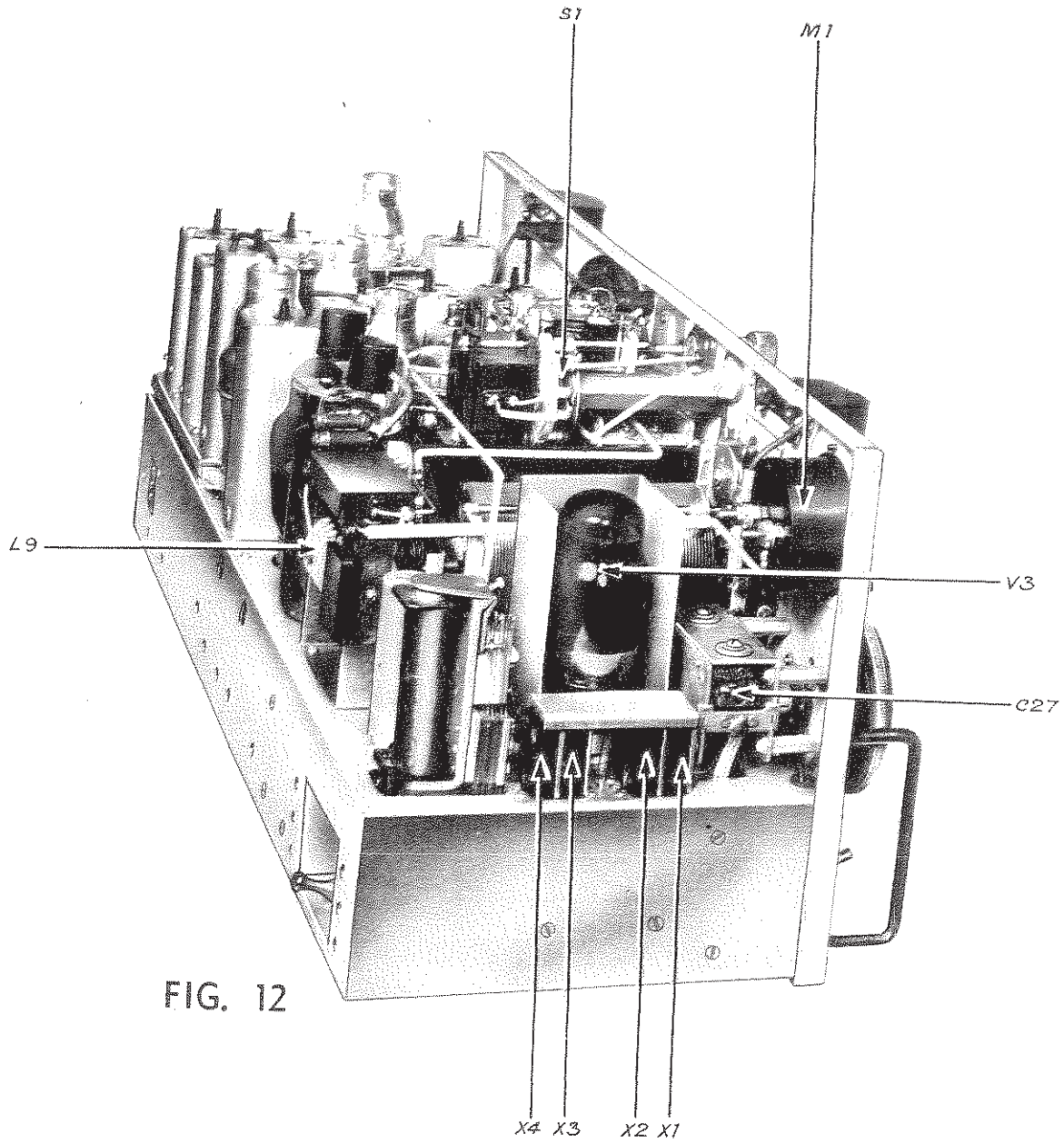

FIG. 12

TRANSMITTER RECEIVER TYPE R.C.8 — TOP END VIEW

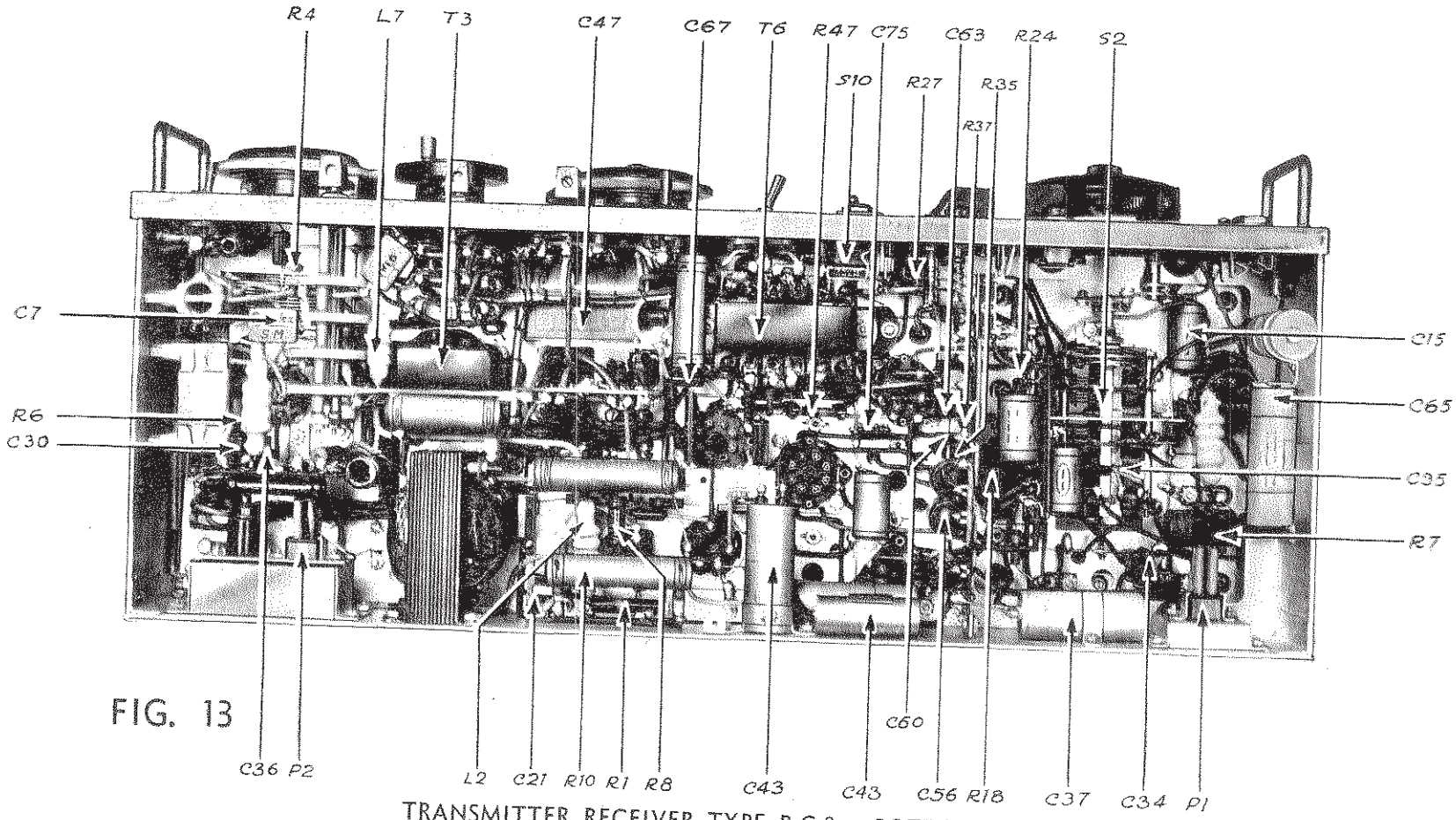

FIG. 13

TRANSMITTER RECEIVER TYPE R.C.8 — BOTTOM VIEW

FIG. 14

AERIAL FILTER UNIT, TYPE R.C.25 — FRONT VIEW

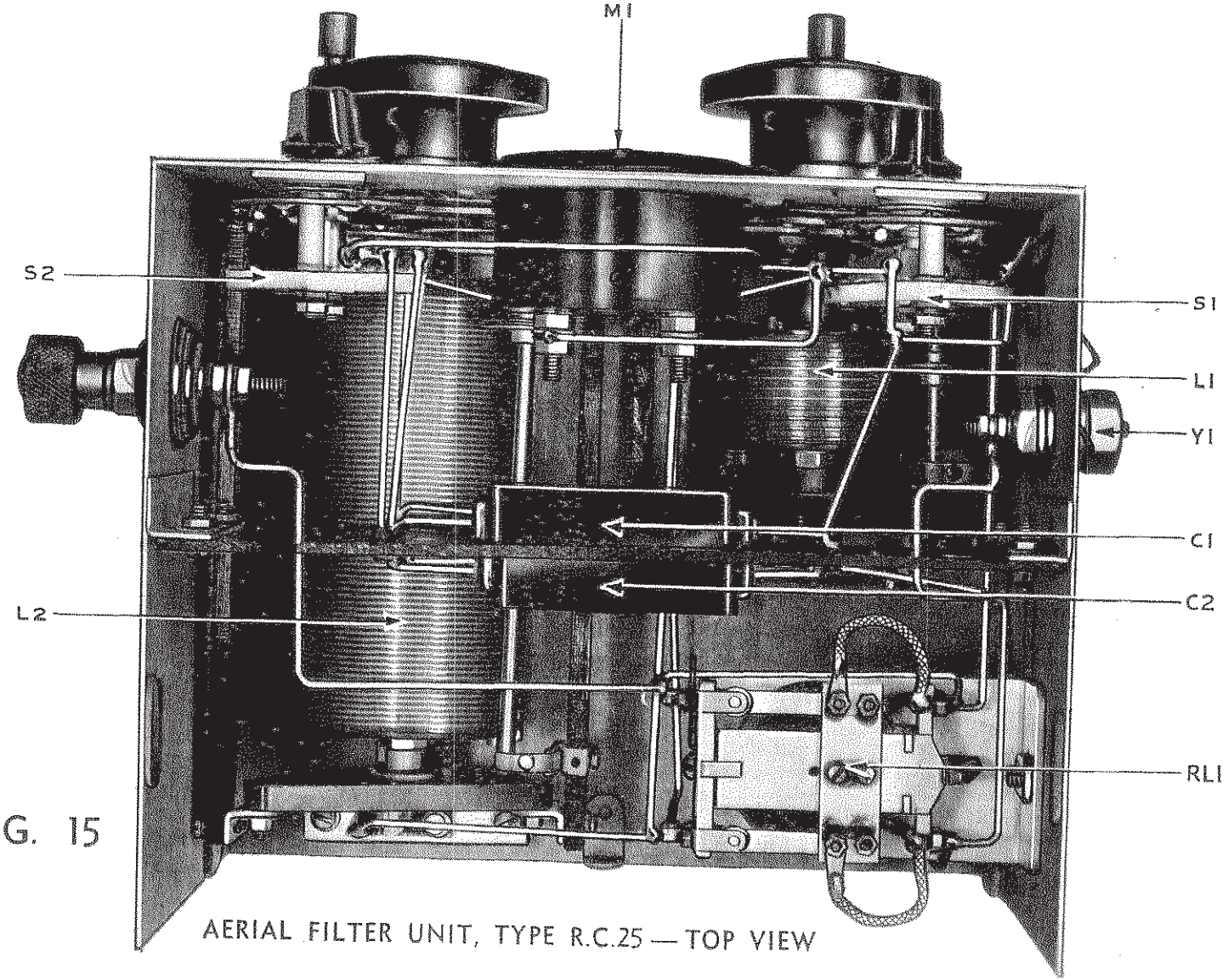

FIG. 15

AERIAL FILTER UNIT, TYPE R.C.25 — TOP VIEW

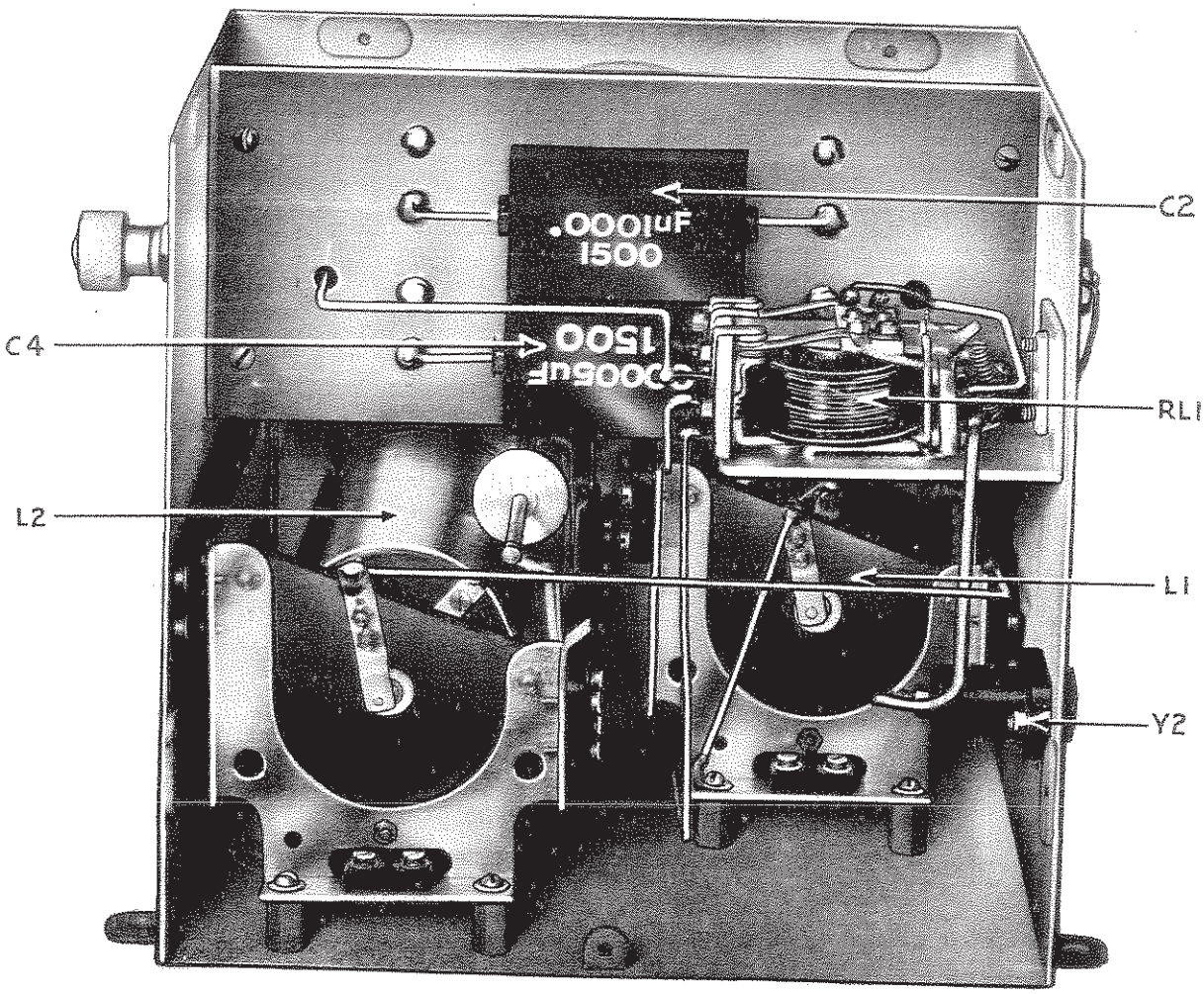

FIG. 16 AERIAL FILTER UNIT, TYPE R.C.25 — BACK VIEW

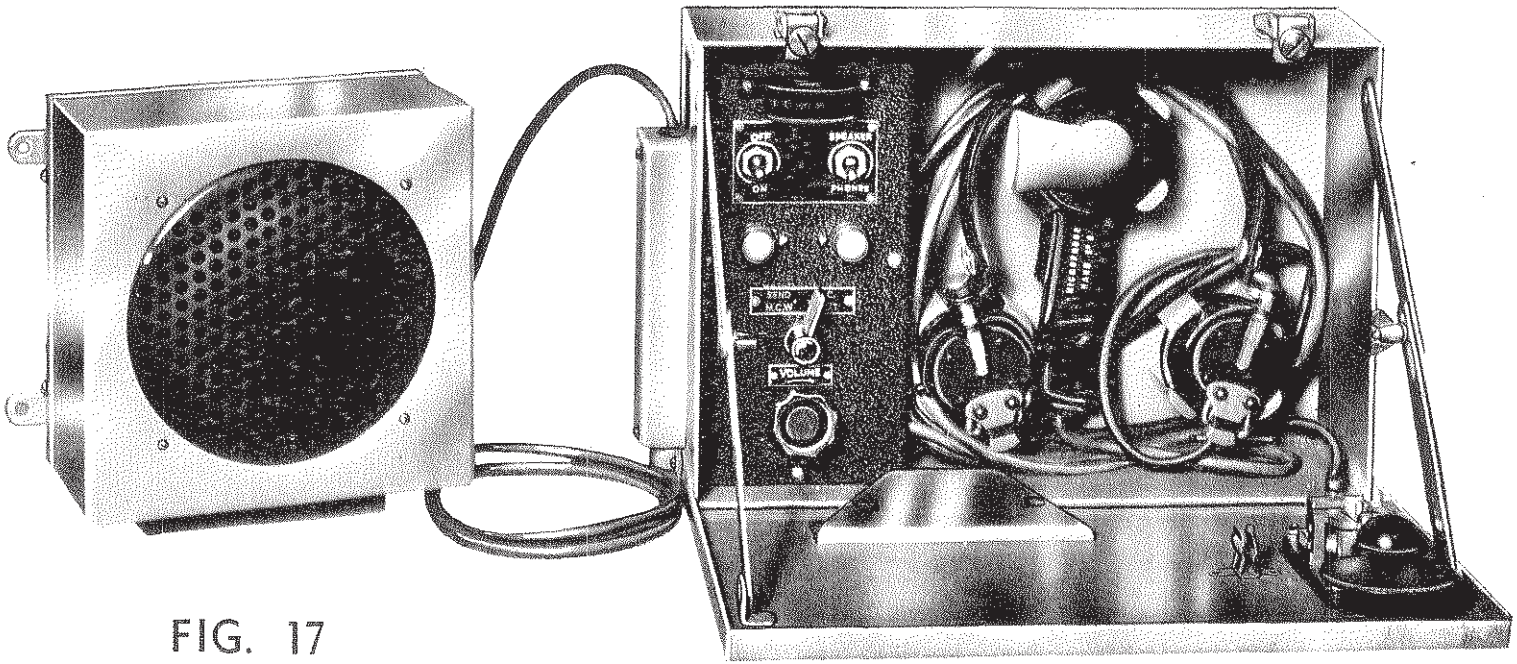

FIG. 17

REMOTE CONTROL UNIT, TYPE R.C.78A — FRONT VIEW

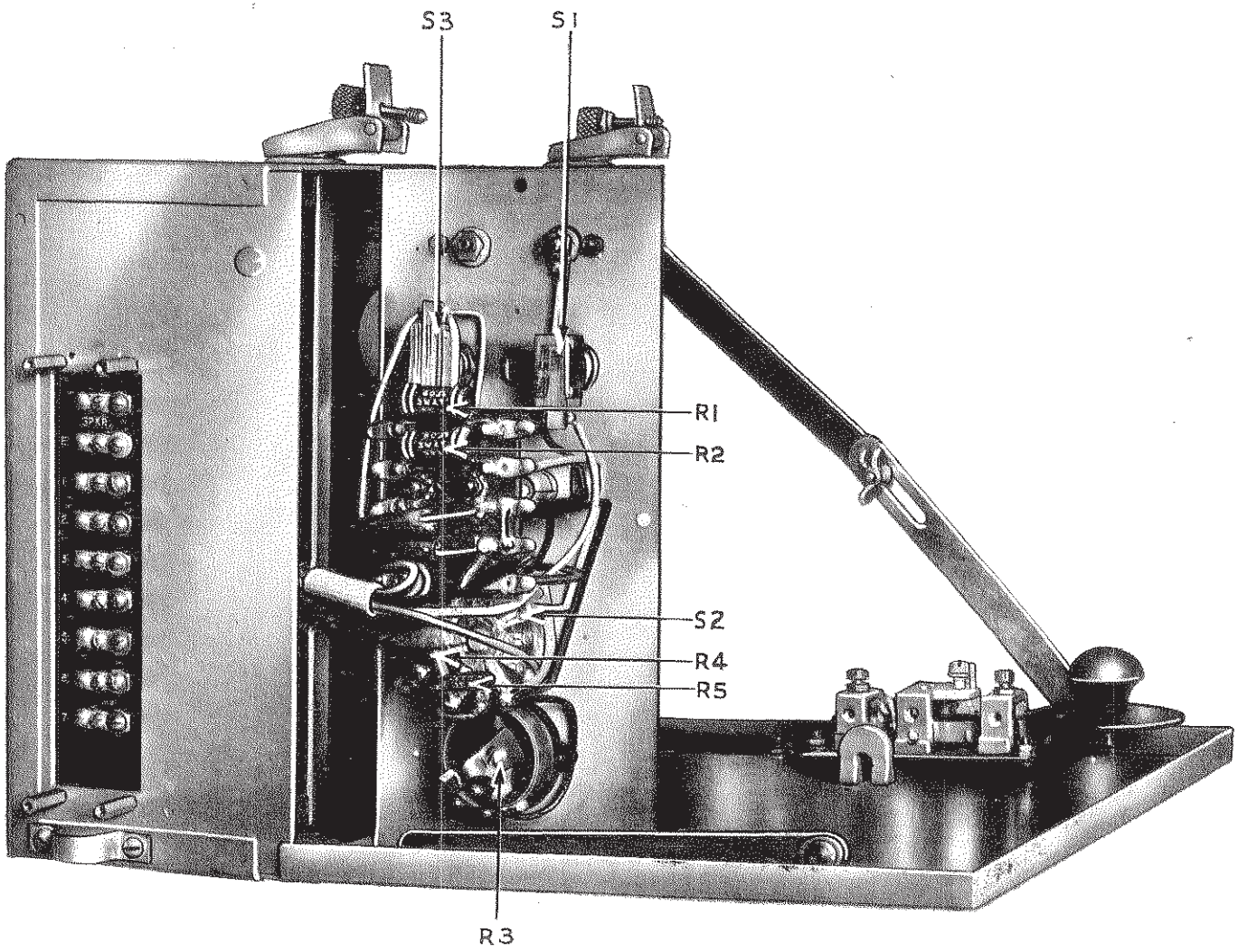

FIG. 18 REMOTE CONTROL UNIT, R.C.78A — VIEW OF WIRING

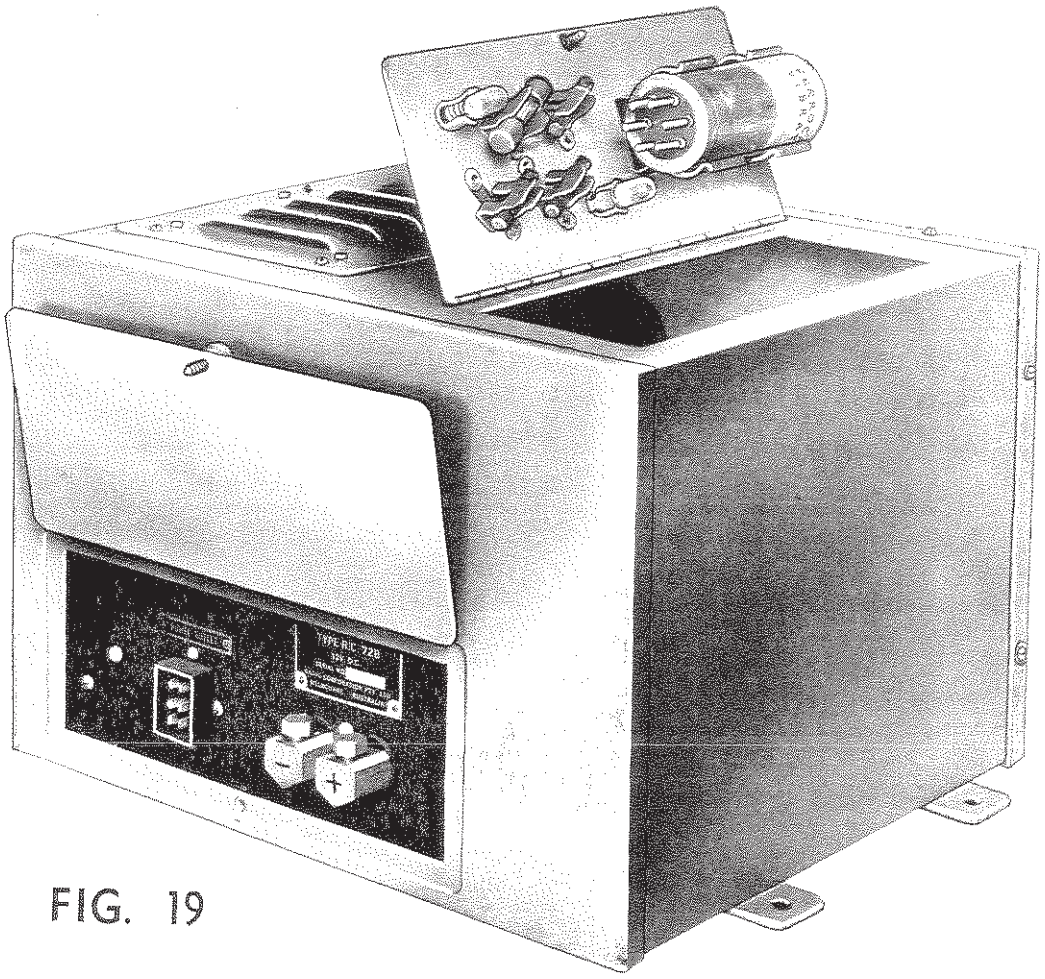

FIG. 19

POWER SUPPLY UNIT, TYPE R.C.72B — FRONT VIEW

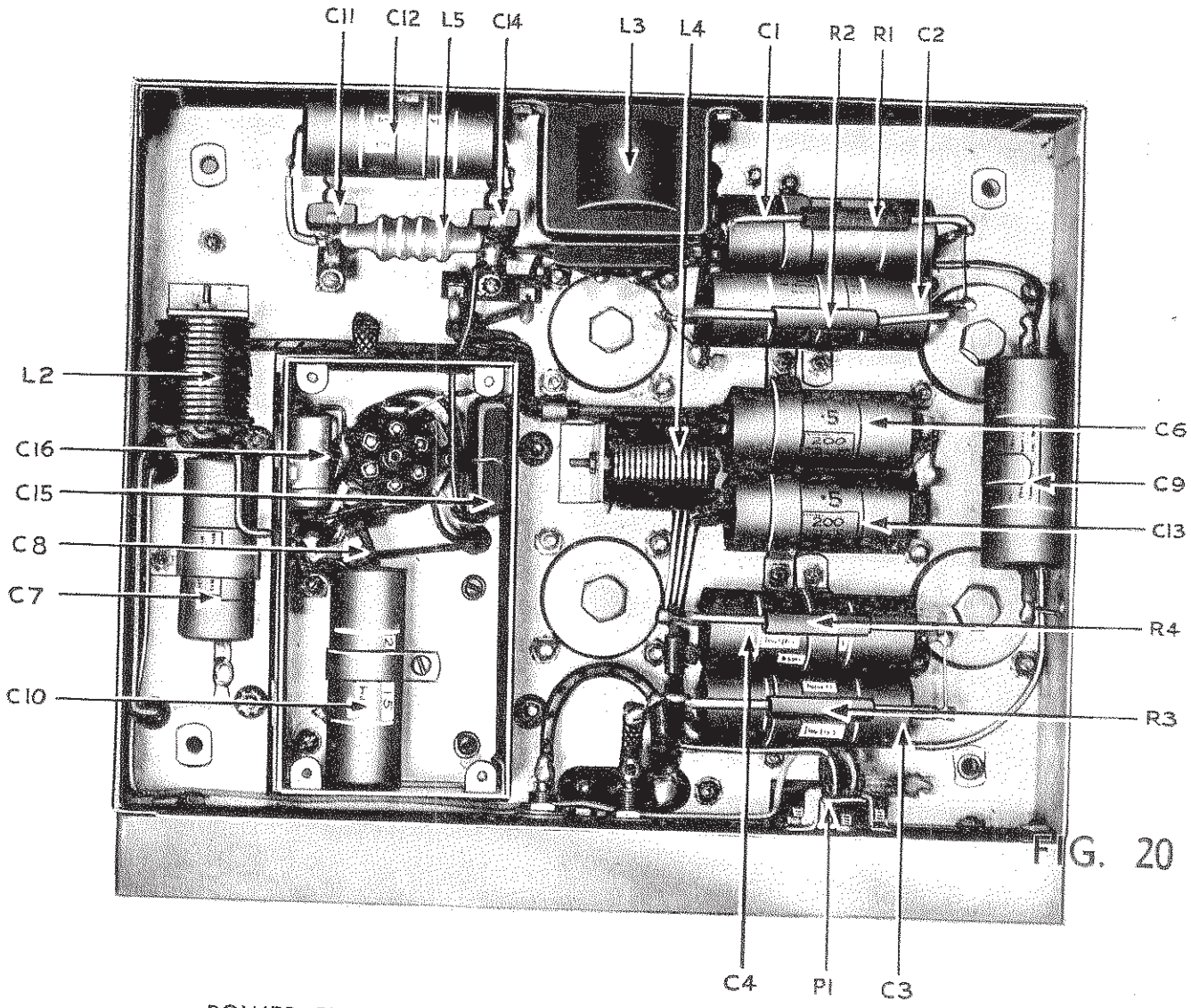

FIG. 20

POWER SUPPLY UNIT, TYPE R.C.72B — BOTTOM VIEW

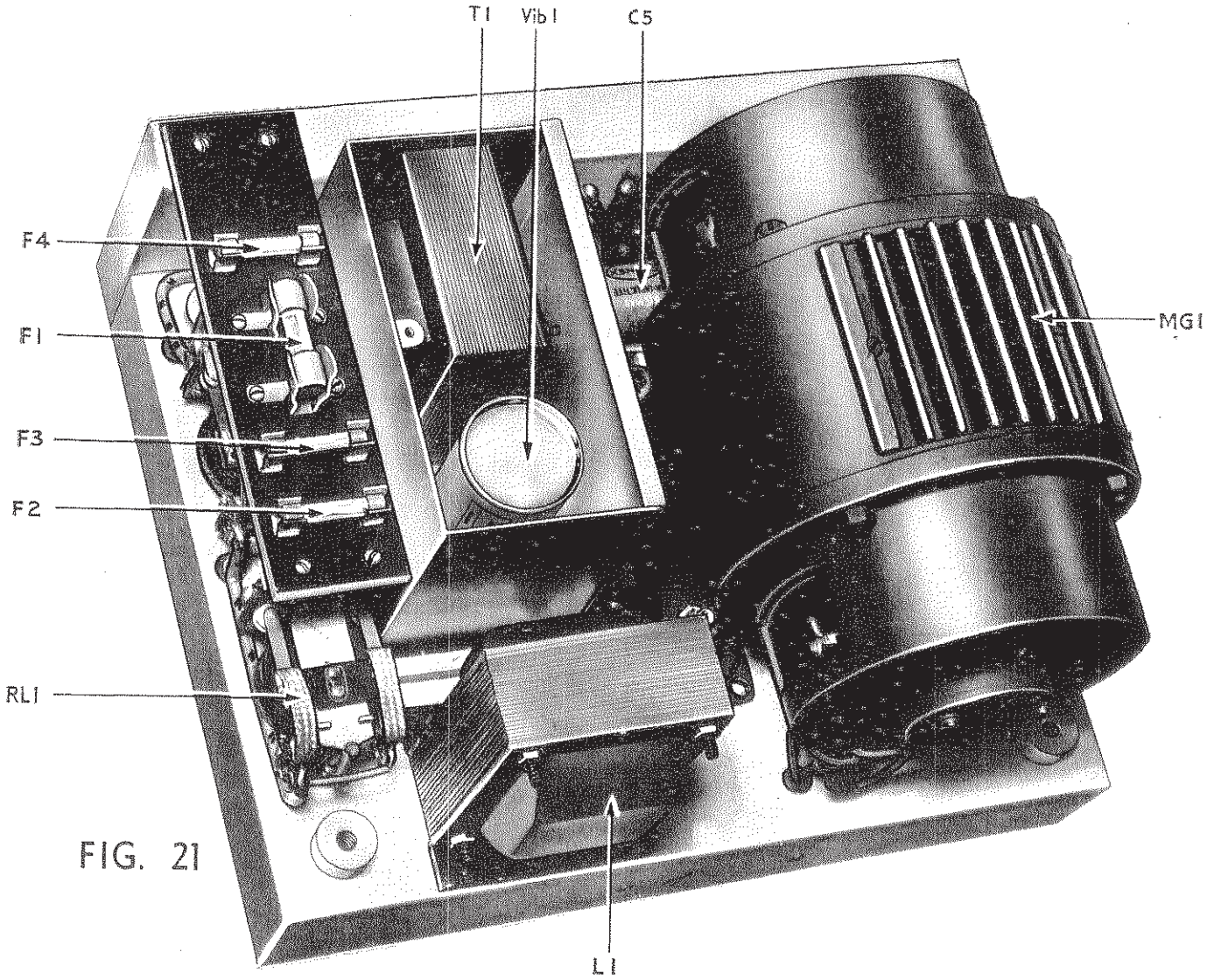

FIG. 21

POWER SUPPLY UNIT, TYPE R.C.72B — TOP VIEW

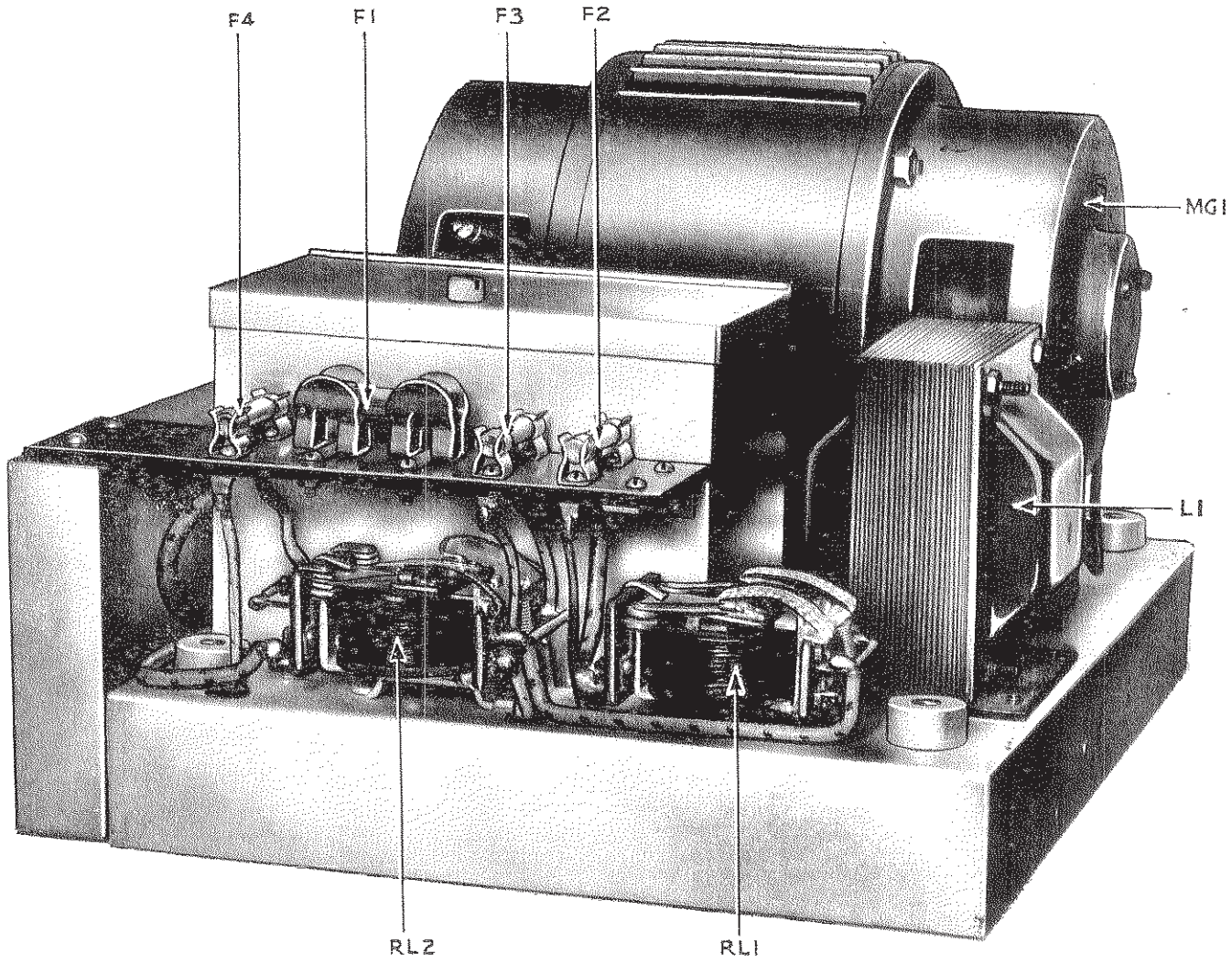

FIG. 22 POWER SUPPLY UNIT, TYPE R.C.72B — SIDE VIEW

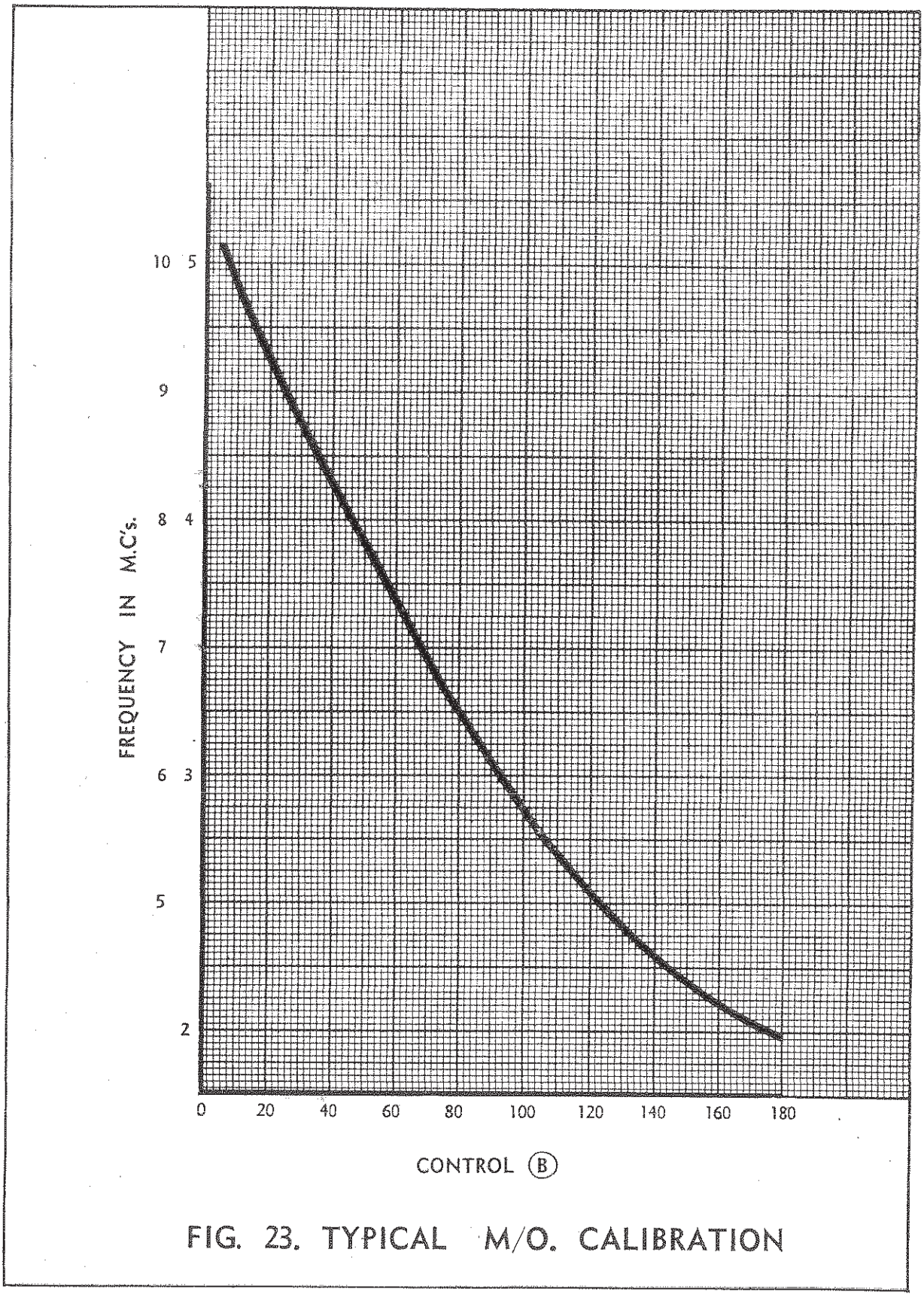

FIG. 23. TYPICAL M/O. CALIBRATION

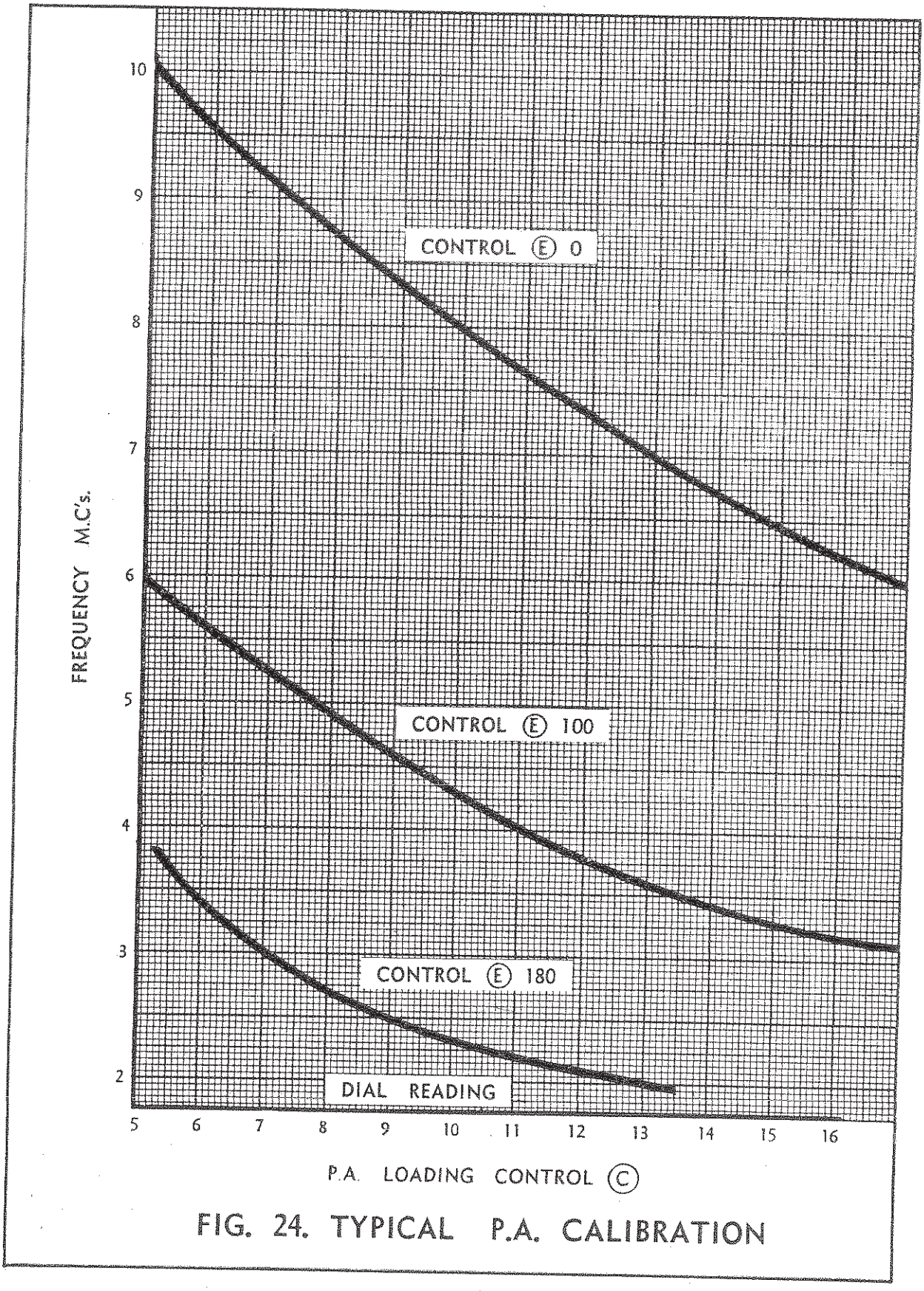

FIG. 24. TYPICAL P.A. CALIBRATION

Frequency	Transmitter-Receiver RC.8				Aerial Filter Unit RC.25					Remarks
	Osc. Tuning	P.A. Loading	Aerial Coupling	P.A. Tuning	Aerial Coupling	Aerial Feed	Aerial Capacity	Aerial Tuning	Aerial Current	
	64.5	8	1	180	3.4	1	5	8.3	.8	
	140	9	1	180	3.4	1	5	8.3	.9	
	93	0 8	1	150	3.8	1	5	0	.4	
	95	9	1	160	3.8	2	4	5.5	.4	
	94	9	1	160	3.8	1	5	8.4	.5	
	58	11	1	180						

TRANSMITTER TUNING ADJUSTMENTS.

Frequency	Transmitter-Receiver RC.8				Aerial Filter Unit RC.25					Remarks
	Osc. Tuning	P.A. Loading	Aerial Coupling	P.A. Tuning	Aerial Coupling	Aerial Feed	Aerial Capacity	Aerial Tuning	Aerial Current	
2715 Kcs.	110	1.4	1	1..	3.5	1.5		1.12	.6	
2410 Kcs.	128	2.5	1	100	3.8	2	5		.3	
67.5	72	1.9	1	0	3	2	5		.3	
8835	29	07	1	0	3.8	2	6	5.29		

NAVAL MESSAGE

nt, Govt. Printer.

Revised Dec., 1935
Reprinted Mar., 1945

	Codress/Plaindress	No. of Groups:
	FROM:	

			5
			10
			15
			20
			25
			30
			35
			40
			45
			50

Cypher	Time of Receipt	Time of Despatch	Operator	P.O.O.W.	Date

(2)