RESTRICTED

THE INFORMATION GIVEN IN THIS DOCUMENT IS NOT TO BE COMMUNICATED, EITHER DIRECTLY OR INDIRECTLY, TO THE PRESS OR TO ANY PERSON NOT AUTHORIZED TO RECEIVE IT.

AUSTRALIAN ARMY

REPAIR PARTS SCALE

22113
5820-66-049-7900
RADIO SET,
PRC-F3

22113

AUTHORISED FOR USE WITHIN THE AUSTRALIAN ARMY. BY COMMAND OF THE CHIEF OF THE GENERAL STAFF

(J.C. HUGHES)
MAJOR GENERAL
GENERAL OFFICER COMMANDING
LOGISTIC COMMAND

Prepared and issued by CONTROLLER, SUPPLY AGENCY HQ LOGISTIC COMMAND

AMENDMENT CERTIFICATE

1. Proposals for amendments or additions to the text of this publication are to be made in accordance with paragraphs 16 and 17 of the Preface.

2. It is certified that the amendments promulgated in the undermentioned amendment list have been made in this publication.

Amendments		Amended by (Printed name and initials)	Date of Amending
Number	Date		

DISTRIBUTION

RPS

Unit	Qty	Unit	Qty
1 MD		1 MD (CONT'D)	
HQ 1 FF GP	1	NQ WKSP COY	4
HQ 3 BRIGADE	2	CANUNGRA WKSP PL	2
HQ 6 BRIGADE	2	1 EME SVCS UNIT	2
BSQN 3 CAV REGT	2	5 TPT COY WKSP	1
4 CAV REGT	2	162 RECCE SQN WKSP	2
1 FD REGT	2	171 RECCE SQN WKSP	2
4 FD REGT	2	131 DIV LOC BTY WKSP	2
7 SIG REGT	2		
103 SIG SQN	2	2 MD	
1 RAR	2	HQ 2 DIV FF GP	1
2/4 RAR	2	HQ 2 MD	1
6 RAR	2	2 CAV REGT	2
8/9 RAR	3	HQ 2 SUP GP	1
3 FD SUP COY	1	21 SUP BN	5
6 FD SUP COY	2	101 FD WKSP	4
2AOD	1	1 FER WKSP	2
HQ 1 SUP GP	1	17 CONST SQN WKSP	2
11 SUP BN	4	HQ 2 EME GP	2
2 FD SUP BN	2	2 BASE WKSP BN	7
141 SUP COY	1	SYDNEY WKSP COY	2
HQ 1 DIV EME	1	SINGLETON WKSP	2
106 FD WKSP	4	2 EME SVC UNIT	2
102 FD WKSP	4	161 RECCE SQN WKSP	2
2/3 FER WKSP	3		
18 FD SQN WKSP	2	3 MD	
1 AVN REGT WKSP	2	126 SIG SQN	1
1 DIV TPT REGT WKSP	2	HQ 3 SUP GP	1
20 DIV ESS WKSP	2	31 SUP BN	3
173 GEN SPT SQN WKSP	2	32 SUP BN	5
HQ 1 EME GP	1	33 SUP BN	3
1 BASE WKSP BN	4	21 CONST SQN WKSP	2
5 BASE WKSP BN	2	HQ 3 EME GP	1

DISTRIBUTION

RPS

Unit	Qty	Unit	Qty
3 MD (CONT'D)		7 MD	
3 BASE WKSP BN	3	HQ 7 MD	2
4 BASE WKSP BN	3		
MEA	2	SPECIAL ISSUES	
MELB WKSP COY	2	ORD 3	1
PUCKA WKSP COY	2	SDC S1	1
3 EME SVCS UNIT	2	D COMMS	1
SCHOOL OF SIGS	2	INFO CENTRE MAT BR CANBERRA	1
4 MD			
HQ 4 MD	1		
10 RSAR	1		
41 SUP BN	3		
16 AD REGT WKSP	2		
ADELAIDE WKSP COY	4		
4 EME SVCS UNIT	4		
5 MD			
HQ 5 MD	1		
152 SIG SQN	1		
SAS REGT	2		
51 SUP BN	4		
22 CONST SQN WKSP	2		
PERTH WKSP COY	2		
5 EME SVCS UNIT	2		
6 MD			
HQ 6 MD	1		
611 SUP COY	1		
HOBART WKSP PL	2		

CONTENTS

	Page
Title Page	I
Amendment Certificate	II
Distribution	III
Contents	IV
RPS Numbering System	V
Important Note	VI
Preface	VII
Sample Scales Change Request	IX

CHAPTER 1 - INDEXES

Section

1. Numerical Index — Serial Number Sequence
2. Numerical Index — DSN Sequence
3. Group Index

CHAPTER 2 — TEXT

4. Repair Parts Scale — Text

REPAIR PARTS SCALES DOCUMENT NUMBERING SYSTEM

1. Repair Parts Scales (RPS) are identified by a five digit number. The first two digits of that number indicate the equipment grouping as follows :

A Vehicles	01
B Vehicles	02
C Vehicles	03
Armament	04
Small Arms	05
Watercraft	06
Instruments	07
Machinery	08
Refrigeration	09
Bridging	10
Construction	11
Eng B	12
Eng C	13
Eng D	14
Eng E	15
Eng F	16
Eng G	17
Air Conditioning	18
Test Equipment	19
Radar, Sonar and Sound Range	20
Radiac	21
Radio	22
Electronic	23
Line and Telegraph	24

IT IS IMPORTANT THAT YOU
READ THE PREFACE BEFORE USING THIS DOCUMENT

PREFACE

Purpose of Repair Parts Scale

1. This Repair Parts Scale (RPS) is an entitlement document raised by the Supply Documentation Centre (Scales) to authorise units, LADs and Workshops that have the trade qualified personnel and facilities to draw those repair parts to which they are entitled, for the repair and maintenance of the Defence Inventory of equipment.

Basis of Scale

2. The RPS is assessed on the premise that a maintainable item is any essential repair part or accessory which, through deterioration, breakage, normal wear and tear or loss is likely to require replacement during the expected life of the equipment, and is an item which could not be economically repaired or fabricated in Workshops.

Stocking Quantities

3. Stocking quantities are not shown in this RPS but are available on request from :

Supply Agency
SDC(S)
PO Box 1932R
GPO Melbourne 3001.

4. The following information is required with each stocking quantity request :

a. Number of equipments supported.
b. Duration of support.
c. Repair level.

How to use RPS

5. Refer to the Group Index page at Chapter 1 of the RPS to locate the group letter(s) and page number of the group required.

6. Refer to the Group Illustration and identify the item required by its illustration number.

7. Refer the illustration number to the group and item number column (column 2) to obtain the designation, manufacturers' detail, number off per assembly, expendability and level of repair details.

8. The Defence Stock Number (DSN) is obtained by noting the Serial Number (column 1) of the item required and referring it to the Serial Number Sequence Index in Chapter 1 of the RPS.

9. If the DSN of an item is known, refer to the DSN Sequence Index to find the Serial Number of the item. Serial numbers of items run consecutively throughout the RPS.

Illustrated and Non-Illustrated Items

10. Against each maintainable item is shown :

a. A group item number consisting of a letter(s) and number which identifies the component shown on the illustrated plate.
eg: AB 007 - indicates item number 7 (seven) on illustration group AB.

b. Unillustrated items have the identifying item number shown as 000.
eg: AB 000 - indicates that the item is not illustrated and only shown in the text of the group AB.

SI 46
Formerly AAF F132
Revised Apr 80

Department of Defence

SCALES CHANGE REQUEST – ARMY

To: Supply Agency (SDC), HQ Logistic Command

From:

Unit Title and Address	Unit Reference Number ▷	
	Repair Parts Scale Number ▷	
	Issue Number ▷	

ITEMS AFFECTED

Serial No	DSN	Designation	*Repair Level

CHANGE RECOMMENDED AND REASON FOR CHANGE

ORIGINATING OFFICER

..... (Signature) ..... (Printed Name) ..... (Rank) ..... (Appointment) ..... (Telephone No) ..... (Date)

SDC USE ONLY

Referred to S..... ..... (Date) ..... (Signature)

DISTRIBUTION:
1. PP&A
2. PP&A *(Unit Advice Copy)*
3. Assessing Section *(PP&A Advice Copy)*
4. Originator's Watch Copy

Sup Div (SDC)

* *Unit = U*
Field = F
Base = B

CHAPTER 1

SECTION 1

NUMERICAL INDEX

SERIAL NUMBER SEQUENCE

SERIAL No.	DSN
000019	5985-66-067-7090
000020	5820-66-067-7091
000021	9905-66-067-7296
000022	9905-66-067-7296
000023	4020-66-014-4840
000024	5935-99-117-0007
000025	6145-66-090-1643
000047	5985-66-031-8440
000048	5985-66-031-8441
000049	5985-66-031-8442
000050	5985-66-031-8443
000051	5985-66-031-8444
000052	5985-66-031-8445
000053	5985-66-031-8446
000054	5985-66-034-9442
000056	4020-66-014-4840
000059	4020-66-086-8740
000083	5330-66-031-5635
000092	5310-66-031-5633
000095	5360-66-031-5625
000097	5820-66-090-1850
000098	5999-66-090-1855
000099	5330-66-031-5634
000100	5820-66-090-1853
000101	5310-66-090-1951
000102	5310-66-090-1952
000103	5820-66-090-1842
000104	4730-66-031-5632
000105	9905-66-016-3531
000106	5999-66-090-1854
000107	5330-66-090-1953
000108	5820-66-090-1869
000116	5310-66-090-1955
000117	5310-66-090-1954
000139	5820-66-090-1856
000140	5306-66-090-1956
000141	5330-66-031-5634
000142	5330-66-031-5626
000143	5820-66-089-5736
000145	5310-66-031-5627
000146	5310-00-205-8932
000147	5355-66-031-8458
000148	5305-66-031-5629
000149	3040-66-086-8739
000152	5330-66-025-2669
000153	5365-66-031-5623
000175	5305-66-031-5699
000176	5310-00-543-5060
000177	3020-66-031-8456
000178	5940-66-018-7314
000179	5365-66-090-1706
000180	5310-66-031-5896
000181	5999-66-031-8453
000182	5985-66-031-8457
000183	5360-66-031-5631
000184	5999-66-090-1857
000185	5950-66-031-8454
000187	4020-66-089-5347
000188	5985-66-031-8455
000189	5985-66-090-1858
000193	5310-66-086-8015
000194	5930-66-051-7009
000195	5305-66-047-0214
000196	5310-66-031-5622
000197	5310-66-014-1501

SERIAL No.	DSN
000220	5330-66-102-1571
000221	5340-00-056-2523
000222	5305-66-033-3624
000223	5310-66-016-2425
000226	5310-00-337-8329
000227	5325-00-505-4798
000233	5340-66-049-7774
000234	5320-00-117-6939
000235	5305-66-034-7852
000238	5340-66-031-5616
000239	5320-66-031-5617
000248	5820-66-032-3840
000256	5365-66-032-6276
000257	5330-66-018-8705
000258	5365-00-200-6707
000264	8305-66-026-7820
000265	8135-66-089-5345
000266	8040-66-021-2410
000267	8040-66-089-5343
000290	5965-66-031-8460
000292	5930-00-729-8291
000293	5930-66-031-8463
000294	5970-66-020-3308
000295	5930-66-031-8462
000296	9905-66-016-3531
000297	5965-99-901-1184
000298	5330-66-031-7986
000300	5305-66-031-5695
000301	5965-66-031-8461
000302	5305-66-031-5693
000303	5340-66-026-0780
000304	5305-66-031-5688
000305	5310-99-971-3720
000306	5935-66-054-1176
000307	5935-66-054-1175
000309	5330-66-013-5786
000310	5935-00-892-9817
000311	5330-66-031-7988
000312	5310-66-031-8464
000313	5820-66-031-8467
000314	5995-66-028-9541
000320	5340-66-031-5636
000342	5805-66-031-3881
000343	5355-66-031-3883
000344	5310-66-086-8018
000345	5310-66-013-0087
000346	5310-66-086-8016
000347	5305-66-086-8019
000348	5330-66-031-3885
000349	5330-66-031-3882
000350	5330-66-031-4100
000351	5310-66-031-4110
000352	5999-66-031-3880
000353	5360-66-031-4101
000354	5310-66-067-7242
000356	5805-66-031-3884
000358	5305-66-031-5698
000359	5310-99-943-6075
000360	5805-66-032-0502
000361	5305-66-086-8020
000363	5310-66-086-8017
000364	5305-66-012-6189
000365	5935-00-892-9817
000366	5995-66-032-0501
000368	5940-66-018-7314

SERIAL No.	DSN
000390	5995-66-032-6278
000391	5935-00-892-9817
000392	5965-99-901-1184
000393	5305-66-031-5624
000394	5305-66-067-7239
000395	5930-66-054-6929
000397	5360-66-048-8244
000398	5340-66-048-8243
000399	5965-99-940-2368
000400	5310-66-013-0062
000401	5330-66-056-1779
000402	5965-66-056-1758
000403	5999-66-056-1250
000425	5820-66-060-4307
000426	5305-66-031-5638
000428	5820-66-040-7290
000429	5820-66-040-7281
000430	4440-99-014-2497
000431	5820-66-027-1429
000432	5305-66-031-5680
000433	5310-99-943-6079
000434	5820-66-060-1623
000435	5820-66-060-1624
000436	5820-66-026-6275
000437	5820-66-040-7284
000438	5820-66-027-1428
000439	5820-66-026-3316
000440	5820-66-026-3315
000441	5820-66-026-3314
000442	5820-66-026-3313
000443	5935-66-032-1760
000444	5820-66-026-3312
000445	5820-66-026-3311
000446	5820-66-060-1622
000448	5820-66-032-0509
000449	5330-00-187-3614
000451	4020-66-014-4840
000452	5305-66-086-8021
000453	5310-99-944-5616
000454	5305-66-031-5699
000455	5310-99-943-6075
000478	5305-66-063-2705
000479	5310-99-971-3720
000480	5310-66-031-5895
000481	6135-66-060-4316
000482	5305-66-031-5713
000483	5310-66-014-1501
000484	5310-66-031-5896
000485	5940-66-060-4308
000486	5940-66-018-4333
000487	5940-66-060-4310
000488	5999-66-060-4309
000490	5330-66-017-2150
000491	5940-66-060-4311
000492	5970-66-060-4313
000493	5999-66-060-4312
000494	5330-66-056-1217
000495	5940-66-041-6207
000496	5310-66-031-5893
000497	5310-66-086-8018
000498	5310-99-946-9795
000499	5310-66-031-5899
000500	5330-66-063-2706
000501	5340-00-205-5159
000502	5320-00-256-1953

SERIAL No.	DSN
000503	5820-66-032-0503
000525	5905-00-240-7958
000526	5905-00-490-0246
000527	5905-00-413-1029
000528	5935-66-031-8459
000529	5905-99-013-5938
000530	5905-00-438-0505
000531	5905-00-491-2638
000532	5905-00-450-2827
000533	5905-00-240-2728
000534	5905-00-240-2736
000535	5905-00-422-5186
000536	5905-01-009-0175
000537	5905-00-458-9263
000538	5905-00-240-7982
000539	5905-00-240-7980
000540	5905-00-419-3949
000541	5905-00-240-2734
000542	5905-00-437-6298
000543	5905-00-240-2749
000544	5905-00-240-7950
000545	5950-66-032-0714
000546	5935-99-108-3668
000547	5905-00-240-7954
000548	5905-00-150-5256
000549	5905-00-240-2746
000550	5905-00-240-2726
000551	5905-00-240-2747
000552	5905-00-240-7979
000553	5950-66-032-0712
000554	5905-00-184-7705
000555	5905-00-249-1286
000556	5910-00-935-3511
000557	5910-00-952-9006
000558	5910-66-090-1378
000559	5961-00-051-5975
000560	5999-66-031-4291
000561	5961-00-988-1912
000562	5961-66-031-7817
000563	5910-66-100-5994
000564	5910-66-100-5931
000565	5950-66-032-1789
000566	5910-66-100-5982
000567	5961-00-911-6185
000568	5961-00-490-0151
000569	5950-66-082-6343
000591	5961-00-911-6185
000592	5999-66-031-4291
000593	5905-00-458-9263
000594	5910-00-450-8641
000595	5910-00-495-0042
000596	5905-00-450-8530
000597	5961-00-925-3777
000598	5905-00-240-2746
000599	5935-66-031-8459
000600	5905-00-437-6298
000601	5905-00-240-2736
000602	5905-00-436-8557
000603	5910-66-100-8045
000604	5910-00-113-9817
000605	5905-00-240-7954
000606	5905-01-009-0175
000607	5950-66-032-3833
000608	5961-00-051-5975
000609	5905-01-050-4106

SERIAL No.	DSN
000610	5910-00-450-8641
000611	5910-00-010-8422
000612	5905-00-240-7980
000613	5935-66-031-7818
000614	5905-00-240-2728
000615	5905-00-240-2734
000616	5910-00-010-8159
000617	5910-66-090-1084
000618	5905-00-490-0246
000619	5905-00-437-6300
000620	5910-00-926-9784
000621	5935-99-108-3668
000622	5905-00-240-7947
000623	5905-00-184-7705
000624	5961-99-037-2903
000625	5905-00-400-9612
000626	5905-00-240-2745
000648	5910-00-952-9006
000649	5961-00-051-5975
000650	5999-66-031-4291
000651	5905-00-184-7705
000652	5905-00-419-3949
000653	5935-66-031-7818
000654	5905-00-438-0505
000655	5905-00-437-6298
000656	5910-00-935-3511
000657	5905-00-240-2736
000658	5905-00-233-6815
000659	5905-00-240-7954
000660	5910-00-450-8641
000661	5905-00-240-2748
000662	5905-00-150-5256
000663	5961-00-490-0151
000664	5910-00-010-8422
000665	5935-99-108-3668
000666	5910-00-010-8159
000667	5905-00-240-7979
000668	5905-00-240-2728
000669	5905-00-422-5186
000670	5961-00-911-6185
000671	5961-99-037-2903
000672	5905-01-050-4106
000673	5910-14-318-1531
000674	5905-00-419-0189
000675	5905-00-249-1286
000676	5910-00-029-4852
000677	5961-00-853-2601
000678	5905-00-458-9263
000679	5905-66-030-3597
000680	5935-66-031-8459
000681	5905-00-240-2746
000682	5905-00-491-2638
000683	5905-00-240-2726
000684	5910-66-090-1084
000685	5910-00-926-9784
000686	5905-00-400-9612
000687	5999-66-031-4291
000710	5905-99-013-6239
000711	5910-00-450-8641
000712	5910-00-010-8159
000713	5905-00-450-8530
000714	5905-00-240-7982
000715	5961-00-988-1912
000716	5999-66-031-4291
000717	5961-66-032-1336

SERIAL No.	DSN
000718	5905-00-240-7980
000719	5905-00-717-6590
000720	5910-17-037-3598
000721	5910-66-100-5990
000722	5910-66-090-1493
000723	5905-66-102-0581
000724	5999-66-032-3325
000725	5305-66-031-5698
000726	5310-99-943-6075
000727	5905-00-419-3949
000728	5961-00-842-9864
000729	5340-66-031-9415
000730	5915-00-846-0453
000731	5910-66-100-5904
000732	5961-66-057-9155
000733	5910-66-090-1378
000734	5910-66-031-7809
000735	5910-66-100-8273
000736	5950-66-060-1766
000737	5905-00-240-2736
000738	5905-00-498-5684
000739	5910-66-100-5944
000740	5950-66-032-0711
000741	5950-66-032-0710
000742	5910-66-100-5982
000743	5905-00-240-7982
000744	5905-00-721-0009
000745	5905-00-422-5186
000746	5910-00-113-9817
000747	5905-00-240-2747
000748	5905-00-413-1029
000749	5905-00-240-2745
000750	5905-00-233-6815
000751	5910-66-090-1093
000752	5935-66-031-8459
000753	5905-00-490-0246
000754	5905-00-240-7954
000755	5905-00-184-7705
000756	5905-00-240-2728
000757	5905-00-491-2638
000758	5961-00-925-3777
000759	5910-00-495-0042
000760	5961-66-062-4264
000761	5910-66-100-8045
000762	5905-00-240-7958
000763	5950-66-032-0709
000764	5910-66-090-1376
000765	5905-00-400-9612
000787	5961-00-842-9864
000788	5910-00-450-8641
000789	5935-66-031-8459
000790	5905-00-240-2736
000791	5905-00-422-5186
000792	5910-00-113-9817
000793	5905-00-458-9263
000794	5910-66-100-5992
000795	5905-00-438-0505
000796	5999-66-031-4291
000797	5961-00-988-1912
000798	5910-66-100-8273
000799	5910-00-010-8159
000800	5905-00-184-7705
000801	5910-66-100-8049
000802	5905-00-240-2748
000803	5905-00-223-2610

SERIAL No.	DSN
000804	5910-66-100-5892
000805	5910-00-935-3511
000806	5905-00-240-7950
000807	5950-66-032-0716
000808	5961-00-911-6185
000809	5950-66-032-0715
000810	5905-00-240-7960
000811	5910-66-100-8270
000812	5905-00-400-9612
000813	5910-66-100-8044
000814	5950-66-032-0718
000815	5905-00-240-7954
000816	5905-00-240-7950
000817	5950-66-032-0717
000818	5905-00-419-3949
000819	5905-00-240-2726
000820	5905-00-458-9267
000821	5910-66-100-5893
000822	5910-66-100-5994
000823	5950-66-032-0713
000824	5905-00-240-2746
000825	5905-00-240-2747
000826	5910-66-100-8042
000827	5950-66-030-0240
000828	5950-66-086-8007
000829	5940-99-955-5811
000830	5940-99-142-3263
000831	5950-66-082-6343
000853	5905-00-490-0246
000854	5961-00-842-9864
000855	5961-00-911-6185
000856	5999-66-031-4291
000857	5905-00-223-2610
000858	5910-00-113-9817
000859	5950-66-032-0719
000860	5905-00-458-9263
000861	5910-00-935-3511
000862	5910-66-100-8045
000863	5905-00-422-5186
000864	5935-66-031-8459
000866	5905-00-419-0189
000867	5910-00-450-8641
000868	5905-00-184-7705
000869	5905-00-240-2736
000870	5905-00-438-0505
000871	5905-00-240-7979
000872	5961-00-988-1912
000873	5905-00-498-5684
000874	5910-01-057-0370
000875	5910-66-100-5904
000876	5950-66-032-1792
000877	5910-66-100-5893
000878	5905-00-139-2138
000879	5950-66-032-1781
000880	5940-99-955-5811
000881	5950-66-082-6343
000903	5910-00-450-8641
000904	5961-00-911-6185
000905	5999-66-031-4291
000906	5910-00-450-8641
000907	5910-00-926-9784
000908	5961-00-852-3602
000909	5961-00-925-3777
000910	5935-66-031-8459
000911	5910-00-924-3984

SERIAL No.	DSN
000912	5961-00-104-9948
000913	5961-00-925-3777
000914	5961-00-490-0151
000915	5910-00-817-4722
000916	5910-00-113-9817
000917	5961-66-057-9155
000918	5961-00-985-9111
000919	5999-00-909-3157
000920	5910-01-004-3291
000921	5961-00-988-1912
000922	5935-66-031-7818
000923	5950-66-032-1783
000924	5905-00-498-5684
000925	5905-00-240-2749
000926	5905-00-490-0246
000927	5905-99-013-6239
000928	5905-00-240-2728
000929	5905-00-007-3808
000930	5905-00-240-7954
000931	5905-00-240-7950
000932	5905-00-249-1286
000933	5905-01-009-0175
000934	5950-66-032-1787
000935	5305-66-031-5699
000936	5310-99-943-6075
000937	5310-66-031-5896
000938	5905-00-240-2728
000939	5905-00-723-9282
000940	5950-66-032-1788
000941	5905-00-240-2736
000942	5905-00-422-5186
000943	5905-66-032-1330
000944	5905-00-437-6298
000966	5935-00-952-8198
000967	5935-00-807-3454
000968	5305-66-031-5714
000969	5310-99-943-6075
000970	5310-66-031-5896
000971	5305-66-031-5914
000972	5310-99-971-3720
000973	5305-66-031-5711
000974	5310-66-031-5897
000975	5935-66-103-3458
000976	5310-66-031-5895
000977	5961-66-054-1869
000978	5340-66-031-7985
000979	5305-66-031-5707
000980	5310-99-946-9795
000981	5305-66-031-5620
000982	5360-66-060-4225
000984	5305-66-102-1572
000986	5935-99-194-9325
000987	5945-99-643-6570
000988	5820-66-032-1553
000989	5305-66-031-9416
000990	5315-66-031-7989
000991	5305-66-031-5690
000992	3040-66-032-1758
000993	5305-66-031-5713
000994	5310-66-014-1501
000995	3040-66-032-1754
000997	5820-66-086-8787
000998	3040-66-032-1757
000999	5820-66-032-1554
001000	3040-66-032-1755

SERIAL No.	DSN
001001	5935-00-057-2690
001002	3040-66-032-1759
001003	5935-00-937-6278
001005	5935-00-840-7683
001006	5305-66-031-5688
001007	5340-66-019-6130
001008	5935-66-032-1774
001009	5935-00-856-2659
001010	5935-66-086-8785
001011	3040-66-032-1758
001012	5935-66-032-1763
001013	5935-00-807-3455
001014	5935-00-963-0124
001015	5340-66-019-6132
001016	5935-66-032-1456
001017	5365-66-031-5989
001018	5940-66-018-7314
001019	5305-66-031-5715
001020	5935-66-032-1773
001022	5305-66-082-6605
001023	5305-66-014-1493
001024	5999-66-032-1457
001025	5970-66-032-1761
001026	5970-66-032-1762
001027	5305-66-031-5710
001029	9905-66-016-3533
001031	5820-66-097-0310
001032	5340-66-102-1573
001033	5305-66-015-9932
001035	5340-66-031-7999
001059	5305-66-031-5688
001060	5310-99-971-3720
001061	5935-00-925-1786
001062	5999-00-021-2118
001063	5995-66-048-8605
001064	5340-66-031-7992
001065	5310-66-031-5896
001066	5340-66-019-6130
001067	5305-66-031-5709
001069	5310-66-031-5895
001070	5305-66-031-5689
001071	5940-99-195-4815
001073	5365-66-086-8789
001074	5820-66-086-8790
001075	3020-66-086-8788
001076	5820-66-086-8791
001077	3120-66-086-8035
001079	5820-66-086-8792
001081	5820-66-086-8793
001082	5315-66-031-9513
001083	5820-66-086-8794
001084	5315-00-823-8740
001085	5365-66-082-6676
001086	5365-66-086-8795
001089	5307-66-082-6871
001090	5365-66-082-6674
001091	5950-66-032-1752
001092	5930-66-032-1753
001093	5970-66-032-4247
001094	5365-66-082-6675
001095	5340-66-082-6877
001096	5310-66-031-5897
001097	5935-00-952-8198
001120	5940-99-956-9738
001121	5910-00-113-5499

LAMSON PARAGON FORMALINER PARAFLO 3320

SERIAL No.	DSN
001122	5910-00-111-4811
001123	5905-00-240-7950
001124	5905-66-102-0563
001125	5961-66-097-0309
001126	5999-66-031-4291
001127	5910-66-090-1084
001128	5905-01-050-4106
001129	5961-00-842-9864
001151	5820-66-032-1322
001152	5910-66-090-1376
001153	5305-66-031-5697
001154	5940-66-018-7314
001156	5305-66-031-5705
001157	5310-99-944-5616
001158	5820-66-040-7285
001159	5340-66-082-6607
001161	5340-66-082-6606
001163	5310-99-943-6075
001164	5310-66-031-5896
001165	5970-66-032-4246
001166	5360-66-031-9725
001167	3110-66-014-0633
001168	5820-66-025-8905
001171	5305-66-031-5717
001172	5820-66-040-7289
001173	5935-00-904-1380
001174	5305-66-031-5699
001176	5935-00-021-2120
001178	5305-66-031-5704
001180	5820-66-086-8798
001181	5910-00-812-8531
001183	5305-66-031-5705
001184	5910-66-090-1440
001185	5820-66-040-7286
001186	5930-66-032-0798
001187	5930-66-032-0799
001188	5820-66-040-7287
001189	5820-66-025-8901
001190	9905-66-016-3531
001194	5365-66-082-6376
001195	5365-66-082-6966
001196	5365-66-082-6967
001197	5950-66-060-1633
001198	5950-66-060-1632
001199	5950-66-060-1631
001200	5950-66-060-1630
001201	5950-66-060-1629
001202	5950-66-060-1628
001203	5950-66-060-1627
001204	5950-66-060-1626
001205	5820-66-032-0797
001206	5820-66-060-1625
001228	5950-66-082-6343
001229	5950-66-032-3814
001230	5950-66-032-3813
001231	5950-66-032-3815
001232	5950-66-060-1635
001233	5950-66-060-1636
001234	5950-66-060-1637
001235	5950-66-032-3816
001236	5950-66-031-8228
001237	5910-66-031-7809
001238	5920-00-942-9927
001239	5820-66-060-1634
001240	5950-66-060-1638

SERIAL No.	DSN
001241	5910-00-928-3235
001242	5910-66-090-1087
001243	5910-00-450-8641
001244	5905-00-419-0189
001245	5961-00-842-9864
001246	5905-00-007-3808
001247	5905-00-233-6815
001248	5905-99-013-6239
001249	5905-00-240-2745
001250	5905-00-240-2736
001251	5961-00-051-5975
001252	5910-66-090-1084
001253	5910-00-952-9006
001254	5950-66-060-1639
001255	5961-00-448-5113
001256	5905-01-009-0175
001257	5950-66-032-1795
001258	5905-00-240-2728
001259	5910-66-090-1440
001260	5940-99-955-5811
001261	5999-66-031-4291
001262	5910-66-100-5804
001263	5910-66-100-8277
001264	5910-66-100-5892
001265	5910-66-100-8279
001266	5910-66-100-8276
001267	5910-66-100-5982
001289	5950-66-060-1754
001290	5961-00-252-1309
001291	5910-00-111-4811
001292	5905-00-240-2748
001293	5950-66-060-1752
001294	5950-66-060-1753
001295	5940-99-955-5811
001296	5940-99-952-6793
001319	5910-66-031-7809
001320	5940-99-955-5811
001321	5950-66-060-1764
001322	5950-66-060-1763
001323	5950-66-060-1672
001324	5950-66-060-1761
001325	5950-66-060-1760
001326	5950-66-060-1765
001327	5910-66-100-5803
001328	5910-66-100-8300
001329	5910-66-100-5948
001330	5910-66-100-5802
001331	5910-66-100-8302
001332	5910-66-100-5801
001333	5910-66-100-8303
001334	5910-66-100-8268
001335	5910-66-100-8305
001336	5910-66-100-8269
001337	5910-66-100-8274
001338	5950-66-082-6343
001361	5910-66-031-7809
001362	5940-99-955-5811
001363	5950-66-060-1764
001364	5950-66-060-1763
001365	5950-66-060-1672
001366	5950-66-060-1761
001367	5950-66-060-1760
001368	5950-66-060-1765
001369	5910-66-100-5803
001370	5910-66-100-8300

SERIAL No.	DSN
001371	5910-66-100-5948
001372	5910-66-100-5802
001373	5910-66-100-8302
001374	5910-66-100-5801
001375	5910-66-100-8303
001376	5910-66-100-8268
001377	5910-66-100-8305
001378	5910-66-100-8269
001379	5910-66-100-8274
001380	5950-66-082-6343
001402	5950-66-031-8224
001403	5910-66-031-7809
001404	5950-66-031-8223
001405	5950-66-031-8222
001406	5950-66-031-8227
001407	5950-66-031-8226
001408	5950-66-031-8225
001409	5910-66-100-5801
001410	5910-66-100-8303
001411	5910-66-100-8268
001412	5910-66-100-8305
001413	5910-66-100-8305
001414	5910-66-100-8274
001415	5910-66-100-5803
001416	5910-66-100-8300
001417	5910-66-100-5948
001418	5910-66-100-5802
001419	5910-66-100-8302
001420	5940-99-955-5811
001421	5950-66-082-6343
001444	5910-66-090-1378
001445	5905-00-240-2748
001446	5905-00-184-7705
001447	5961-00-448-5113
001448	5999-66-031-4291
001449	5905-01-009-0175
001450	5940-99-952-6793
001451	5920-00-942-9927
001452	5910-00-450-8641
001453	5950-66-032-1795
001454	5905-00-240-2726
001455	5905-00-007-3808
001456	5905-00-763-9754
001457	5905-00-419-0189
001459	5940-99-955-5811
001460	5905-00-458-9267
001461	5905-00-450-2827
001462	5905-00-223-2610
001486	5961-00-842-9864
001487	5905-00-240-7954
001488	5905-99-013-6063
001489	5905-00-240-2734
001490	5905-00-763-9754
001491	5905-99-013-5694
001492	5905-00-007-3808
001493	5920-00-942-9927
001494	5940-99-955-5811
001495	5905-00-458-9263
001496	5910-00-952-9006
001497	5905-99-013-5936
001498	5940-99-952-6793
001499	5961-00-252-1309
001500	5905-66-102-0563
001501	5905-00-240-7983
001502	5961-00-925-3777

SERIAL No.	DSN
001503	5999-66-031-4291
001504	5905-00-249-1286
001505	5961-00-814-9532
001528	5365-00-819-0088
001529	3020-66-032-3322
001530	5820-66-086-8863
001531	3020-66-032-3323
001532	5305-66-031-5691
001533	5310-66-031-5895
001534	5310-99-971-3720
001535	5310-66-031-5897
001536	3010-66-032-3321
001542	5970-66-032-3318
001543	5365-66-031-9733
001544	5310-66-031-9734
001545	3120-66-031-9731
001546	3040-66-032-3320
001551	3010-66-032-3324
001558	5315-66-031-9726
001561	5315-66-031-9513
001562	3010-66-032-3310
001564	5305-66-031-5688
001565	5310-66-031-9732
001566	3040-66-032-3314
001569	5305-66-031-5709
001570	5820-66-086-8742
001571	5820-66-086-8743
001572	5310-66-031-9730
001573	5305-66-031-5683
001574	5310-99-946-9795
001599	5305-66-031-5705
001600	5310-99-944-5616
001601	3020-66-032-3312
001602	5365-00-663-1245
001603	5305-66-031-9729
001605	5820-66-025-9755
001609	5305-66-012-3823
001610	5310-99-946-9795
001611	5310-66-031-9727
001613	5305-66-031-5699
001614	5940-66-018-7314
001615	5310-99-943-6075
001616	5310-66-031-5896
001617	3110-00-100-6171
001618	5999-66-086-8868
001619	5310-66-031-9730
001620	3120-66-031-9731
001621	5365-66-031-5910
001622	5820-66-032-3313
001627	5305-66-031-5716
001629	5910-66-032-1323
001630	5305-66-031-9728
001631	5310-99-971-3720
001655	5915-00-846-0453
001656	5305-66-031-5689
001657	5310-99-971-3720
001658	5915-00-846-0451
001659	5305-66-031-5698
001660	5310-99-943-6075
001661	5940-66-018-7314
001662	5310-66-031-5895
001663	5340-66-031-9415
001664	5305-66-031-5709
001665	9905-66-016-3531
001666	5365-66-082-6673

SERIAL No.	DSN
001667	5935-00-904-1380
001668	5935-00-885-6508
001669	5305-66-031-5713
001670	5310-66-031-5896
001671	5935-00-057-2690
001672	5820-66-027-0555
001673	5820-66-032-1334
001674	5315-00-823-8740
001675	5820-66-086-8793
001676	5340-66-019-5410
001677	5305-66-031-5699
001678	5310-66-014-1501
001679	5910-66-028-4082
001681	5915-66-028-5964
001704	5905-00-491-2638
001705	5905-00-419-0189
001706	5905-00-240-7954
001707	5905-00-240-2734
001709	5905-00-240-2728
001710	5905-00-240-2747
001711	5905-00-240-2746
001712	5940-99-955-5811
001734	5820-66-086-8871
001736	5995-66-032-1324
001737	5820-66-027-1432
001738	5820-66-027-1433
001739	5820-66-027-1435
001740	5820-66-027-1434
001741	5820-66-027-1436
001742	9905-66-016-3531
001743	5820-66-086-8744
001744	5315-66-086-8080
001746	5820-66-027-1437
001747	5820-66-086-8780
001748	5305-66-032-0382
001749	5310-99-943-6075
001750	5340-66-086-8082
001751	5305-66-031-5705
001752	5310-99-944-5616
001754	5306-66-032-1371
001755	5970-66-032-1332
001757	5305-66-031-5698
001758	5820-66-025-9760
001759	5340-66-086-8083
001760	5820-66-086-8745
001761	5305-66-031-5689
001762	5310-99-971-3720
001763	5305-66-031-5699
001785	5935-00-054-5853
001786	5961-99-037-2903
001787	5961-00-988-1912
001788	5910-00-010-8422
001789	5905-00-116-8554
001790	5961-00-051-5975
001791	5905-00-240-2745
001792	5905-00-240-2726
001793	5905-00-240-7954
001794	5905-00-491-2638
001795	5905-00-240-2747
001796	5905-00-184-7705
001797	5905-00-240-2726
001798	5961-00-997-1274
001799	5910-00-124-0032
001800	5905-66-032-1327
001801	5961-00-905-4815

SERIAL No.	DSN
001802	5910-00-113-9817
001803	5905-00-240-2746
001804	5905-00-458-9263
001805	5950-66-032-0706
001806	5905-00-197-4197
001807	5961-00-913-8441
001808	5905-00-482-0505
001809	5305-66-031-5699
001810	5310-99-943-6075
001811	5310-66-031-5896
001812	5935-66-032-1326
001813	5305-66-031-5700
001814	5310-66-086-8084
001815	5365-66-032-1328
001816	5340-66-086-8085
001817	5905-00-240-7955
001818	5910-00-450-8641
001819	5905-00-401-8683
001820	5905-99-013-6239
001821	5910-66-100-8273
001822	5905-00-498-5683
001823	5905-00-240-2749
001824	5905-00-240-2728
001825	5905-00-240-2747
001826	5910-00-495-0042
001827	5910-00-007-2000
001828	5905-00-438-0505
001829	5961-00-925-3777
001831	5935-00-885-6508
001832	5999-66-031-4292
001833	5999-66-031-4291
001834	5940-99-955-5811
001835	5935-00-172-1097
001836	5305-66-031-5698
001837	5310-66-014-1501
001860	5905-00-240-7980
001861	5905-00-249-1286
001862	5905-00-240-2734
001863	5905-00-400-9612
001864	5910-00-495-0042
001865	5910-00-880-7239
001866	5961-00-880-7078
001867	5961-00-988-1912
001868	5999-66-031-4291
001869	5905-00-240-2747
001870	5950-66-032-0704
001871	5905-00-240-7979
001872	5961-99-037-2903
001873	5910-00-010-8422
001874	5905-00-413-1029
001875	5905-66-032-1333
001876	5905-00-240-2749
001877	5905-00-490-0246
001878	5961-00-490-0151
001879	5910-01-004-3291
001880	5905-00-984-3914
001881	5910-66-090-1259
001882	5961-00-925-3777
001883	5905-00-240-2726
001884	5905-00-240-7954
001885	5950-66-032-1783
001886	5950-66-032-0703
001887	5910-00-450-8641
001910	5910-00-811-4992
001911	5950-66-032-0307

SERIAL No.	DSN
001912	5950-66-032-0700
001913	5910-00-724-7357
001914	5905-00-498-5683
001915	5950-66-032-0302
001916	5950-66-032-0305
001917	5910-66-031-5649
001918	5910-00-950-0385
001919	5950-66-032-0702
001920	5910-66-031-5647
001921	5950-66-032-0701
001922	5910-66-031-5646
001923	5940-99-946-7554
001924	5950-66-082-6343
001945	5910-66-031-5649
001946	5950-66-032-0302
001947	5950-66-032-0309
001948	5905-00-498-5683
001949	5950-66-031-9797
001950	5910-00-950-0385
001951	5950-66-032-0312
001952	5910-00-984-7051
001953	5910-66-031-5842
001954	5950-66-032-0311
001955	5950-66-032-0310
001956	5910-00-811-4992
001957	5910-66-031-5841
001958	5940-99-946-7554
001959	5950-66-082-6343
001981	5910-00-950-0382
001982	5950-66-032-0304
001983	5905-00-498-5683
001984	5950-66-032-0306
001985	5910-00-811-4992
001986	5910-66-031-5844
001987	5950-66-032-0308
001988	5910-66-031-5846
001989	5910-66-031-5646
001990	5950-66-032-3808
001991	5950-66-032-0305
001992	5910-66-031-5847
001993	5910-66-031-5845
001994	5950-66-031-9797
001995	5940-99-946-7554
001996	5950-66-082-6343
002018	5910-66-031-5647
002019	5950-66-032-0301
002020	5950-66-031-9799
002021	5905-00-498-5683
002022	5950-66-031-9795
002023	5910-00-950-0385
002024	5910-66-031-5841
002025	5950-66-032-0303
002026	5910-00-889-4564
002027	5950-66-032-3809
002028	5950-66-032-0300
002029	5910-66-031-5842
002030	5910-66-031-5843
002031	5940-99-946-7554
002032	5950-66-082-6343
002054	5910-66-031-5841
002055	5950-66-031-8230
002056	5950-66-031-9795
002057	5905-00-498-5683
002058	5950-66-031-9796
002059	5910-00-984-7051

SERIAL No.	DSN
002060	5950-66-031-9798
002061	5910-66-031-5849
002062	5950-66-032-3812
002063	5910-66-031-5845
002064	5950-66-031-8231
002065	5910-66-031-5846
002066	5910-66-031-5848
002067	5940-99-142-3263
002068	5950-66-082-6343
002092	5820-66-040-7296
002093	5305-66-031-5698
002094	5310-99-971-3720
002095	5305-66-031-5637
002096	5310-99-971-3720
002097	5305-66-031-5705
002098	5310-99-944-5616
002099	5820-66-093-7802
002100	5940-66-041-6207
002101	5820-66-040-7294
002103	5930-66-104-6407
002104	5820-66-040-7292
002105	5820-66-040-7293
002107	5315-66-031-5639
002129	5340-66-043-9832
002130	5305-66-043-9833
002131	5310-99-943-6075
002132	5310-66-031-5896
002134	5305-66-043-9835
002135	5310-99-944-5616
002136	5310-66-031-7984
002137	5340-66-043-9699
002138	5305-66-031-5705
002139	5820-66-086-8781
002140	5305-66-031-5709
002141	5310-99-971-3720
002142	5310-66-031-5895
002143	5305-66-102-1577
002147	5910-66-032-0505
002148	5340-66-102-1574
002150	5820-66-086-8881
002151	5305-66-031-5717
002152	5340-66-102-1575
002153	5305-66-102-1576
002179	5950-66-065-1157
002180	5905-00-240-7983
002181	5910-66-058-5174
002182	5910-00-926-9784
002183	5905-00-240-2728
002184	5905-00-938-7571
002185	5910-00-450-8641
002186	5905-00-007-3808
002187	5999-66-031-4291
002188	5961-66-050-6663
002189	5961-00-842-9864
002190	5905-00-240-2734
002191	5905-00-240-2748
002192	5905-00-437-6298
002193	5961-66-055-4855
002194	5999-00-909-3157
002195	5961-00-985-9111
002196	5905-00-240-2726
002197	5961-00-925-3777
002198	5910-66-090-1376
002199	5905-00-563-1595
002200	5905-00-458-9267

SERIAL No.	DSN
002201	5905-66-042-4275
002224	5961-00-842-9864
002225	5905-00-240-2734
002226	5961-00-400-6242
002227	5910-00-142-6950
002228	5905-00-482-0505
002229	5961-00-465-8169
002230	5961-00-626-9576
002231	5940-99-955-5811
002232	5905-00-563-1595
002233	5910-00-495-0042
002234	5910-00-113-5499
002235	5910-66-025-7799
002236	5910-00-905-4097
002237	5910-00-904-3654
002238	5961-00-925-3777
002239	5905-00-240-2728
002240	5905-00-240-2745
002241	5905-00-240-2726
002242	5961-00-911-6185
002243	5961-00-051-5975
002244	5940-99-956-9738
002245	5950-66-065-1108
002246	5961-00-110-9356
002247	5910-00-113-9817
002248	5910-66-098-4630
002249	5950-66-065-1107
002250	5905-00-223-2610
002251	5905-00-496-7860
002252	5910-00-111-4811
002253	5905-00-422-5186
002254	5905-00-249-1286
002255	5905-00-240-7958
002256	5905-00-240-7979
002257	5905-00-458-9263
002258	5910-00-809-4701
002259	5950-00-027-0485
002261	5950-66-032-1795
002262	5999-66-031-4291
002286	5950-66-065-1157
002287	5910-00-926-9784
002288	5910-00-113-5499
002310	5820-66-040-7295
002311	5930-66-065-1263
002312	5930-66-065-1266
002313	5930-66-065-1264
002314	5930-66-065-1262
002315	5930-66-065-1261
002316	5930-66-065-1265
002317	5305-66-031-5702
002318	5310-66-018-1856
002319	5970-66-065-1507
002320	5970-66-065-1508
002321	5365-66-063-9624
002322	5325-66-063-9625
002323	5310-00-833-5856
002335	5905-00-240-2728
002336	5940-99-952-6793
002337	5962-66-065-1144
002338	5910-66-090-1092
002339	5905-00-563-1595
002341	5999-66-031-4291
002342	5961-66-050-6663
002343	5962-66-065-1142
002344	5905-00-240-7983

SERIAL No.	DSN
002345	5905-00-240-2734
002346	5961-00-842-9864
002347	5905-00-240-2746
002348	5962-66-065-1143
002349	5961-66-038-5107
002350	5905-00-240-7982
002351	5940-99-956-9738
002352	5905-00-491-2638
002353	5910-00-952-9006
002354	5961-00-911-6185
002355	5905-00-400-9612
002356	5905-00-223-2610
002357	5905-00-240-2726
002358	5961-00-925-3777
002359	5905-00-007-3808
002360	5905-00-139-2138
002361	5961-66-050-6663
002362	5910-00-010-8159
002363	5905-00-240-7958
002377	5961-00-842-9864
002378	5910-00-936-1521
002379	5905-00-240-7954
002380	5905-00-240-2736
002381	5961-00-929-2929
002382	5999-66-031-4291
002383	5910-66-030-6175
002384	5910-00-189-4248
002385	5905-00-438-0505
002386	5905-00-150-5256
002387	5905-00-240-7983
002388	5905-00-491-2638
002389	5961-66-050-6663
002390	5962-00-219-7312
002391	5905-00-240-7979
002392	5910-66-016-8236
002393	5905-00-458-9263
002394	5910-14-300-2115
002395	5905-00-240-2728
002396	5910-66-058-5586
002398	5910-66-090-1087
002399	5962-00-008-6842
002400	5905-00-563-1595
002401	5905-00-240-2748
002402	5962-00-251-1378
002403	5905-00-249-1286
002404	5910-00-951-8036
002405	5940-99-956-9738
002406	5905-00-007-3808
002407	5910-00-952-9006
002408	5905-00-419-3949
002409	5910-00-029-4852
002410	5961-00-239-8529
002411	5910-00-113-5499
002412	5905-00-126-6703
002436	5940-99-956-9738
002437	5910-00-134-0628
002438	5905-00-223-2610
002439	5961-00-842-9864
002440	5905-00-422-5186
002441	5905-00-437-6298
002442	5905-00-563-1595
002443	5910-00-495-0042
002444	5905-00-240-2736
002445	5910-00-113-5499
002446	5905-00-240-2734

SERIAL No.	DSN
002447	5905-00-184-7705
002448	5910-00-583-4891
002449	5950-66-063-9811
002450	5910-00-111-4811
002451	5961-66-063-9751
002452	5910-00-486-6772
002453	5905-00-240-2748
002454	5961-00-448-5113
002455	5905-00-240-7980
002456	5905-00-240-7979
002457	5910-00-139-6699
002458	5961-66-063-9750
002459	5950-66-063-9812
002460	5961-66-063-9749
002461	5950-66-063-9800
002462	5905-00-458-9267
002464	5905-00-419-3949
002465	5950-66-031-8219
002466	5910-00-007-2003
002467	5961-00-051-5975
002468	5999-66-031-4291
002469	5961-00-252-1309
002470	5905-00-240-2748
002471	5961-00-905-4815
002472	5910-00-905-4097
002473	5905-00-240-2726
002474	5905-99-013-6239
002475	5961-00-902-7478
002476	5905-00-240-2746
002477	5905-00-413-1029
002478	5905-00-491-2638
002479	5910-00-082-4787
002480	5905-00-240-2747
002481	5905-00-438-0505
002482	5905-00-240-7983
002483	5950-66-032-1795
002484	5905-01-009-0175
002487	5305-66-015-9940
002514	5306-66-031-5909
002515	5305-66-031-5689
002516	5310-99-971-3720
002517	5330-66-013-6057
002518	5935-66-048-1524
002519	5330-66-082-6872
002520	6210-66-032-4015
002521	5365-66-031-9392
002522	5330-66-031-7997
002523	6685-66-056-1190
002524	5310-66-031-5985
002525	5305-66-031-5698
002526	5310-99-943-6075
002527	5355-66-032-1453
002528	5305-66-031-5702
002530	5305-66-031-5697
002531	5940-66-030-8561
002532	5365-66-067-7240
002533	5365-00-200-5234
002534	5340-66-032-1455
002535	5310-66-031-5982
002536	5310-66-031-5908
002537	5985-66-032-1449
002538	5330-00-983-7786
002539	5970-66-032-1452
002540	5310-66-031-5986
002541	5940-66-086-8910

SERIAL No.	DSN
002542	5310-66-086-8086
002543	5310-99-943-6080
002544	5310-66-031-5718
002545	5935-66-054-1951
002546	5935-66-086-8926
002548	5935-00-823-0667
002549	5935-00-997-8026
002552	5805-66-086-8928
002553	5305-66-086-8026
002554	9905-66-051-7564
002555	4440-66-032-4017
002556	5355-66-067-7089
002557	5315-66-031-9394
002558	5305-66-012-5182
002559	5355-66-031-8458
002560	5935-66-032-1445
002561	5330-00-984-5667
002562	5310-66-031-5911
002563	5330-00-187-3614
002564	5935-66-032-1446
002565	5305-66-031-5699
002566	5940-66-018-7314
002567	5905-66-032-1451
002568	5905-66-032-1450
002569	5820-66-040-7280
002570	3010-66-032-1454
002571	5330-66-017-2150
002573	9905-66-016-3534
002574	5930-66-028-3928
002575	5310-66-031-9393
002576	5330-66-018-9273
002577	5310-99-943-6082
002578	5905-00-240-2736
002579	5935-00-856-2659
002580	5365-00-819-0088
002581	5820-66-032-1540
002582	5360-66-031-9412
002583	5820-66-032-1331
002584	5360-66-031-9413
002585	5820-66-032-1541
002586	5930-66-102-0576
002588	5910-00-450-8641
002590	5820-66-027-5297
002591	5820-66-028-3927
002592	5930-66-102-0575
002593	5935-66-032-1448
002594	5935-00-021-2120
002595	5930-66-028-5956
002596	5305-66-086-8020
002597	5820-66-052-5328
002598	5930-66-028-5957
002599	5961-00-880-4783
002622	5940-99-955-5811
002623	5961-00-911-6185
002624	5999-66-031-4291
002625	5961-99-118-4907
002626	5905-00-240-7954
002627	5905-00-437-6298
002628	5961-00-925-3777
002629	5905-00-240-7979
002630	5999-66-060-1775
002631	5961-00-842-9864
002654	5961-00-842-9864
002655	5910-00-952-9006
002656	5905-00-490-0246

LAWSON PARAGON FORMALINER PAREFLO 68326

SERIAL No.	DSN
002657	5905-00-240-7979
002658	5950-66-032-0708
002659	5905-00-240-7980
002660	5905-00-240-2749
002661	5905-00-400-9612
002662	5910-00-935-3511
002663	5940-99-955-5811
002664	5940-99-952-6793
002687	5820-66-054-1578
002688	5360-66-052-5458
002689	5820-66-086-8932
002690	5365-00-598-1269
002691	5305-66-031-5699
002692	5310-66-014-1501
002693	5310-99-943-6075
002694	5310-66-031-5896
002695	5930-66-032-1546
002696	3020-66-032-1552
002698	5930-66-032-1547
002699	5305-66-086-8027
002700	5950-66-032-1545
002701	5950-66-088-7040
002702	5950-66-088-7045
002703	5910-66-031-5853
002704	5365-66-082-6372
002705	5910-66-031-5852
002706	5910-66-031-5851
002707	5910-66-031-5850
002708	5910-66-031-5856
002709	5365-66-082-6373
002710	5365-66-082-6374
002711	5910-66-031-5855
002712	5930-66-032-1549
002713	5910-00-811-4992
002714	5910-66-031-7703
002715	5930-66-032-1551
002716	5910-66-031-5859
002717	5930-66-032-1550
002718	5910-66-031-5854
002719	5365-66-082-6375
002741	5961-00-925-3777
002742	5999-66-031-4291
002743	5961-00-400-6242
002744	5999-66-031-4292
002745	5961-00-842-9864
002747	5940-99-955-5811
002748	5910-00-714-5964
002756	5305-66-031-9395
002757	5310-99-946-9795
002758	5820-66-060-1769
002759	5305-66-031-5699
002760	5310-99-943-6075
002761	5961-66-060-1771
002762	5995-66-048-1523
002764	5310-66-032-2514
002765	5940-66-018-7314
002766	5940-66-018-1891
002789	5910-00-124-0032
002791	5940-99-955-5811
002792	5905-00-240-2726
002793	5910-00-450-8641
002794	5910-66-090-1378
002795	5340-66-060-4226
002796	5961-00-490-0151
002797	5950-66-041-6175

SERIAL No.	DSN
002798	5910-66-090-1087
002799	5940-99-956-9738
002800	5910-00-450-8641
002801	5905-00-717-6590
002802	5905-00-482-0505
002803	5910-00-010-8159
002804	5905-00-240-7949
002805	5950-66-041-6174
002806	5950-66-041-6176

SERIAL No.	DSN

CHAPTER 1

SECTION 2

NUMERICAL INDEX

DEFENCE STOCK NUMBER SEQUENCE

SERIAL No.	DSN
002570	3010-66-032-1454
001562	3010-66-032-3310
001536	3010-66-032-3321
001551	3010-66-032-3324
000177	3020-66-031-8456
002696	3020-66-032-1552
001601	3020-66-032-3312
001529	3020-66-032-3322
001531	3020-66-032-3323
001075	3020-66-086-8788
000995	3040-66-032-1754
001000	3040-66-032-1755
000998	3040-66-032-1757
000992	3040-66-032-1758
001011	3040-66-032-1758
001002	3040-66-032-1759
001566	3040-66-032-3314
001546	3040-66-032-3320
000149	3040-66-086-8739
001617	3110-00-100-6171
001167	3110-66-014-0633
001545	3120-66-031-9731
001620	3120-66-031-9731
001077	3120-66-086-8035
000023	4020-66-014-4840
000056	4020-66-014-4840
000451	4020-66-014-4840
000059	4020-66-086-8740
000187	4020-66-089-5347
002555	4440-66-032-4017
000430	4440-99-014-2497
000104	4730-66-031-5632
001609	5305-66-012-3823
002558	5305-66-012-5182
000364	5305-66-012-6189
001023	5305-66-014-1493
001033	5305-66-015-9932
002487	5305-66-015-9940
000981	5305-66-031-5620
000393	5305-66-031-5624
000148	5305-66-031-5629
002095	5305-66-031-5637
000426	5305-66-031-5638
000432	5305-66-031-5680
001573	5305-66-031-5683
000304	5305-66-031-5688
001006	5305-66-031-5688
001059	5305-66-031-5688
001564	5305-66-031-5688
001070	5305-66-031-5689
001656	5305-66-031-5689
001761	5305-66-031-5689
002515	5305-66-031-5689
000991	5305-66-031-5690
001532	5305-66-031-5691
000302	5305-66-031-5693
000300	5305-66-031-5695
001153	5305-66-031-5697
002530	5305-66-031-5697
000358	5305-66-031-5698
000725	5305-66-031-5698
001659	5305-66-031-5698
001757	5305-66-031-5698
001836	5305-66-031-5698
002093	5305-66-031-5698

SERIAL No.	DSN
002525	5305-66-031-5698
000175	5305-66-031-5699
000454	5305-66-031-5699
000935	5305-66-031-5699
001174	5305-66-031-5699
001613	5305-66-031-5699
001677	5305-66-031-5699
001763	5305-66-031-5699
001809	5305-66-031-5699
002565	5305-66-031-5699
002691	5305-66-031-5699
002759	5305-66-031-5699
001813	5305-66-031-5700
002317	5305-66-031-5702
002528	5305-66-031-5702
001178	5305-66-031-5704
001156	5305-66-031-5705
001183	5305-66-031-5705
001599	5305-66-031-5705
001751	5305-66-031-5705
002097	5305-66-031-5705
002138	5305-66-031-5705
000979	5305-66-031-5707
001067	5305-66-031-5709
001569	5305-66-031-5709
001664	5305-66-031-5709
002140	5305-66-031-5709
001027	5305-66-031-5710
000973	5305-66-031-5711
000482	5305-66-031-5713
000993	5305-66-031-5713
001669	5305-66-031-5713
000968	5305-66-031-5714
001019	5305-66-031-5715
001627	5305-66-031-5716
001171	5305-66-031-5717
002151	5305-66-031-5717
000971	5305-66-031-5914
002756	5305-66-031-9395
000989	5305-66-031-9416
001630	5305-66-031-9728
001603	5305-66-031-9729
001748	5305-66-032-0382
000222	5305-66-033-3624
000235	5305-66-034-7852
002130	5305-66-043-9833
002134	5305-66-043-9835
000195	5305-66-047-0214
000478	5305-66-063-2705
000394	5305-66-067-7239
001022	5305-66-082-6605
000347	5305-66-086-8019
000361	5305-66-086-8020
002596	5305-66-086-8020
000452	5305-66-086-8021
002553	5305-66-086-8026
002699	5305-66-086-8027
000984	5305-66-102-1572
002153	5305-66-102-1576
002143	5305-66-102-1577
002514	5306-66-031-5909
001754	5306-66-032-1371
000140	5306-66-090-1956
001089	5307-66-082-6871
000146	5310-00-205-8932

SERIAL No.	DSN
000226	5310-00-337-8329
000176	5310-00-543-5060
002323	5310-00-833-5856
000400	5310-66-013-0062
000345	5310-66-013-0087
000197	5310-66-014-1501
000483	5310-66-014-1501
000994	5310-66-014-1501
001678	5310-66-014-1501
001837	5310-66-014-1501
002692	5310-66-014-1501
000223	5310-66-016-2425
002318	5310-66-018-1856
000351	5310-66-031-4110
000196	5310-66-031-5622
000145	5310-66-031-5627
000092	5310-66-031-5633
002544	5310-66-031-5718
000496	5310-66-031-5893
000480	5310-66-031-5895
000976	5310-66-031-5895
001069	5310-66-031-5895
001533	5310-66-031-5895
001662	5310-66-031-5895
002142	5310-66-031-5895
000180	5310-66-031-5896
000484	5310-66-031-5896
000937	5310-66-031-5896
000970	5310-66-031-5896
001065	5310-66-031-5896
001164	5310-66-031-5896
001616	5310-66-031-5896
001670	5310-66-031-5896
001811	5310-66-031-5896
002132	5310-66-031-5896
002694	5310-66-031-5896
000974	5310-66-031-5897
001096	5310-66-031-5897
001535	5310-66-031-5897
000499	5310-66-031-5899
002536	5310-66-031-5908
002562	5310-66-031-5911
002535	5310-66-031-5982
002524	5310-66-031-5985
002540	5310-66-031-5986
002136	5310-66-031-7984
000312	5310-66-031-8464
002575	5310-66-031-9393
001611	5310-66-031-9727
001572	5310-66-031-9730
001619	5310-66-031-9730
001565	5310-66-031-9732
001544	5310-66-031-9734
002764	5310-66-032-2514
000354	5310-66-067-7242
000193	5310-66-086-8015
000346	5310-66-086-8016
000363	5310-66-086-8017
000344	5310-66-086-8018
000497	5310-66-086-8018
001814	5310-66-086-8084
002542	5310-66-086-8086
000101	5310-66-090-1951
000102	5310-66-090-1952
000117	5310-66-090-1954

LAMSON PARAGON FORMALINER PARAFLO NV 88320

SERIAL No.	DSN
000116	5310-66-090-1955
000359	5310-99-943-6075
000455	5310-99-943-6075
000726	5310-99-943-6075
000936	5310-99-943-6075
000969	5310-99-943-6075
001163	5310-99-943-6075
001615	5310-99-943-6075
001660	5310-99-943-6075
001749	5310-99-943-6075
001810	5310-99-943-6075
002131	5310-99-943-6075
002526	5310-99-943-6075
002693	5310-99-943-6075
002760	5310-99-943-6075
000433	5310-99-943-6079
002543	5310-99-943-6080
002577	5310-99-943-6082
000453	5310-99-944-5616
001157	5310-99-944-5616
001600	5310-99-944-5616
001752	5310-99-944-5616
002098	5310-99-944-5616
002135	5310-99-944-5616
000498	5310-99-946-9795
000980	5310-99-946-9795
001574	5310-99-946-9795
001610	5310-99-946-9795
002757	5310-99-946-9795
000305	5310-99-971-3720
000479	5310-99-971-3720
000972	5310-99-971-3720
001060	5310-99-971-3720
001534	5310-99-971-3720
001631	5310-99-971-3720
001657	5310-99-971-3720
001762	5310-99-971-3720
002094	5310-99-971-3720
002096	5310-99-971-3720
002141	5310-99-971-3720
002516	5310-99-971-3720
001084	5315-00-823-8740
001674	5315-00-823-8740
002107	5315-66-031-5639
000990	5315-66-031-7989
002557	5315-66-031-9394
001082	5315-66-031-9513
001561	5315-66-031-9513
001558	5315-66-031-9726
001744	5315-66-086-8080
000234	5320-00-117-6939
000502	5320-00-256-1953
000239	5320-66-031-5617
000227	5325-00-505-4798
002322	5325-66-063-9625
000449	5330-00-187-3614
002563	5330-00-187-3614
002538	5330-00-983-7786
002561	5330-00-984-5667
000309	5330-66-013-5786
002517	5330-66-013-6057
000490	5330-66-017-2150
002571	5330-66-017-2150
000257	5330-66-018-8705
002576	5330-66-018-9273

SERIAL No.	DSN
000152	5330-66-025-2669
000349	5330-66-031-3882
000348	5330-66-031-3885
000350	5330-66-031-4100
000142	5330-66-031-5626
000099	5330-66-031-5634
000141	5330-66-031-5634
000083	5330-66-031-5635
000298	5330-66-031-7986
000311	5330-66-031-7988
002522	5330-66-031-7997
000494	5330-66-056-1217
000401	5330-66-056-1779
000500	5330-66-063-2706
002519	5330-66-082-6872
000107	5330-66-090-1953
000220	5330-66-102-1571
000221	5340-00-056-2523
000501	5340-00-205-5159
001676	5340-66-019-5410
001007	5340-66-019-6130
001066	5340-66-019-6130
001015	5340-66-019-6132
000303	5340-66-026-0780
000238	5340-66-031-5616
000320	5340-66-031-5636
000978	5340-66-031-7985
001064	5340-66-031-7992
001035	5340-66-031-7999
000729	5340-66-031-9415
001663	5340-66-031-9415
002534	5340-66-032-1455
002137	5340-66-043-9699
002129	5340-66-043-9832
000398	5340-66-048-8243
000233	5340-66-049-7774
002795	5340-66-060-4226
001161	5340-66-082-6606
001159	5340-66-082-6607
001095	5340-66-082-6877
001750	5340-66-086-8082
001759	5340-66-086-8083
001816	5340-66-086-8085
001032	5340-66-102-1573
002148	5340-66-102-1574
002152	5340-66-102-1575
000343	5355-66-031-3883
000147	5355-66-031-8458
002559	5355-66-031-8458
002527	5355-66-032-1453
002556	5355-66-067-7089
000353	5360-66-031-4101
000095	5360-66-031-5625
000183	5360-66-031-5631
002582	5360-66-031-9412
002584	5360-66-031-9413
001166	5360-66-031-9725
000397	5360-66-048-8244
002688	5360-66-052-5458
000982	5360-66-060-4225
002533	5365-00-200-5234
000258	5365-00-200-6707
002690	5365-00-598-1269
001602	5365-00-663-1245
001528	5365-00-819-0088

SERIAL No.	DSN
002580	5365-00-819-0088
000153	5365-66-031-5623
001621	5365-66-031-5910
001017	5365-66-031-5989
002521	5365-66-031-9392
001543	5365-66-031-9733
001815	5365-66-032-1328
000256	5365-66-032-6276
002321	5365-66-063-9624
002532	5365-66-067-7240
002704	5365-66-082-6372
002709	5365-66-082-6373
002710	5365-66-082-6374
002719	5365-66-082-6375
001194	5365-66-082-6376
001666	5365-66-082-6673
001090	5365-66-082-6674
001094	5365-66-082-6675
001085	5365-66-082-6676
001195	5365-66-082-6966
001196	5365-66-082-6967
001073	5365-66-086-8789
001086	5365-66-086-8795
000179	5365-66-090-1706
000342	5805-66-031-3881
000356	5805-66-031-3884
000360	5805-66-032-0502
002552	5805-66-086-8928
001189	5820-66-025-8901
001168	5820-66-025-8905
001605	5820-66-025-9755
001758	5820-66-025-9760
000445	5820-66-026-3311
000444	5820-66-026-3312
000442	5820-66-026-3313
000441	5820-66-026-3314
000440	5820-66-026-3315
000439	5820-66-026-3316
000436	5820-66-026-6275
001672	5820-66-027-0555
000438	5820-66-027-1428
000431	5820-66-027-1429
001737	5820-66-027-1432
001738	5820-66-027-1433
001740	5820-66-027-1434
001739	5820-66-027-1435
001741	5820-66-027-1436
001746	5820-66-027-1437
002590	5820-66-027-5297
002591	5820-66-028-3927
000313	5820-66-031-8467
000503	5820-66-032-0503
000448	5820-66-032-0509
001205	5820-66-032-0797
001151	5820-66-032-1322
002583	5820-66-032-1331
001673	5820-66-032-1334
002581	5820-66-032-1540
002585	5820-66-032-1541
000988	5820-66-032-1553
000999	5820-66-032-1554
001622	5820-66-032-3313
000248	5820-66-032-3840
002569	5820-66-040-7280
000429	5820-66-040-7281

SERIAL No.	DSN
000437	5820-66-040-7284
001158	5820-66-040-7285
001185	5820-66-040-7286
001188	5820-66-040-7287
001172	5820-66-040-7289
000428	5820-66-040-7290
002104	5820-66-040-7292
002105	5820-66-040-7293
002101	5820-66-040-7294
002310	5820-66-040-7295
002092	5820-66-040-7296
002597	5820-66-052-5328
002687	5820-66-054-1578
000446	5820-66-060-1622
000434	5820-66-060-1623
000435	5820-66-060-1624
001206	5820-66-060-1625
001239	5820-66-060-1634
002758	5820-66-060-1769
000425	5820-66-060-4307
000020	5820-66-067-7091
001570	5820-66-086-8742
001571	5820-66-086-8743
001743	5820-66-086-8744
001760	5820-66-086-8745
001747	5820-66-086-8780
002139	5820-66-086-8781
000997	5820-66-086-8787
001074	5820-66-086-8790
001076	5820-66-086-8791
001079	5820-66-086-8792
001081	5820-66-086-8793
001675	5820-66-086-8793
001083	5820-66-086-8794
001180	5820-66-086-8798
001530	5820-66-086-8863
001734	5820-66-086-8871
002150	5820-66-086-8881
002689	5820-66-086-8932
000143	5820-66-089-5736
000103	5820-66-090-1842
000097	5820-66-090-1850
000100	5820-66-090-1853
000139	5820-66-090-1856
000108	5820-66-090-1869
002099	5820-66-093-7802
001031	5820-66-097-0310
000929	5905-00-007-3808
001246	5905-00-007-3808
001455	5905-00-007-3808
001492	5905-00-007-3808
002186	5905-00-007-3808
002359	5905-00-007-3808
002406	5905-00-007-3808
001789	5905-00-116-8554
002412	5905-00-126-6703
000878	5905-00-139-2138
002360	5905-00-139-2138
000548	5905-00-150-5256
000662	5905-00-150-5256
002386	5905-00-150-5256
000554	5905-00-184-7705
000623	5905-00-184-7705
000651	5905-00-184-7705
000755	5905-00-184-7705

SERIAL No.	DSN
000800	5905-00-184-7705
000868	5905-00-184-7705
001446	5905-00-184-7705
001796	5905-00-184-7705
002447	5905-00-184-7705
001806	5905-00-197-4197
000803	5905-00-223-2610
000857	5905-00-223-2610
001462	5905-00-223-2610
002250	5905-00-223-2610
002356	5905-00-223-2610
002438	5905-00-223-2610
000658	5905-00-233-6815
000750	5905-00-233-6815
001247	5905-00-233-6815
000550	5905-00-240-2726
000683	5905-00-240-2726
000819	5905-00-240-2726
001454	5905-00-240-2726
001792	5905-00-240-2726
001797	5905-00-240-2726
001883	5905-00-240-2726
002196	5905-00-240-2726
002241	5905-00-240-2726
002357	5905-00-240-2726
002473	5905-00-240-2726
002792	5905-00-240-2726
000533	5905-00-240-2728
000614	5905-00-240-2728
000668	5905-00-240-2728
000756	5905-00-240-2728
000928	5905-00-240-2728
000938	5905-00-240-2728
001258	5905-00-240-2728
001709	5905-00-240-2728
001824	5905-00-240-2728
002183	5905-00-240-2728
002239	5905-00-240-2728
002335	5905-00-240-2728
002395	5905-00-240-2728
000541	5905-00-240-2734
000615	5905-00-240-2734
001489	5905-00-240-2734
001707	5905-00-240-2734
001862	5905-00-240-2734
002190	5905-00-240-2734
002225	5905-00-240-2734
002345	5905-00-240-2734
002446	5905-00-240-2734
000534	5905-00-240-2736
000601	5905-00-240-2736
000657	5905-00-240-2736
000737	5905-00-240-2736
000790	5905-00-240-2736
000869	5905-00-240-2736
000941	5905-00-240-2736
001250	5905-00-240-2736
002380	5905-00-240-2736
002444	5905-00-240-2736
002578	5905-00-240-2736
000626	5905-00-240-2745
000749	5905-00-240-2745
001249	5905-00-240-2745
001791	5905-00-240-2745
002240	5905-00-240-2745

SERIAL No.	DSN
000549	5905-00-240-2746
000598	5905-00-240-2746
000681	5905-00-240-2746
000824	5905-00-240-2746
001711	5905-00-240-2746
001803	5905-00-240-2746
002347	5905-00-240-2746
002476	5905-00-240-2746
000551	5905-00-240-2747
000747	5905-00-240-2747
000825	5905-00-240-2747
001710	5905-00-240-2747
001795	5905-00-240-2747
001825	5905-00-240-2747
001869	5905-00-240-2747
002480	5905-00-240-2747
000661	5905-00-240-2748
000802	5905-00-240-2748
001292	5905-00-240-2748
001445	5905-00-240-2748
002191	5905-00-240-2748
002401	5905-00-240-2748
002453	5905-00-240-2748
002470	5905-00-240-2748
000543	5905-00-240-2749
000925	5905-00-240-2749
001823	5905-00-240-2749
001876	5905-00-240-2749
002660	5905-00-240-2749
000622	5905-00-240-7947
002804	5905-00-240-7949
000544	5905-00-240-7950
000806	5905-00-240-7950
000816	5905-00-240-7950
000931	5905-00-240-7950
001123	5905-00-240-7950
000547	5905-00-240-7954
000605	5905-00-240-7954
000659	5905-00-240-7954
000754	5905-00-240-7954
000815	5905-00-240-7954
000930	5905-00-240-7954
001487	5905-00-240-7954
001706	5905-00-240-7954
001793	5905-00-240-7954
001884	5905-00-240-7954
002379	5905-00-240-7954
002626	5905-00-240-7954
001817	5905-00-240-7955
000525	5905-00-240-7958
000762	5905-00-240-7958
002255	5905-00-240-7958
002363	5905-00-240-7958
000810	5905-00-240-7960
000552	5905-00-240-7979
000667	5905-00-240-7979
000871	5905-00-240-7979
001871	5905-00-240-7979
002256	5905-00-240-7979
002391	5905-00-240-7979
002456	5905-00-240-7979
002629	5905-00-240-7979
002657	5905-00-240-7979
000539	5905-00-240-7980
000612	5905-00-240-7980

LAMSON PARAGON FORMALINER PARAFLO J9320

SERIAL No.	DSN
000718	5905-00-240-7980
001860	5905-00-240-7980
002455	5905-00-240-7980
002659	5905-00-240-7980
000538	5905-00-240-7982
000714	5905-00-240-7982
000743	5905-00-240-7982
002350	5905-00-240-7982
001501	5905-00-240-7983
002180	5905-00-240-7983
002344	5905-00-240-7983
002387	5905-00-240-7983
002482	5905-00-240-7983
000555	5905-00-249-1286
000675	5905-00-249-1286
000932	5905-00-249-1286
001504	5905-00-249-1286
001861	5905-00-249-1286
002254	5905-00-249-1286
002403	5905-00-249-1286
000625	5905-00-400-9612
000686	5905-00-400-9612
000765	5905-00-400-9612
000812	5905-00-400-9612
001863	5905-00-400-9612
002355	5905-00-400-9612
002661	5905-00-400-9612
001819	5905-00-401-8683
000527	5905-00-413-1029
000748	5905-00-413-1029
001874	5905-00-413-1029
002477	5905-00-413-1029
000674	5905-00-419-0189
000866	5905-00-419-0189
001244	5905-00-419-0189
001457	5905-00-419-0189
001705	5905-00-419-0189
000540	5905-00-419-3949
000652	5905-00-419-3949
000727	5905-00-419-3949
000818	5905-00-419-3949
002408	5905-00-419-3949
002464	5905-00-419-3949
000535	5905-00-422-5186
000669	5905-00-422-5186
000745	5905-00-422-5186
000791	5905-00-422-5186
000863	5905-00-422-5186
000942	5905-00-422-5186
002253	5905-00-422-5186
002440	5905-00-422-5186
000602	5905-00-436-8557
000542	5905-00-437-6298
000600	5905-00-437-6298
000655	5905-00-437-6298
000944	5905-00-437-6298
002192	5905-00-437-6298
002441	5905-00-437-6298
002627	5905-00-437-6298
000619	5905-00-437-6300
000530	5905-00-438-0505
000654	5905-00-438-0505
000795	5905-00-438-0505
000870	5905-00-438-0505
001828	5905-00-438-0505

SERIAL No.	DSN
002385	5905-00-438-0505
002481	5905-00-438-0505
000532	5905-00-450-2827
001461	5905-00-450-2827
000596	5905-00-450-8530
000713	5905-00-450-8530
000537	5905-00-458-9263
000593	5905-00-458-9263
000678	5905-00-458-9263
000793	5905-00-458-9263
000860	5905-00-458-9263
001495	5905-00-458-9263
001804	5905-00-458-9263
002257	5905-00-458-9263
002393	5905-00-458-9263
000820	5905-00-458-9267
001460	5905-00-458-9267
002200	5905-00-458-9267
002462	5905-00-458-9267
001808	5905-00-482-0505
002228	5905-00-482-0505
002802	5905-00-482-0505
000526	5905-00-490-0246
000618	5905-00-490-0246
000753	5905-00-490-0246
000853	5905-00-490-0246
000926	5905-00-490-0246
001877	5905-00-490-0246
002656	5905-00-490-0246
000531	5905-00-491-2638
000682	5905-00-491-2638
000757	5905-00-491-2638
001704	5905-00-491-2638
001794	5905-00-491-2638
002352	5905-00-491-2638
002388	5905-00-491-2638
002478	5905-00-491-2638
002251	5905-00-496-7860
001822	5905-00-498-5683
001914	5905-00-498-5683
001948	5905-00-498-5683
001983	5905-00-498-5683
002021	5905-00-498-5683
002057	5905-00-498-5683
000738	5905-00-498-5684
000873	5905-00-498-5684
000924	5905-00-498-5684
002199	5905-00-563-1595
002232	5905-00-563-1595
002339	5905-00-563-1595
002400	5905-00-563-1595
002442	5905-00-563-1595
000719	5905-00-717-6590
002801	5905-00-717-6590
000744	5905-00-721-0009
000939	5905-00-723-9282
001456	5905-00-763-9754
001490	5905-00-763-9754
002184	5905-00-938-7571
001880	5905-00-984-3914
000536	5905-01-009-0175
000606	5905-01-009-0175
000933	5905-01-009-0175
001256	5905-01-009-0175
001449	5905-01-009-0175

SERIAL No.	DSN
002484	5905-01-009-0175
000609	5905-01-050-4106
000672	5905-01-050-4106
001128	5905-01-050-4106
000679	5905-66-030-3597
001800	5905-66-032-1327
000943	5905-66-032-1330
001875	5905-66-032-1333
002568	5905-66-032-1450
002567	5905-66-032-1451
002201	5905-66-042-4275
001124	5905-66-102-0563
001500	5905-66-102-0563
000723	5905-66-102-0581
001491	5905-99-013-5694
001497	5905-99-013-5936
000529	5905-99-013-5938
001488	5905-99-013-6063
000710	5905-99-013-6239
000927	5905-99-013-6239
001248	5905-99-013-6239
001820	5905-99-013-6239
002474	5905-99-013-6239
001827	5910-00-007-2000
002466	5910-00-007-2003
000616	5910-00-010-8159
000666	5910-00-010-8159
000712	5910-00-010-8159
000799	5910-00-010-8159
002362	5910-00-010-8159
002803	5910-00-010-8159
000611	5910-00-010-8422
000664	5910-00-010-8422
001788	5910-00-010-8422
001873	5910-00-010-8422
000676	5910-00-029-4852
002409	5910-00-029-4852
002479	5910-00-082-4787
001122	5910-00-111-4811
001291	5910-00-111-4811
002252	5910-00-111-4811
002450	5910-00-111-4811
001121	5910-00-113-5499
002234	5910-00-113-5499
002288	5910-00-113-5499
002411	5910-00-113-5499
002445	5910-00-113-5499
000604	5910-00-113-9817
000746	5910-00-113-9817
000792	5910-00-113-9817
000858	5910-00-113-9817
000916	5910-00-113-9817
001802	5910-00-113-9817
002247	5910-00-113-9817
001799	5910-00-124-0032
002789	5910-00-124-0032
002437	5910-00-134-0628
002457	5910-00-139-6699
002227	5910-00-142-6950
002384	5910-00-189-4248
000594	5910-00-450-8641
000610	5910-00-450-8641
000660	5910-00-450-8641
000711	5910-00-450-8641
000788	5910-00-450-8641

SERIAL No.	DSN
000867	5910-00-450-8641
000903	5910-00-450-8641
000906	5910-00-450-8641
001243	5910-00-450-8641
001452	5910-00-450-8641
001818	5910-00-450-8641
001887	5910-00-450-8641
002185	5910-00-450-8641
002588	5910-00-450-8641
002793	5910-00-450-8641
002800	5910-00-450-8641
002452	5910-00-486-6772
000595	5910-00-495-0042
000759	5910-00-495-0042
001826	5910-00-495-0042
001864	5910-00-495-0042
002233	5910-00-495-0042
002443	5910-00-495-0042
002448	5910-00-583-4891
002748	5910-00-714-5964
001913	5910-00-724-7357
002258	5910-00-809-4701
001910	5910-00-811-4992
001956	5910-00-811-4992
001985	5910-00-811-4992
002713	5910-00-811-4992
001181	5910-00-812-8531
000915	5910-00-817-4722
001865	5910-00-880-7239
002026	5910-00-889-4564
002237	5910-00-904-3654
002236	5910-00-905-4097
002472	5910-00-905-4097
000911	5910-00-924-3984
000620	5910-00-926-9784
000685	5910-00-926-9784
000907	5910-00-926-9784
002182	5910-00-926-9784
002287	5910-00-926-9784
001241	5910-00-928-3235
000556	5910-00-935-3511
000656	5910-00-935-3511
000805	5910-00-935-3511
000861	5910-00-935-3511
002662	5910-00-935-3511
002378	5910-00-936-1521
001981	5910-00-950-0382
001918	5910-00-950-0385
001950	5910-00-950-0385
002023	5910-00-950-0385
002404	5910-00-951-8036
000557	5910-00-952-9006
000648	5910-00-952-9006
001253	5910-00-952-9006
001496	5910-00-952-9006
002353	5910-00-952-9006
002407	5910-00-952-9006
002655	5910-00-952-9006
001952	5910-00-984-7051
002059	5910-00-984-7051
000920	5910-01-004-3291
001879	5910-01-004-3291
000874	5910-01-057-0370
002394	5910-14-300-2115
000673	5910-14-318-1531

SERIAL No.	DSN
000720	5910-17-037-3598
002392	5910-66-016-8236
002235	5910-66-025-7799
001679	5910-66-028-4082
002383	5910-66-030-6175
001922	5910-66-031-5646
001989	5910-66-031-5646
001920	5910-66-031-5647
002018	5910-66-031-5647
001917	5910-66-031-5649
001945	5910-66-031-5649
001957	5910-66-031-5841
002024	5910-66-031-5841
002054	5910-66-031-5841
001953	5910-66-031-5842
002029	5910-66-031-5842
002030	5910-66-031-5843
001986	5910-66-031-5844
001993	5910-66-031-5845
002063	5910-66-031-5845
001988	5910-66-031-5846
002065	5910-66-031-5846
001992	5910-66-031-5847
002066	5910-66-031-5848
002061	5910-66-031-5849
002707	5910-66-031-5850
002706	5910-66-031-5851
002705	5910-66-031-5852
002703	5910-66-031-5853
002718	5910-66-031-5854
002711	5910-66-031-5855
002708	5910-66-031-5856
002716	5910-66-031-5859
002714	5910-66-031-7703
000734	5910-66-031-7809
001237	5910-66-031-7809
001319	5910-66-031-7809
001361	5910-66-031-7809
001403	5910-66-031-7809
002147	5910-66-032-0505
001629	5910-66-032-1323
002181	5910-66-058-5174
002396	5910-66-058-5586
000617	5910-66-090-1084
000684	5910-66-090-1084
001127	5910-66-090-1084
001252	5910-66-090-1084
001242	5910-66-090-1087
002398	5910-66-090-1087
002798	5910-66-090-1087
002338	5910-66-090-1092
000751	5910-66-090-1093
001881	5910-66-090-1259
000764	5910-66-090-1376
001152	5910-66-090-1376
002198	5910-66-090-1376
000558	5910-66-090-1378
000733	5910-66-090-1378
001444	5910-66-090-1378
002794	5910-66-090-1378
001184	5910-66-090-1440
001259	5910-66-090-1440
000722	5910-66-090-1493
002248	5910-66-098-4630
001332	5910-66-100-5801

SERIAL No.	DSN
001374	5910-66-100-5801
001409	5910-66-100-5801
001330	5910-66-100-5802
001372	5910-66-100-5802
001418	5910-66-100-5802
001327	5910-66-100-5803
001369	5910-66-100-5803
001415	5910-66-100-5803
001262	5910-66-100-5804
000804	5910-66-100-5892
001264	5910-66-100-5892
000821	5910-66-100-5893
000877	5910-66-100-5893
000731	5910-66-100-5904
000875	5910-66-100-5904
000564	5910-66-100-5931
000739	5910-66-100-5944
001329	5910-66-100-5948
001371	5910-66-100-5948
001417	5910-66-100-5948
000566	5910-66-100-5982
000742	5910-66-100-5982
001267	5910-66-100-5982
000721	5910-66-100-5990
000794	5910-66-100-5992
000563	5910-66-100-5994
000822	5910-66-100-5994
000826	5910-66-100-8042
000813	5910-66-100-8044
000603	5910-66-100-8045
000761	5910-66-100-8045
000862	5910-66-100-8045
000801	5910-66-100-8049
001334	5910-66-100-8268
001376	5910-66-100-8268
001411	5910-66-100-8268
001336	5910-66-100-8269
001378	5910-66-100-8269
000811	5910-66-100-8270
000735	5910-66-100-8273
000798	5910-66-100-8273
001821	5910-66-100-8273
001337	5910-66-100-8274
001379	5910-66-100-8274
001414	5910-66-100-8274
001266	5910-66-100-8276
001263	5910-66-100-8277
001265	5910-66-100-8279
001328	5910-66-100-8300
001370	5910-66-100-8300
001416	5910-66-100-8300
001331	5910-66-100-8302
001373	5910-66-100-8302
001419	5910-66-100-8302
001333	5910-66-100-8303
001375	5910-66-100-8303
001410	5910-66-100-8303
001335	5910-66-100-8305
001377	5910-66-100-8305
001412	5910-66-100-8305
001413	5910-66-100-8305
001658	5915-00-846-0451
000730	5915-00-846-0453
001655	5915-00-846-0453
001681	5915-66-028-5964

LAWSON PARAGON FORMALINER PARAFLO 3320

SERIAL No.	DSN
001238	5920-00-942-9927
001451	5920-00-942-9927
001493	5920-00-942-9927
000292	5930-00-729-8291
002574	5930-66-028-3928
002595	5930-66-028-5956
002598	5930-66-028-5957
000295	5930-66-031-8462
000293	5930-66-031-8463
001186	5930-66-032-0798
001187	5930-66-032-0799
002695	5930-66-032-1546
002698	5930-66-032-1547
002712	5930-66-032-1549
002717	5930-66-032-1550
002715	5930-66-032-1551
001092	5930-66-032-1753
000194	5930-66-051-7009
000395	5930-66-054-6929
002315	5930-66-065-1261
002314	5930-66-065-1262
002311	5930-66-065-1263
002313	5930-66-065-1264
002316	5930-66-065-1265
002312	5930-66-065-1266
002592	5930-66-102-0575
002586	5930-66-102-0576
002103	5930-66-104-6407
001176	5935-00-021-2120
002594	5935-00-021-2120
001785	5935-00-054-5853
001001	5935-00-057-2690
001671	5935-00-057-2690
001835	5935-00-172-1097
000967	5935-00-807-3454
001013	5935-00-807-3455
002548	5935-00-823-0667
001005	5935-00-840-7683
001009	5935-00-856-2659
002579	5935-00-856-2659
001668	5935-00-885-6508
001831	5935-00-885-6508
000310	5935-00-892-9817
000365	5935-00-892-9817
000391	5935-00-892-9817
001173	5935-00-904-1380
001667	5935-00-904-1380
001061	5935-00-925-1786
001003	5935-00-937-6278
000966	5935-00-952-8198
001097	5935-00-952-8198
001014	5935-00-963-0124
002549	5935-00-997-8026
000613	5935-66-031-7818
000653	5935-66-031-7818
000922	5935-66-031-7818
000528	5935-66-031-8459
000599	5935-66-031-8459
000680	5935-66-031-8459
000752	5935-66-031-8459
000789	5935-66-031-8459
000864	5935-66-031-8459
000910	5935-66-031-8459
001812	5935-66-032-1326
002560	5935-66-032-1445

SERIAL No.	DSN
002564	5935-66-032-1446
002593	5935-66-032-1448
001016	5935-66-032-1456
000443	5935-66-032-1760
001012	5935-66-032-1763
001020	5935-66-032-1773
001008	5935-66-032-1774
002518	5935-66-048-1524
000307	5935-66-054-1175
000306	5935-66-054-1176
002545	5935-66-054-1951
001010	5935-66-086-8785
002546	5935-66-086-8926
000975	5935-66-103-3458
000546	5935-99-108-3668
000621	5935-99-108-3668
000665	5935-99-108-3668
000024	5935-99-117-0007
000986	5935-99-194-9325
002766	5940-66-018-1891
000486	5940-66-018-4333
000178	5940-66-018-7314
000368	5940-66-018-7314
001018	5940-66-018-7314
001154	5940-66-018-7314
001614	5940-66-018-7314
001661	5940-66-018-7314
002566	5940-66-018-7314
002765	5940-66-018-7314
002531	5940-66-030-8561
000495	5940-66-041-6207
002100	5940-66-041-6207
000485	5940-66-060-4308
000487	5940-66-060-4310
000491	5940-66-060-4311
002541	5940-66-086-8910
000830	5940-99-142-3263
002067	5940-99-142-3263
001071	5940-99-195-4815
001923	5940-99-946-7554
001958	5940-99-946-7554
001995	5940-99-946-7554
002031	5940-99-946-7554
001296	5940-99-952-6793
001450	5940-99-952-6793
001498	5940-99-952-6793
002336	5940-99-952-6793
002664	5940-99-952-6793
000829	5940-99-955-5811
000880	5940-99-955-5811
001260	5940-99-955-5811
001295	5940-99-955-5811
001320	5940-99-955-5811
001362	5940-99-955-5811
001420	5940-99-955-5811
001459	5940-99-955-5811
001494	5940-99-955-5811
001712	5940-99-955-5811
001834	5940-99-955-5811
002231	5940-99-955-5811
002622	5940-99-955-5811
002663	5940-99-955-5811
002747	5940-99-955-5811
002791	5940-99-955-5811
001120	5940-99-956-9738

SERIAL No.	DSN
002244	5940-99-956-9738
002351	5940-99-956-9738
002405	5940-99-956-9738
002436	5940-99-956-9738
002799	5940-99-956-9738
000987	5945-99-643-6570
002259	5950-00-027-0485
000827	5950-66-030-0240
002465	5950-66-031-8219
001405	5950-66-031-8222
001404	5950-66-031-8223
001402	5950-66-031-8224
001408	5950-66-031-8225
001407	5950-66-031-8226
001406	5950-66-031-8227
001236	5950-66-031-8228
002055	5950-66-031-8230
002064	5950-66-031-8231
000185	5950-66-031-8454
002022	5950-66-031-9795
002056	5950-66-031-9795
002058	5950-66-031-9796
001949	5950-66-031-9797
001994	5950-66-031-9797
002060	5950-66-031-9798
002020	5950-66-031-9799
002028	5950-66-032-0300
002019	5950-66-032-0301
001915	5950-66-032-0302
001946	5950-66-032-0302
002025	5950-66-032-0303
001982	5950-66-032-0304
001916	5950-66-032-0305
001991	5950-66-032-0305
001984	5950-66-032-0306
001911	5950-66-032-0307
001987	5950-66-032-0308
001947	5950-66-032-0309
001955	5950-66-032-0310
001954	5950-66-032-0311
001951	5950-66-032-0312
001912	5950-66-032-0700
001921	5950-66-032-0701
001919	5950-66-032-0702
001886	5950-66-032-0703
001870	5950-66-032-0704
001805	5950-66-032-0706
002658	5950-66-032-0708
000763	5950-66-032-0709
000741	5950-66-032-0710
000740	5950-66-032-0711
000553	5950-66-032-0712
000823	5950-66-032-0713
000545	5950-66-032-0714
000809	5950-66-032-0715
000807	5950-66-032-0716
000817	5950-66-032-0717
000814	5950-66-032-0718
000859	5950-66-032-0719
002700	5950-66-032-1545
001091	5950-66-032-1752
000879	5950-66-032-1781
000923	5950-66-032-1783
001885	5950-66-032-1783
000934	5950-66-032-1787

SERIAL No.	DSN
000940	5950-66-032-1788
000565	5950-66-032-1789
000876	5950-66-032-1792
001257	5950-66-032-1795
001453	5950-66-032-1795
002261	5950-66-032-1795
002483	5950-66-032-1795
001990	5950-66-032-3808
002027	5950-66-032-3809
002062	5950-66-032-3812
001230	5950-66-032-3813
001229	5950-66-032-3814
001231	5950-66-032-3815
001235	5950-66-032-3816
000607	5950-66-032-3833
002805	5950-66-041-6174
002797	5950-66-041-6175
002806	5950-66-041-6176
001204	5950-66-060-1626
001203	5950-66-060-1627
001202	5950-66-060-1628
001201	5950-66-060-1629
001200	5950-66-060-1630
001199	5950-66-060-1631
001198	5950-66-060-1632
001197	5950-66-060-1633
001232	5950-66-060-1635
001233	5950-66-060-1636
001234	5950-66-060-1637
001240	5950-66-060-1638
001254	5950-66-060-1639
001323	5950-66-060-1672
001365	5950-66-060-1672
001293	5950-66-060-1752
001294	5950-66-060-1753
001289	5950-66-060-1754
001325	5950-66-060-1760
001367	5950-66-060-1760
001324	5950-66-060-1761
001366	5950-66-060-1761
001322	5950-66-060-1763
001364	5950-66-060-1763
001321	5950-66-060-1764
001363	5950-66-060-1764
001326	5950-66-060-1765
001368	5950-66-060-1765
000736	5950-66-060-1766
002461	5950-66-063-9800
002449	5950-66-063-9811
002459	5950-66-063-9812
002249	5950-66-065-1107
002245	5950-66-065-1108
002179	5950-66-065-1157
002286	5950-66-065-1157
000569	5950-66-082-6343
000831	5950-66-082-6343
000881	5950-66-082-6343
001228	5950-66-082-6343
001338	5950-66-082-6343
001380	5950-66-082-6343
001421	5950-66-082-6343
001924	5950-66-082-6343
001959	5950-66-082-6343
001996	5950-66-082-6343
002032	5950-66-082-6343

SERIAL No.	DSN
002068	5950-66-082-6343
000828	5950-66-086-8007
002701	5950-66-088-7040
002702	5950-66-088-7045
000559	5961-00-051-5975
000608	5961-00-051-5975
000649	5961-00-051-5975
001251	5961-00-051-5975
001790	5961-00-051-5975
002243	5961-00-051-5975
002467	5961-00-051-5975
000912	5961-00-104-9948
002246	5961-00-110-9356
002410	5961-00-239-8529
001290	5961-00-252-1309
001499	5961-00-252-1309
002469	5961-00-252-1309
002226	5961-00-400-6242
002743	5961-00-400-6242
001255	5961-00-448-5113
001447	5961-00-448-5113
002454	5961-00-448-5113
002229	5961-00-465-8169
000568	5961-00-490-0151
000663	5961-00-490-0151
000914	5961-00-490-0151
001878	5961-00-490-0151
002796	5961-00-490-0151
002230	5961-00-626-9576
001505	5961-00-814-9532
000728	5961-00-842-9864
000787	5961-00-842-9864
000854	5961-00-842-9864
001129	5961-00-842-9864
001245	5961-00-842-9864
001486	5961-00-842-9864
002189	5961-00-842-9864
002224	5961-00-842-9864
002346	5961-00-842-9864
002377	5961-00-842-9864
002439	5961-00-842-9864
002631	5961-00-842-9864
002654	5961-00-842-9864
002745	5961-00-842-9864
000908	5961-00-852-3602
000677	5961-00-853-2601
002599	5961-00-880-4783
001866	5961-00-880-7078
002475	5961-00-902-7478
001801	5961-00-905-4815
002471	5961-00-905-4815
000567	5961-00-911-6185
000591	5961-00-911-6185
000670	5961-00-911-6185
000808	5961-00-911-6185
000855	5961-00-911-6185
000904	5961-00-911-6185
002242	5961-00-911-6185
002354	5961-00-911-6185
002623	5961-00-911-6185
001807	5961-00-913-8441
000597	5961-00-925-3777
000758	5961-00-925-3777
000909	5961-00-925-3777
000913	5961-00-925-3777

SERIAL No.	DSN
001502	5961-00-925-3777
001829	5961-00-925-3777
001882	5961-00-925-3777
002197	5961-00-925-3777
002238	5961-00-925-3777
002358	5961-00-925-3777
002628	5961-00-925-3777
002741	5961-00-925-3777
002381	5961-00-929-2929
000918	5961-00-985-9111
002195	5961-00-985-9111
000561	5961-00-988-1912
000715	5961-00-988-1912
000797	5961-00-988-1912
000872	5961-00-988-1912
000921	5961-00-988-1912
001787	5961-00-988-1912
001867	5961-00-988-1912
001798	5961-00-997-1274
000562	5961-66-031-7817
000717	5961-66-032-1336
002349	5961-66-038-5107
002188	5961-66-050-6663
002342	5961-66-050-6663
002361	5961-66-050-6663
002389	5961-66-050-6663
000977	5961-66-054-1869
002193	5961-66-055-4855
000732	5961-66-057-9155
000917	5961-66-057-9155
002761	5961-66-060-1771
000760	5961-66-062-4264
002460	5961-66-063-9749
002458	5961-66-063-9750
002451	5961-66-063-9751
001125	5961-66-097-0309
000624	5961-99-037-2903
000671	5961-99-037-2903
001786	5961-99-037-2903
001872	5961-99-037-2903
002625	5961-99-118-4907
002399	5962-00-008-6842
002390	5962-00-219-7312
002402	5962-00-251-1378
002343	5962-66-065-1142
002348	5962-66-065-1143
002337	5962-66-065-1144
000290	5965-66-031-8460
000301	5965-66-031-8461
000402	5965-66-056-1758
000297	5965-99-901-1184
000392	5965-99-901-1184
000399	5965-99-940-2368
000294	5970-66-020-3308
001755	5970-66-032-1332
002539	5970-66-032-1452
001025	5970-66-032-1761
001026	5970-66-032-1762
001542	5970-66-032-3318
001165	5970-66-032-4246
001093	5970-66-032-4247
000492	5970-66-060-4313
002319	5970-66-065-1507
002320	5970-66-065-1508
000047	5985-66-031-8440

LAMSON PARAGON FORMALINER PARAFLO VSW 69320

SERIAL No.	DSN
000048	5985-66-031-8441
000049	5985-66-031-8442
000050	5985-66-031-8443
000051	5985-66-031-8444
000052	5985-66-031-8445
000053	5985-66-031-8446
000188	5985-66-031-8455
000182	5985-66-031-8457
002537	5985-66-032-1449
000054	5985-66-034-9442
000019	5985-66-067-7090
000189	5985-66-090-1858
000314	5995-66-028-9541
000366	5995-66-032-0501
001736	5995-66-032-1324
000390	5995-66-032-6278
002762	5995-66-048-1523
001063	5995-66-048-8605
001062	5999-00-021-2118
000919	5999-00-909-3157
002194	5999-00-909-3157
000352	5999-66-031-3880
000560	5999-66-031-4291
000592	5999-66-031-4291
000650	5999-66-031-4291
000687	5999-66-031-4291
000716	5999-66-031-4291
000796	5999-66-031-4291
000856	5999-66-031-4291
000905	5999-66-031-4291
001126	5999-66-031-4291
001261	5999-66-031-4291
001448	5999-66-031-4291
001503	5999-66-031-4291
001833	5999-66-031-4291
001868	5999-66-031-4291
002187	5999-66-031-4291
002262	5999-66-031-4291
002341	5999-66-031-4291
002382	5999-66-031-4291
002468	5999-66-031-4291
002624	5999-66-031-4291
002742	5999-66-031-4291
001832	5999-66-031-4292
002744	5999-66-031-4292
000181	5999-66-031-8453
001024	5999-66-032-1457
000724	5999-66-032-3325
000403	5999-66-056-1250
002630	5999-66-060-1775
000488	5999-66-060-4309
000493	5999-66-060-4312
001618	5999-66-086-8868
000106	5999-66-090-1854
000098	5999-66-090-1855
000184	5999-66-090-1857
000481	6135-66-060-4316
000025	6145-66-090-1643
002520	6210-66-032-4015
002523	6685-66-056-1190
000266	8040-66-021-2410
000267	8040-66-089-5343
000265	8135-66-089-5345
000264	8305-66-026-7820
000105	9905-66-016-3531

SERIAL No.	DSN
000296	9905-66-016-3531
001190	9905-66-016-3531
001665	9905-66-016-3531
001742	9905-66-016-3531
001029	9905-66-016-3533
002573	9905-66-016-3534
002554	9905-66-051-7564
000021	9905-66-067-7296
000022	9905-66-067-7296

SERIAL No.	DSN

CHAPTER 1

SECTION 3

GROUP INDEX

REPAIR PARTS SCALE
22113

GROUP INDEX

GROUP	DESIGNATION	PAGE
A	RADIO SET PRC-F3	1
AA	ANTENNA AS-FI, 8 SECTION 8 FT	3
AB	COUPLER, ANTENNA, CU-F1A1	4
ABA	BODY ASSEMBLY	5
ABB	BASE CAP ASSEMBLY	7
ABC	COUPLER ASSEMBLY	8
AC	CASE ASSEMBLY, TRANSIT, CY-F1A1	10
AD	MICROPHONE, DYNAMIC, M-F1	13
AE	KEY, TELEGRAPH, LIGHTWEIGHT, KY-F1A1	15
AF	HANDSET, H-F2	17
B	RECEIVER-TRANSMITTER, RADIO, RT-F2/PRC-F3	18
CA	CASE, RECEIVER-TRANSMITTER	20
DA	CIRCUIT CARD ASSEMBLY, MARKED 3CB1 (RESISTORS, TRANSFORMERS, CONSECTORS)	22
EA	CIRCUIT CARD ASSEMBLY, MARKED 4CB1	25
FA	CIRCUIT CARD ASSEMBLY, MARKED 5CB1	27
GA	CIRCUIT CARD ASSEMBLY, MARKED 6CB1	29
HA	CIRCUIT CARD ASSEMBLY, MARKED 8CB1	32
JA	CIRCUIT CARD ASSEMBLY, MARKED 9CB1	35
KA	CIRCUIT CARD ASSEMBLY, MARKED 14CB1	37
LA	RECEIVER-TRANSMITTER SUB-ASSEMBLY	40
LB	GEAR BRACKET ASSEMBLY (2nd STAGE)	44

REPAIR PARTS SCALE

22113

GROUP INDEX

GROUP	DESIGNATION	PAGE
LC	CIRCUIT CARD ASSEMBLY, MARKED 11-1CB1	47
MA	AMPLIFIER, RADIO FREQUENCY, CIRCUIT 1	48
MB	CIRCUIT CARD ASSEMBLY MARKED 1-1CB1	52
MBA	CIRCUIT CARD ASSEMBLY MARKED 1-8CB1	55
MC	CIRCUIT CARD ASSEMBLY, MARKED 1-3CB1	56
MD	CIRCUIT CARD ASSEMBLY, MARKED 1-2CB1	58
ME	CIRCUIT CARD ASSEMBLY, MARKED 1-4CB1	60
MF	CIRCUIT CARD ASSEMBLY, MARKED 1-5CB1	62
MG	CIRCUIT CARD ASSEMBLY, MARKED 1-6CB1	64
MH	GEAR, ASSEMBLY AMPLIFIER, GEAR MECHANISM, PLATE MOUNTED	65
MJ	GEAR MECHANISM ASSEMBLY	68
NA	CONTROL, RECEIVER-TRANSMITTER, CIRCUIT 2	70
NB	CIRCUIT CARD ASSEMBLY, MARKED 2CB1	72
OA	AMPLIFIER, RADIO FREQUENCY, CIRCUIT 7	73
OB	CIRCUIT CARD ASSEMBLY, MARKED 7 1CR1	75
OC	CIRCUIT CARD ASSEMBLY, MARKED 7-2CB1	78
OD	CIRCUIT CARD ASSEMBLY, MARKED 7-3CB1	80
OE	CIRCUIT CARD ASSEMBLY, MARKED 7-4CB1	81
OF	CIRCUIT CARD ASSEMBLY, MARKED 7-5CB1	82
OG	CIRCUIT CARD ASSEMBLY, MARKED 7-6CB1	83
OH	CIRCUIT CARD ASSEMBLY, MARKED 7-7CB1	84
PA	SYNTHESISER ELECTRICAL FREQUENCY	84

REPAIR PARTS SCALE

22113

GROUP INDEX

GROUP	DESIGNATION	PAGE
PB	CHASSIS-SYNTHESISER ASSEMBLY	87
PC	CIRCUIT CARD ASSEMBLY, MARKER 10-4CB1	89
PD	CIRCUIT CARD ASSEMBLY, MARKED 10-6CB1	93
PE	CIRCUIT CARD ASSEMBLY, MARKED 10-5CB1	95
PF	SWITCH COOM ASSEMBLY	96
PG	CIRCUIT CARD ASSEMBLY, MARKED 10-1CB1	97
PH	CIRCUIT CARD ASSEMBLY, MARKED 10-2CB1	99
PJ	CIRCUIT CARD ASSEMBLY, MARKED 10-3CB1	101
QA	RECEIVER-TRANSMITTER SUB ASSEMBLY	104
QB	CIRCUIT CARD ASSEMBLY, MARKED 12-5CB1	109
QC	CIRCUIT CARD ASSEMBLY, MARKED 12-2CB1	110
QD	SWITCH ASSEMBLY, ANTENNA TUNING	111
QE	CIRCUIT CARD ASSEMBLY, MARKED 12-6CB1	113
RA	POWER AMPLIFIER COMPONENT PLATE ASSEMBLY	114
RB	CIRCUIT CARD ASSEMBLY, MARKED 18-1CB1	115

CHAPTER 2

SECTION 4

REPAIR PARTS SCALE TEXT

GROUP A RPS 22113

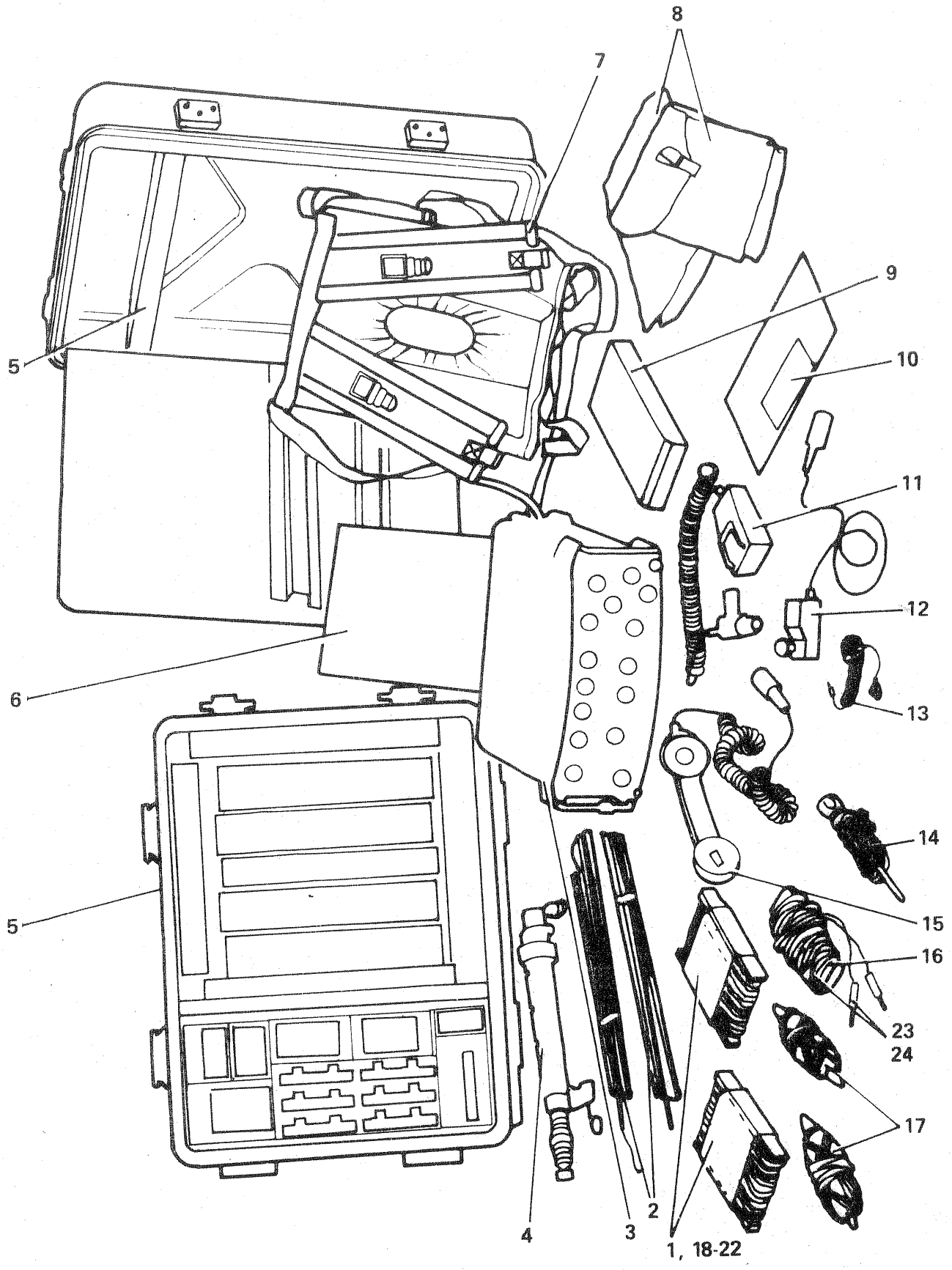

RADIO SET, PRC-F3

SERIAL NUMBER	GROUP & ITEM No.	DESIGNATION	MANUFACTURERS CODE	MANUFACTURERS PART No.	NO OFF	EXP. CLASS	LEVEL OF REPAIR
1	2	3	4	5	6	7	8
000001	A	RADIO SET PRC-F3					
000002	001	ANTENNA (CONSISTS OF SERIALS 19 TO 23 INCL)			2		
000003	002	ANTENNA, AS-FI (REFER SERIALS 46 TO 59)			2		
000004	003	RECEIVER-TRANSMITTER, RADIO, RT-F2/PRC-F3 (REFER SERIALS 424 TO 455)			1		
000005	004	COUPLER ANTENNA, CU-F1A1 (REFER SERIALS 80 TO 84)			1		
000006	005	CASE ASSEMBLY, TRANSIT, CY-F1A2 (REFER SERIALS 218 TO 270)			1		
000007	006	USER HANDBOOK, RADIO SET PRC-F1, RADIO SET PRC-F3, RADIO SET GRC-F2			1		
000008	007	HARNESS ELECTRICAL EQUIPMENT ST-F1			1		
000009	008	BAG, ACCESSORY, CW-F2			2		
000010	009	BATTERY, STORAGE, BB-F1			6		
000011	010	CARD INSTRUCTION, OPERATORS, RADIO SET PRC-F3			1		
000012	011	MICROPHONE, DYNAMIC M-F1 (REFER SERIALS 289 TO 320)			1		
000013	012	KEY, TELEGRAPH, LIGHTWEIGHT KY-F1A1 (REFER SERIALS 340 TO 368)			1		
000014	013	HEADSET, ELECTRICAL, LIGHT-WEIGHT, HI-FI			1		
000015	014	COUNTER POISE, ANTENNA			1		
000016	015	HANDSET, H-F2 (REFER SERIALS 389 TO 403)			1		
000017	016	CABLE ASSEMBLY, RADIO FREQUENCY, CG-F4 (FOR BREAK-DOWN REFER SERIALS 23 AND 24)			1		
000018	017	HALYARD, ANTENNA, W/100 FT GREEN CORD AND BOBBIN			2		
000019	018	REEL, CABLE, FOR ONE HALF OF DI-POLE	X2813	ADEW67-1125ISSUE1	1	X	UFB
000020	019	ANTENNA ELEMENT, BRASS WIRE, 20- 0.005 IN.BUNCHED, BLACK PVC COVER WITH RED PLASTISOL BEADS AT 1 FT INTERVALS, 114 FT LONG	Z2813	ADEW67-1134ISSUE2	1	X	UFB

SERIAL NUMBER	GROUP & ITEM No.	DESIGNATION	MANUFACTURERS		NO OFF	EXP. CLASS	LEVEL OF REPAIR
			CODE	PART No.			
1	2	3	4	5	6	7	8
000021	020	PLATE, IDENTIFICATION, ALUMINIUM, PRESSURESENSITIVE, INSCRIBED ANTENNA AS-F2 FREQ CHART, MATT GOLD LETTERS ON BLACK BACKGROUND, 3-11/32 IN. LG BY 3 IN. W BY 0.003 IN. THK	Z2813	ADEW67-1052ISSUE1	1	X	UFB
000022	021	PLATE, IDENTIFICATION, ALUMINIUM, PRESSURESENSITIVE, INSCRIBED ANTENNA AS-F2 FREQ CHART, MATT GOLD LETTERS ON BLACK BACKGROUND, 3-11/32 IN. LG BY 3 IN. W BY 0.003 IN. THK	Z2813	ADEW67-1052ISSUE1	1	X	UFB
000023	022	CORD, NYLON, BRAIDED, GREEN, 1/16 IN. DIA, 125 LB MIN BREAKING STRENGTH (31 FT LG)	Z0083	450	1	X	UFB
000024	023	PLUG, TIP, BANANA, 4 MM, RED	U0154	L1716ARED	2	X	UFB
000025	024	CABLE, RADIO FREQUENCY, 70/80 OHMS, TWIN .036, PVC INS, BLACK	Z0478	74D2/01	1	X	UFB

GROUP AA RPS 22113

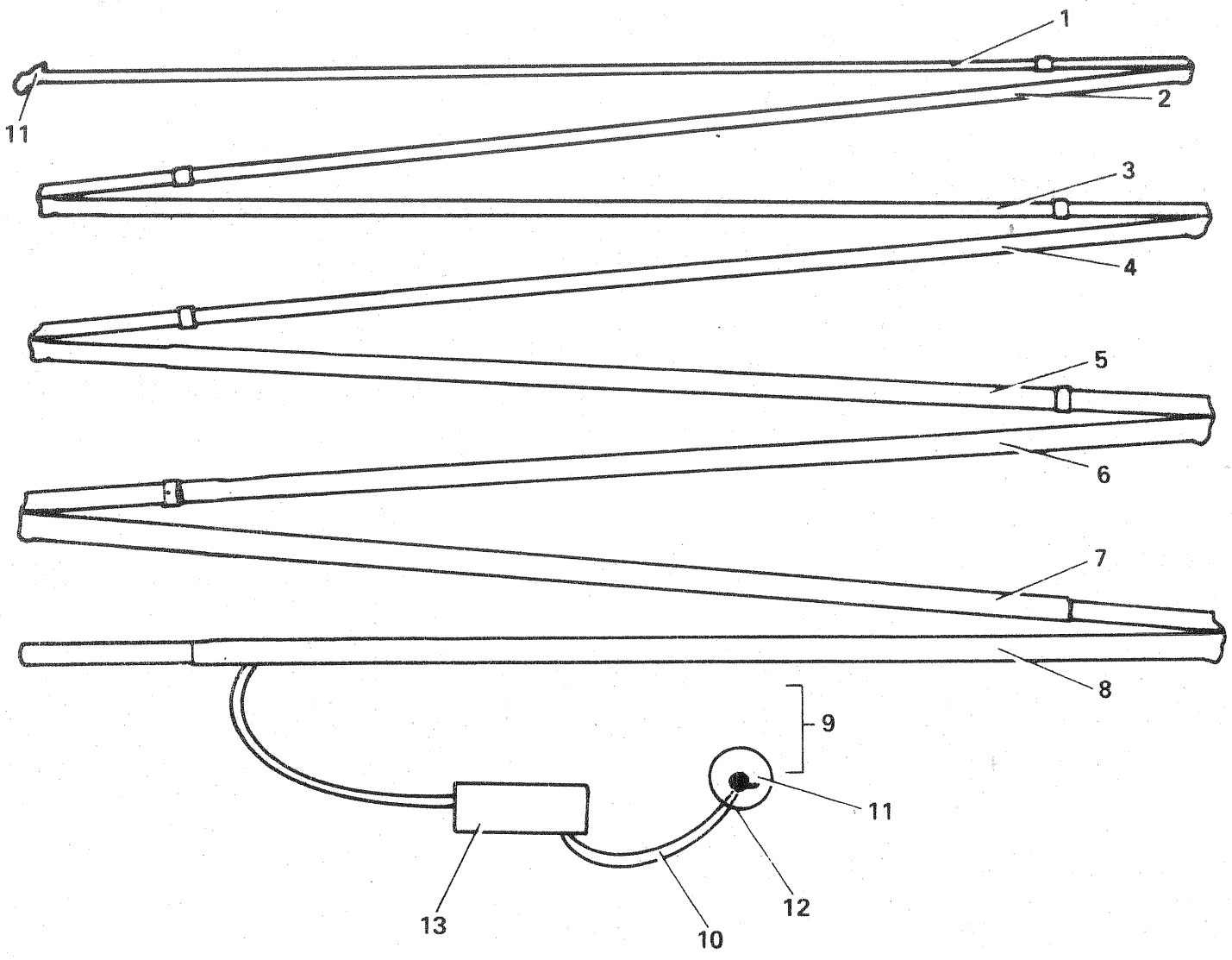

ANTENNA, AS-F1

SERIAL NUMBER	GROUP & ITEM No.	DESIGNATION	MANUFACTURERS		NO O.FF	EXP. CLASS	LEVEL OF REPAIR
			CODE	PART No.			
1	2	3	4	5	6	7	8
000046	AA	ANTENNA, AS-F1, 8 SECTION, 8 FT					
000047	001	ANTENNA, ELEMENT, SECT A	Z2813	ADEW67-1055SEDCAISSUE4	1	X	UFB
000048	002	ANTENNA ELEMENT, SECT B	Z2813	ADEW67-1055SECBISSUE4	1	X	UFB
000049	003	ANTENNA, ELEMENT, SECT 'C'	Z2813	ADEW67-1055SECCISSUE4	1	X	UFB
000050	004	ANTENNA ELEMENT, SECT D	Z2813	ADEW67-1055SECDISSUE4	1	X	UFB
000051	005	ANTENNA, ELEMENT, SECT E	Z2813	ADEW67-1055SECEISSUE4	1	X	UFB
000052	006	ANTENNA ELEMENT, SECT F	Z2813	ADEW67-1055SECFISSUE4	1	X	UFB
000053	007	ANTENNA ELEMENT, SECT G	Z2813	ADEW67-1055SECGISSUE4	1	X	UFB
000054	008	ANTENNA, ELEMENT, SECT H	Z2813	ADEW67-1055SECHISSUE4	1	X	UFB
000055	009	CORD ASSEMBLY (COMPRISES SERIALS 56 TO 59 INCL)			1		
000056	010	CORD, NYLON, BRAIDED, GREEN, 1/16 IN. DIA, 125 LB MIN BREAKING STRENGTH	Z0083	450	1	X	UFB
000057	011	EYELET, BRASS			2		
000058	012	BUTTON, 3/4 IN OD, BLACK PLASTIC			1		
000059	013	FERRULE, CORD ASSEMBLY	Z2813	ADEW67-1143ISSUE1	1	X	UFB

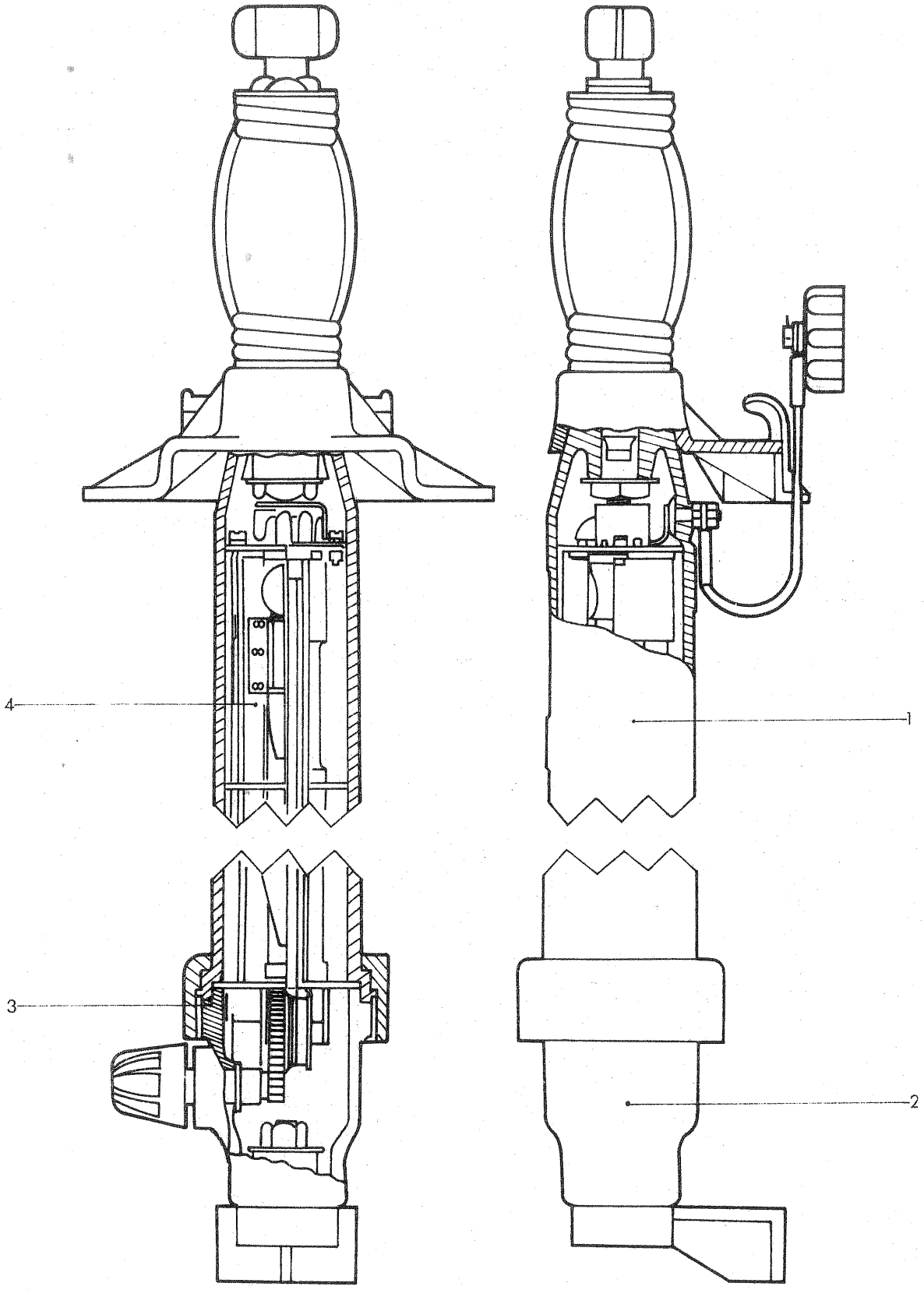

COUPLER, ANTENNA - CU-F1A1

SERIAL NUMBER	GROUP & ITEM No.	DESIGNATION	MANUFACTURERS		NO OFF	EXP. CLASS	LEVEL OF REPAIR
			CODE	PART No.			
1	2	3	4	5	6	7	8
000080	AB	COUPLER, ANTENNA, CU-F1A1					
000081	001	BODY ASSEMBLY (REFER SERIALS 91 TO 117)			1		
000082	002	BASE CAP ASSEMBLY (REFER SERIALS 138 TO 153)			1		
000083	003	PACKING, PREFORMED, SYNTHETIC RUBBER, 1.455 IN ID BY 1.593 IN OD BY 0.070 IN THK	Z2813	ADEW67-1490ISSUE2	1	X	UFB
000084	004	COUPLER ASSEMBLY (REFER SERIALS 174 TO 197)			1		

GROUP ABA 22113

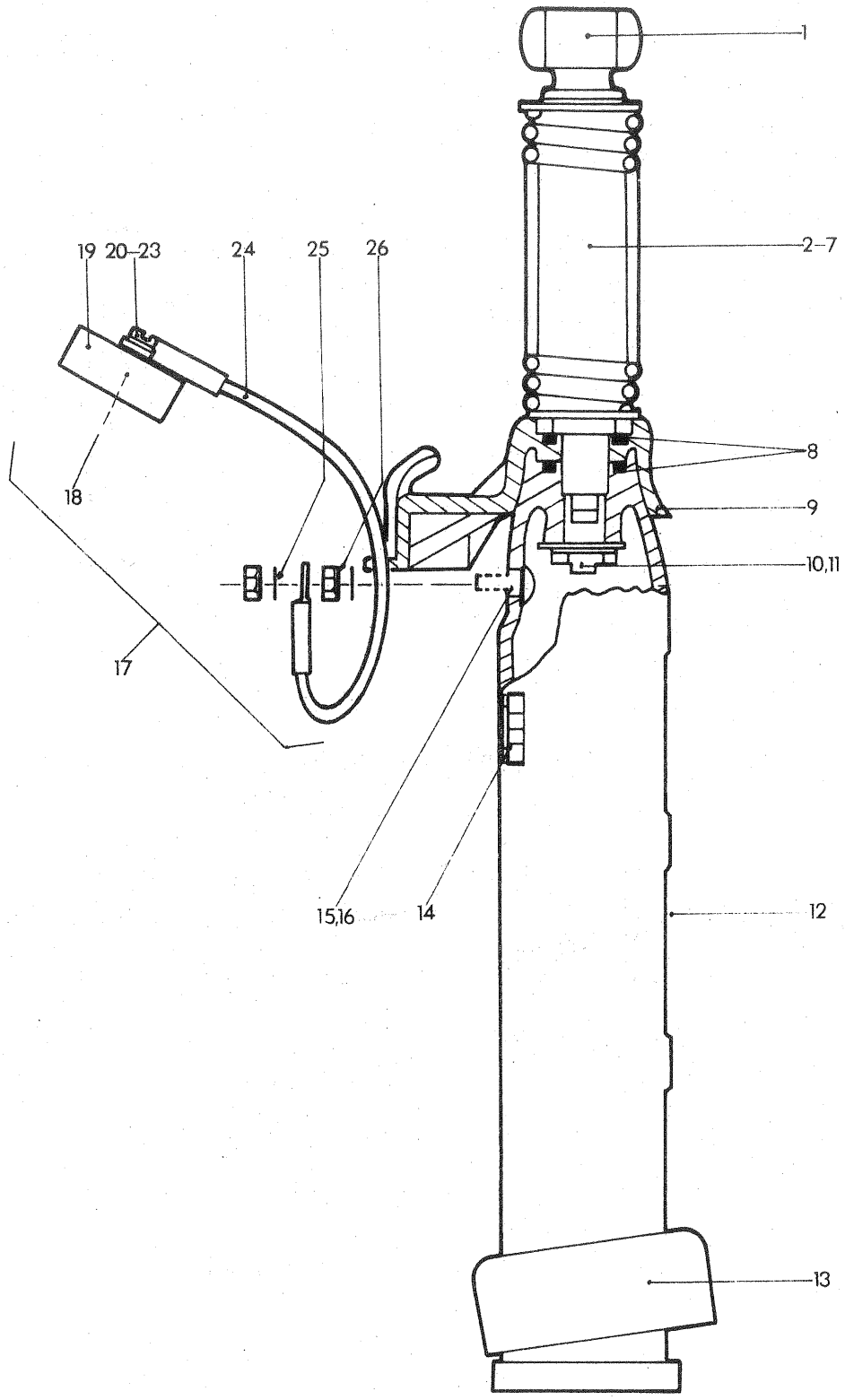

BODY ASSEMBLY

SERIAL NUMBER	GROUP & ITEM No.	DESIGNATION	MANUFACTURERS CODE	MANUFACTURERS PART No.	NO OFF	EXP. CLASS	LEVEL OF REPAIR
1	2	3	4	5	6	7	8
000091	ABA	BODY ASSEMBLY					
000092	001	NUT, COUPLING, ANTENNA, UNEF, 2B, BRASS, W/WINGS, PAINTED OLIVE DRAB, 1/2 IN.	Z2813	ADEW67-1031ISSUE3	1	X	UFB
000093	002	SPRING ASSEMBLY (COMPRISES SERIALS 94 TO 98 INCL)			1		
000094	003	LEAD, ELECTRICAL, ANTENNA COUPLER			1		
000095	004	SPRING, ANTENNA MOUNT	Z2813	ADEW67995 ISSUE 2	1	X	FB
000096	005	TUBE PTFE, .120 ID BY .015 WALL RED, 2-3/8 IN LG			1		
000097	006	ADAPTER, ANTENNA TO ANTENNA, SPRING ASSEMBLY BASE	Z2813	ADEW123-90ISSUE1	1	X	FB
000098	007	CONTACT, ELECTRICAL	Z2813	ADEW67-1718ISSUE3	1	X	FB
000099	008	PACKING, PREFORMED, SYNTHETIC RUBBER, 0.489 IN ID BY 0.629 IN OD BY 0.070 IN THK	Z0020	ADEW67-1489ISSUE2	2	X	FB
000100	009	PLATE, MOUNTING, ANTENNA COUPLER, UPPER	Z2813	ADEW123-94 ISSUE 2	1	X	FB
000101	010	WASHER, FLAT, rd, polycarbonate, 0.339in id, 0.625in od by 0.035in thk	Z2813	ADEW123-95 ISSUE 1	1	X	FB
000102	011	NUT, PLAIN, BARREL, UNF, 2B, BRASS, DULL NICKEL PLATED, 1/4IN THD SIZE, 0.375IN O/A LG, 0.338IN DIA, 0.155IN HD H	Z2813	ADEW123-96 ISSUE 1	1	X	FB
000103	012	HOUSING, MECHANICAL DRIVE, ANTENNA COUPLER DRIVEN END	Z2813	ADEW123-93ISSUE1	1	X	FB
000104	013	PACKING NUT, MOULDED, 2IN DIA BY 1 3/162N H, 1-3/42N 12 UN THD	Z2813	ADEW67-1028ISSUE2	1	X	FB
000105	014	PLATE, MODIFICATION RECORD ALUMINIUM 1-3/16IN LG BY 9/16IN W, PRESSURE SENSITIVE	Z2813	TSEW77-5ISSUE2	1	X	FB
000106	015	CONTACT, ELECTRICAL, CABLE ASSEMBLY MOUNTING AND CONTAC	Z2813	ADEW123-105ISSUE1	1	X	FB
000107	016	PACKING, PREFORMED, SYNTHETIC RUBBER, 0.166IN ID, 0.250IN OD, BY 0.044IN THK	Z2813	ADEW123-97ISSUE1	1	X	FB
000108	017	LEAD, ELECTRICAL, ANTENNA COUPLER TO SET (COMPRISES SERIALS 109 TO 115)	Z2813	ADEW123-106ISSUE2	1	X	FB
000109	018	CONTACT RECEIVER			1		
000110	019	NUT MOULDED			1		

LAMSON PARAGON FORMALINER F W 69319

00834

SERIAL NUMBER	GROUP & ITEM No.	DESIGNATION	MANUFACTURERS		NO OFF	EXP. CLASS	LEVEL OF REPAIR
			CODE	PART No.			
1	2	3	4	5	6	7	8
000111	020	CIRCLIP			1		
000112	021	TERMINAL, LUG, UTILUX TYPE H1295, GOLD PLATED			1		
000113	022	WASHER, PLATED			1		
000114	023	SCREW 6 BA BY 1/4 IN LG			1		
000115	024	LEAD GROUP			1		
000116	025	WASHER, FLAT, RD, BRASS, GOLD PLATED, 0.126IN ID, 0.276IN OD BY 0.018IN THK, (NO 6 BA SCREW SIZE)	Z2813	ADEW123-100ISSUE1	2	X	UFB
000117	026	NUT, PLAIN, HEXAGON, BA, BRASS, GOLD PLATED, NO 6 THD SIZE, 0.189IN W A/F, 0.105IN THK	Z2813	ADEW123-99 ISSUE 1	2	X	UFB

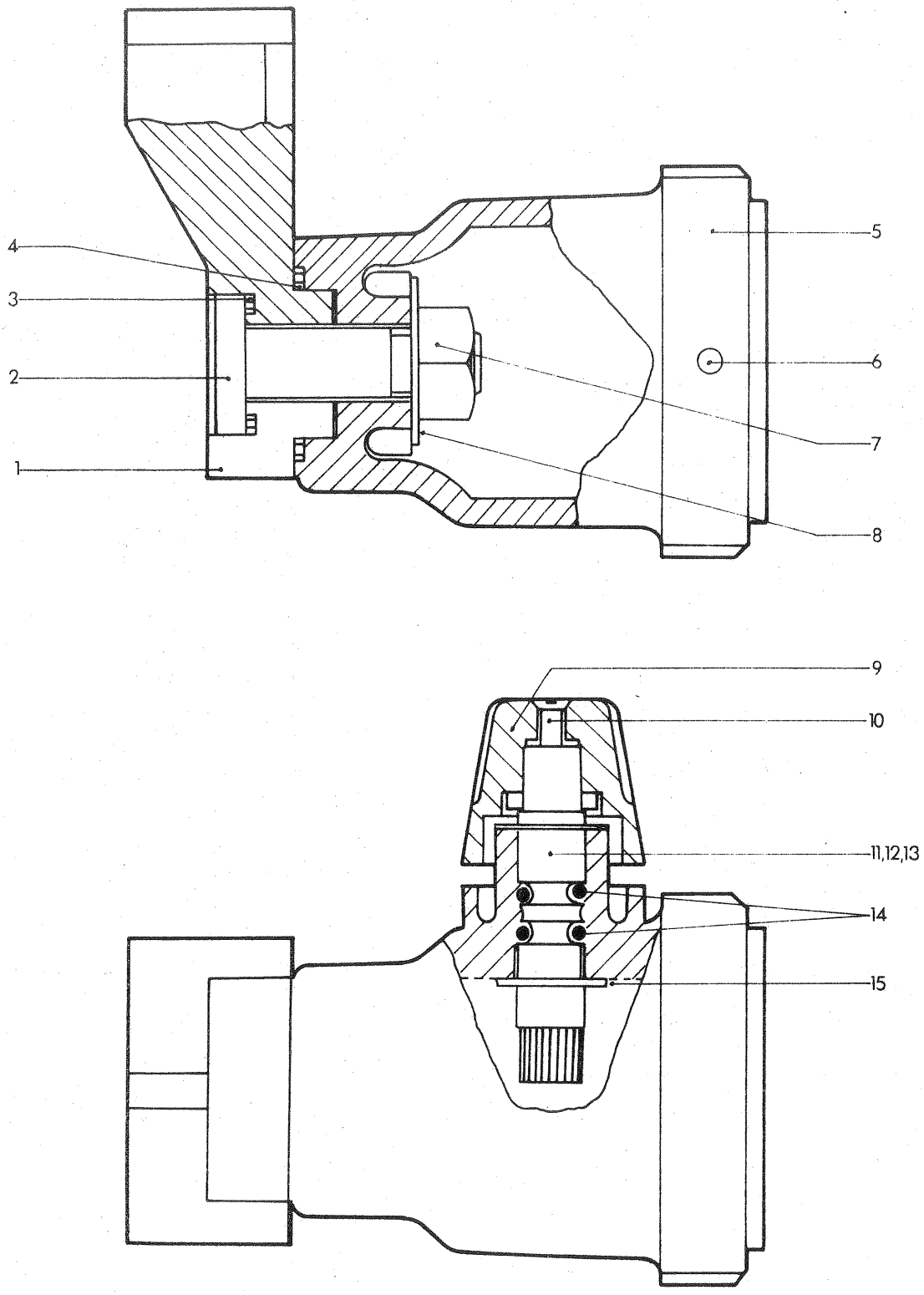

BASE CAP ASSEMBLY

SERIAL NUMBER	GROUP & ITEM No.	DESIGNATION	MANUFACTURERS		NO OFF	EXP. CLASS	LEVEL OF REPAIR
			CODE	PART No.			
1	2	3	4	5	6	7	8
000138	ABB	BASE CAP ASSEMBLY					
000139	001	PLATE, MOUNTING, ANTENNA COUPLER, LOWER	Z2813	ADEW123-113ISSUE1	1	X	FB
000140	002	BOLT, TEE HEAD, UNF, 2A, CRES, FLAT HD, 5/16 IN. BY 1.078 IN. LG, 0.437 IN. THD LGIN. THD LG	Z2813	ADEW123-112ISSUE1	1	X	FB
000141	003	PACKING, PREFORMED, SYNTHETIC RUBBER, 0.489 IN ID BY 0.629 IN OD BY 0.070 IN THK	Z0020	ADEW67-1489ISSUE2	1	X	FB
000142	004	PACKING, PREFORMED, SYNTHETIC RUBBER, 0.671 IN ID LG 0.811 IN OD BY 0.070 IN THK	Z0020	ADEW67-1483	1	X	FB
000143	005	HOUSING, MECHANICAL DRIVE, ANTENNA COUPLER DRIVE END	Z2813	ADEW123-110ISSUE1	1	X	FB
000144	006	PIN LOCKING			1		
000145	007	NUT, PLAIN, HEXAGON, UNF, 2B, CRES, PASSIVATED, 5/16 IN.	Z2813	ADEW67-1495ISSUE3	1	X	FB
000146	008	WASHER, FLAT, CRES, RD, 0.314IN ID 1/2IN OD BY 0.052IN THK	82423	51768	1	X	FB
000147	009	KNOB, TUNING AND VOLUME	Z2813	TSEW8-22ISSUE1	1	X	UFB
000148	010	SCREW, MACHINE, BA, CRES, FLAT CSK HD, SLOT DRIVE, MATT BLACK PAINTED, NO. 6 BY 3/8 IN. LG	Z2813	ADEW67-1496ISSUE2	1	X	UFB
000149	011	GEARSHAFT, SPUR, W/PIN	Z2813	ADEW67-1917ISSUE3	1	X	FB
000150	012	SPINDLE DRIVE			1		
000151	013	PIN			1		
000152	014	PACKING, PREFORMED, RUBBER 0.176 IN. ID BY 5/16 IN. OD BY 0.70 IN. THK	Z1272	050-034	2	X	FB
000153	015	RING, RETAINING STEEL, EXTERNAL TYPE, 5/16IN. SHAFT SIZE,	Z0635	ASC08213	1	X	FB

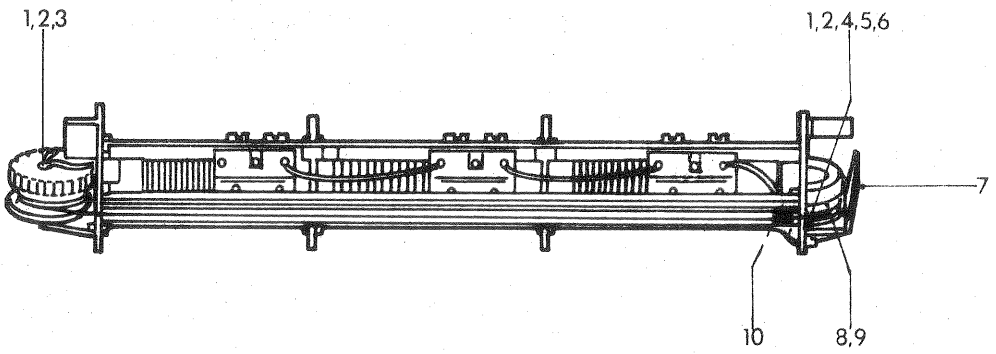

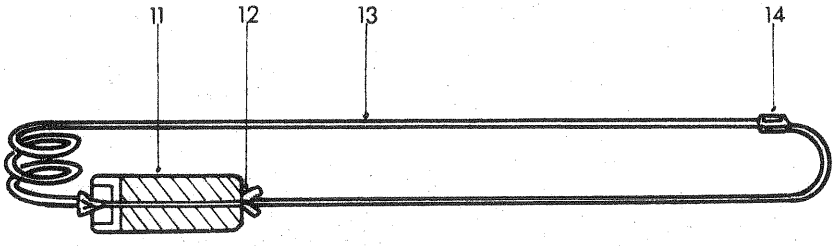

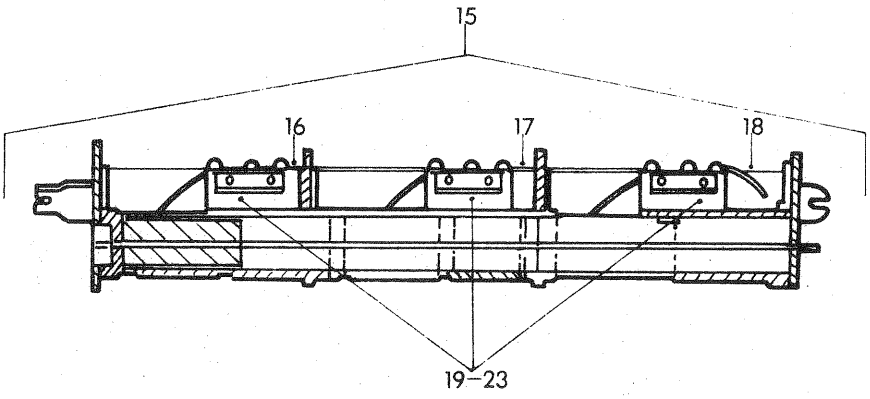

COUPLER ASSEMBLY

SERIAL NUMBER	GROUP & ITEM No.	DESIGNATION	MANUFACTURERS		NO OFF	EXP. CLASS	LEVEL OF REPAIR
			CODE	PART No.			
1	2	3	4	5	6	7	8
000174	ABC	COUPLER ASSEMBLY					
000175	001	SCREW, MACHINE, BA, BRASS, CHEESE HD, SLOTTED, DULL NICKEL PLATED, NO 8 BY 1/4IN LG	Z0544	B85	2	X	FB
000176	002	WASHER, LOCK, SPRING STEEL, SINGLE TURN, RECT SECTION, CAD PLATED W/CHROMATE, NO. 2 UN SIZE	K1334	BSSP47	2	X	FB
000177	003	GEAR, SPUR CORD DRIVE	Z2813	ADEW67-10181SS2	1	X	FB
000178	004	TERMINAL, LUG, 0.398 IN. LG, BY 0.172 IN. W	Z0220	H290	2	X	FB
000179	005	SPACER, SLEEVE	Z2813	ADEW123121 ISSUE 1	1	X	FB
000180	006	NUT, PLAIN, HEXAGON, BA, BRASS, DULL NICKEL PLATED, NO 8	Z0544	B85	2	X	FB
000181	007	CONTACT, ELECTRICAL, 1.226IN LG BY 0.5IN W BY 0.012IN THK	Z2813	ADEW67-1023ISSUE2	1	X	FB
000182	008	ROCKER, TENSION	Z2813	ADEW67-1020ISSUE2	1	X	FB
000183	009	SPRING, HELICAL, COMPRESSION, STEEL, CAD PLATED, 1/2IN FREE LG BY 0.187IN OD, 26 SWG	Z2813	ADEW671022 ISSUE 2	1	X	FB
000184	010	CONTACT, ELECTRICAL	Z2813	ADEW123-1201SSUE1	1	X	FB
000185	011	CORE, ADJUSTABLE TUNING	Z2813	ADEW67-1025ISSUE3	1	X	FB
000186	012	WEDGE, TOOTHPICK			2		
000187	013	CORD, FIBROUS GLASS, B184 HT (30 INS REQD)	Z2813	ADEW67-1482	1	X	FB
000188	014	BEAD, INDICATOR, YELLOW	Z2813	ADEW67-1024ISSUE2	1	X	FB
000189	015	COUPLER, ANTENNA, SUBASSEMBLY (INCLUDES SERIALS 190, 191, 192)	Z2813	ADEW123-115ISSUE1	1	X	FB
000190	016	FORMER WINDING ASSEMBLY "C"			1		
000191	017	FORMER WINDING ASSEMBLY "B"			1		
000192	018	FORMER WINDING ASSEMBLY "A"			1		
000193	019	NUT, PLATE, MICRO SWITCH	Z2813	ADEW67-1491ISSUE1	3	X	FB
000194	020	SWITCH, SENSITIVE	36497	V42T2-1394	3	X	FB
000195	021	SCREW, MACHINE, BA, BRASS, FLAT FIL HD, SLOT DRIVE, NO. 8 BY 7/16 IN. LG	K0100	COM427-19	6	X	FB
000196	022	WASHER, LOCK, PHOSPHOR BRONZE, SINGLE TURN, SQUARE SECTION, NO 8 BA BOLT SIZE	K7766	BS2061	6	X	FB

LAMSON PARAGON FORMALINER P/L V 69319
UU835

SERIAL NUMBER	GROUP & ITEM No.	DESIGNATION	MANUFACTURERS		NO OFF	EXP. CLASS	LEVEL OF REPAIR
			CODE	PART No.			
1	2	3	4	5	6	7	8
000197	023	WASHER FLAT RD BRASS NICKEL PLATED SMALL 8BA OR UN SCREW SIZE	Z0544	B85	6	X	FB

GROUP AC RPS 22113

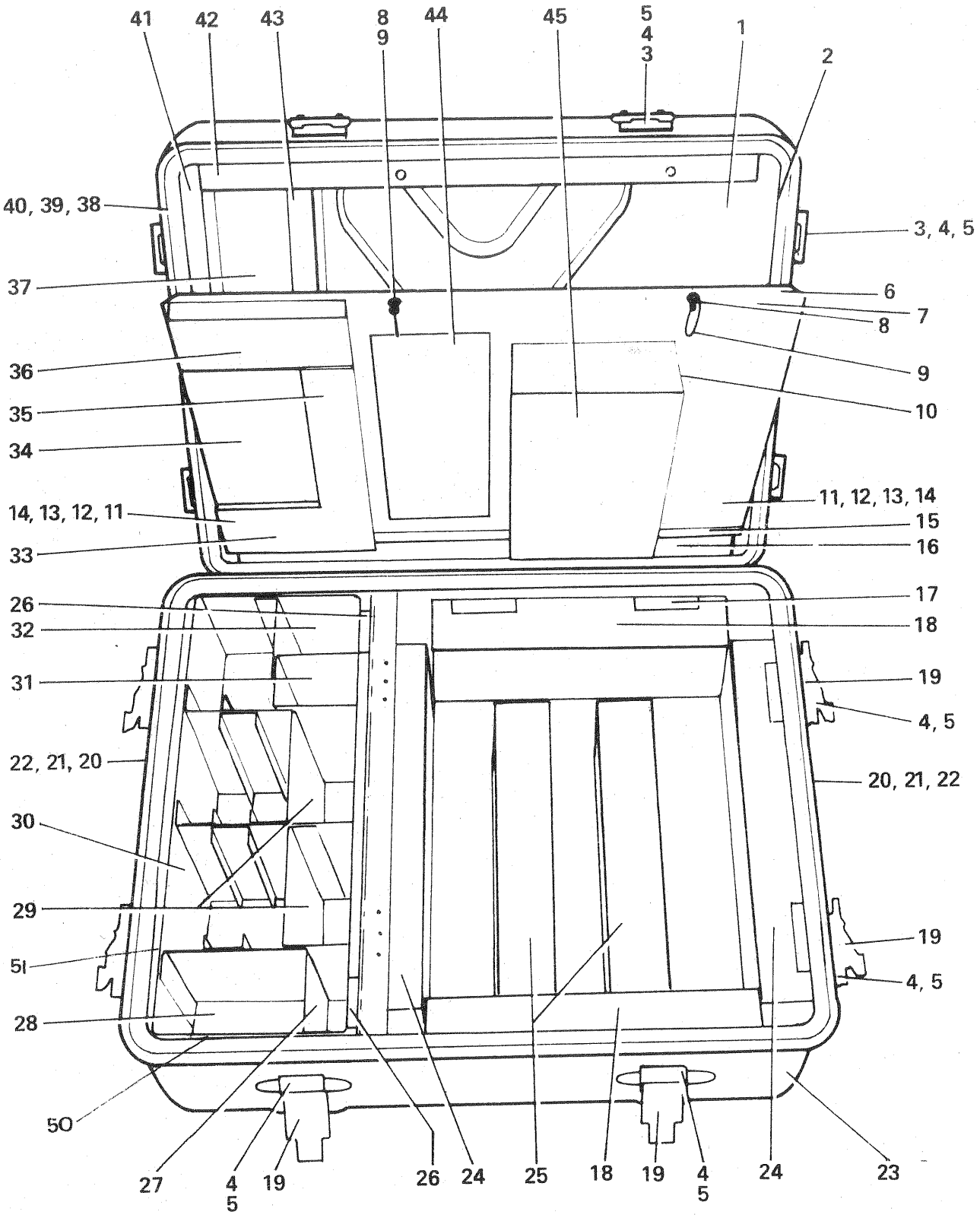

CASE ASSEMBLY TRANSIT, CY-F1A2

SERIAL NUMBER	GROUP & ITEM No.	DESIGNATION	MANUFACTURERS CODE	MANUFACTURERS PART No.	NO OFF	EXP. CLASS	LEVEL OF REPAIR
1	2	3	4	5	6	7	8
000218	AC	CASE ASSEMBLY, TRANSIT, CYF1A1					
000219	001	LID ASSEMBLY (FOR TRANSIT CASE CY-F1A1, COMPRISES SERIALS 220 TO 224 AND 255 TO 261 INCL)			1		
000220	002	GASKET, SYNTHETIC RUBBER, 22.248 O/A LG, BY 17.031 IN O/A W, BY 0.313 IN THK	Z2813	ADEW67-1652ISSUE2	1	X	FB
000221	003	CATCH, CLAMPING	96214	537732-1	8	X	FB
000222	004	SCREW, MACHINE, UNF, 2A, STEEL, CHEESE HD, CAD PLATED, NO 10 BY 5/16IN LG	80204	B18-6-3	56	X	FB
000223	005	WASHER, LOCK STEEL, SHAKEPROOF, CAD PLATED, INTERNAL TYPE 12, 3/16IN, NO2BA OR NO10UN SCREW SIZE	Z0088	1210	56	X	FB
000224	006	INNER LID ASSEMBLY (COMPRISES SERIALS 225, 226 227, 228, 233 AND 234)			1		
000225	007	PANEL LID			1		
000226	008	PUSH ON NUT, STEEL, CAD PLATED W/CHROMATE, FOR 1/4 IN. DIA MATING PART, 29/64 IN. OD, 1/64 IN. THK, W/MULTIPLE LOCKING TABS	71286	2600LW	2	X	FB
000227	009	RECEPTACLE, TURNLOCK FASTENER, BRONZE, 1.031IN LG, 9/16IN W, 1/2IN H	71286	212-12	2	X	FB
000228	010	BRACKET, PAD CLAMP			2		
000229	011	PLATE, SUPPORT, SHORT			1		
000230	012	PLATE, SUPPORT LONG			1		
000231	013	RIVET, DOME HEAD, 5/32 IN DIA BY 1/4 IN LG			8		
000232	014	RIVET, DOME HEAD, 5/32 DIA BY 1/4 IN LG			8		
000233	015	HINGE, BUTT, ALUMINIUM LEAVES, CRES, PIN, SINGLE ACTION TYPE, 20-7/8IN. LG BY 1IN.W BY 0.048IN.THK MATERIAL	Z0020	ADEW67-1	1	X	FB
000234	016	RIVET, SOLID, ALUMINIUM ALLOY, 100 DEG FLAT CSK HD, 3/32 IN. BY 5/16 IN. LG	81343	AS125272	17	X	FB
000235	017	SCREW, TAPPING, THREAD FORMING, STEEL, PAN HD, SLOT DRIVE, DOG POINT, CAD PLATED, NO 4 BY 3/4IN LG	80204	B18-6-4	48	X	FB

LAMSON PARAGON FORMALINER PAP 69319

UU835

SERIAL NUMBER	GROUP & ITEM No.	DESIGNATION	MANUFACTURERS		NO OF	EXP. CLASS	LEVEL OF REPAIR
			CODE	PART No.			
1	2	3	4	5	6	7	8
000236	018	PAD 11-1/2 IN LG BY 4-1/4 IN W BY 2-5/16 IN THK (ASSEMBLE FROM SERIAL 262 TO 265)			2		
000237	019	FASTENER LINKLOCK (PART OF SERIAL 221)			8		
000238	020	HANDLE, BAIL, STEEL, 3 1/4IN INSIDE LG OF BAIL, 1 1/4IN CLEARANCE OF BAIL, 1/4IN DIA OF MATERIAL	Z0020	ADEW67-1	2	X	FB
000239	021	RIVET, SOLID, ALUMINIUM ALLOY, RD HD, ANODISED, 1/4 IN. DIA, 1/2 IN. LG	Z0544	B118	8	X	FB
000240	022	PLATE, REINFORCING			2		
000241	023	CASE ASSEMBLY FOR TRANSIT CASE CY-F1A1 (COMPRISES SERIALS 222, 223, 237 TO 240 INCL)			1		
000242	024	PAD 14 IN LG BY 4-1/4 IN W BY 2 IN THK (ASSEMBLE FROM SERIAL 264 TO 267 INCL)			2		
000243	025	PAD 13 IN LG BY 2-1/4 IN W BY 2-1/4 IN THK (ASSEMBLE FROM SERIALS 264 TO 267)			2		
000244	026	PAD 7 IN LG BY 2 IN W BY 1/4 IN THK (ASSEMBLE FROM SERIAL 264 TO 267 INCL			2		
000245	027	PAD 2-5/8 IN LG BY 1-1/4 IN W BY 1 IN THK (ASSEMBLE FROM SERIALS 264 TO 267 INCL)			1		
000246	028	PAD 4-5/8 IN LG BY 2-5/8 IN W BY 2 IN THK (ASSEMBLE FROM SERIALS 264 TO 267 INCL)			1		
000247	029	PAD 4-1/8 IN LG BY 2 IN W BY 1/4 IN THK (ASSEMBLE FROM SERIALS 264 TO 267 INCL)			2		
000248	030	TRAY, ACCESSORIES, FOR TRANSIT CASE CY-F1	Z2813	ADEW67-18671SSUE2	1	X	B
000249	031	PAD 2-15/16 IN BY 1-15/16 W BY 2-3/8 IN THK (ASSEMBLE FROM 264 TO 267 INCL)			1		
000250	032	PAD 2-7/8 IN LG BY 2-5/16 IN W BY 2-5/8 IN THK (ASSEMBLE FROM 264 TO 267 INCL)			1		
000251	033	PAD 6 IN LG BY 3-1/4 IN W BY 3/4 IN THK (ASSEMBLE FROM SERIAL 264 TO 267 INCL)			1		
000252	034	PAD 9 IN LG BY 4 IN W BY 1/4 IN THK (ASSEMBLE FROM 264 TO 267 INCL)			1		

SERIAL NUMBER	GROUP & ITEM No.	DESIGNATION	MANUFACTURERS		NO OFF	EXP. CLASS	LEVEL OF REPAIR
			CODE	PART No.			
1	2	3	4	5	6	7	8
000253	035	PAD, 9 IN LG BY 1-7/8 IN W BY 3/4 IN THK (ASSEMBLE FROM SERIALS 264 TO 267 INCL)			1		
000254	036	PAD, 6 IN LG BY 2-1/2 IN W BY 3/4 IN THK (ASSEMBLE FROM SERIAL 264 TO 267 INCL)			1		
000255	037	PAD, 13-1/2 IN LG BY 2-7/8 IN W BY 1-1/4 IN THK (ASSEMBLE FROM SERIALS 264 TO 267 INCL)			1		
000256	038	PLUG, MACHINE THREAD AIR VALVE	Z2813	ADE(W)67-1047 ISSUE 2	1	X	FB
000257	039	PACKING, PREFORMED, SYNTHETIC RUBBER, 1/4IN ID, 3/8IN OD, 1/16IN THK, YELLOW	Z0160	OR130005	2	X	FB
000258	040	RING, RETAINING STEEL, EXTERNAL 0.145IN.ID BY 0.025IN.THK E SHAPE FOR 3/16IN.DIA SHAFT	79136	5133-18	1	X	FB
000259	041	PAD			1		
000260	042	PAD 15-5/8 IN LG BY 3 IN W BY 1/4 IN THK (ASSEMBLE FROM SERIALS 264 TO 267 INCL)			1		
000261	043	PAD 14 IN BY 3-3/32 IN W BY 1 IN THK (ASSEMBLE FROM SERIALS 264 TO 267 INCL)			1		
000262	044	LABEL			1		
000263	045	PAD 11 IN LG BY 6 IN W BY 2-5/32 IN THK (ASSEMBLE FROM SERIALS 264 TO 267 INCL)			1		
000264	046	CLOTH, KNITTED, NYLON, WATER REPELLENT, 65 GSM, 152CM W, OLIVE GREEN (RMS)	Z2876	8305-2042	1	X	FB
000265	047	PAD, CUSHIONING, POLYETHYLENE VISCOS DVA, 40 IN. LG, 18 IN. W, 1 IN. THK	Z3086	UNIFOAM220	1	X	FB
000266	048	ADHESIVE, SYNTHETIC RUBBER, 1 LITRE CONTAINER	Z0775	1768	1	X	FB
000267	049	ADHESIVE, RESIN, SYNTHETIC RUBBER, 20 LITRE DRUM	Z0496	0117029	1	X	FB
000268	050	PAD 5 IN LG BY 5-1/2 IN W BY 7/8 IN THK (ASSEMBLE FROM SERIALS 264 TO 267 INCL)			2		
000269	051	PAD 5 IN LG BY 2-1/2 IN W BY 31/32 IN THK (ASSEMBLE FROM SERIALS 264 TO 267 INCL)			2		
000270	000	PAD 6 IN LG BY 1-1/2 IN W BY 1/4 IN THK (ASSEMBLE FROM SERIALS 264 TO 267 INCL)			2		

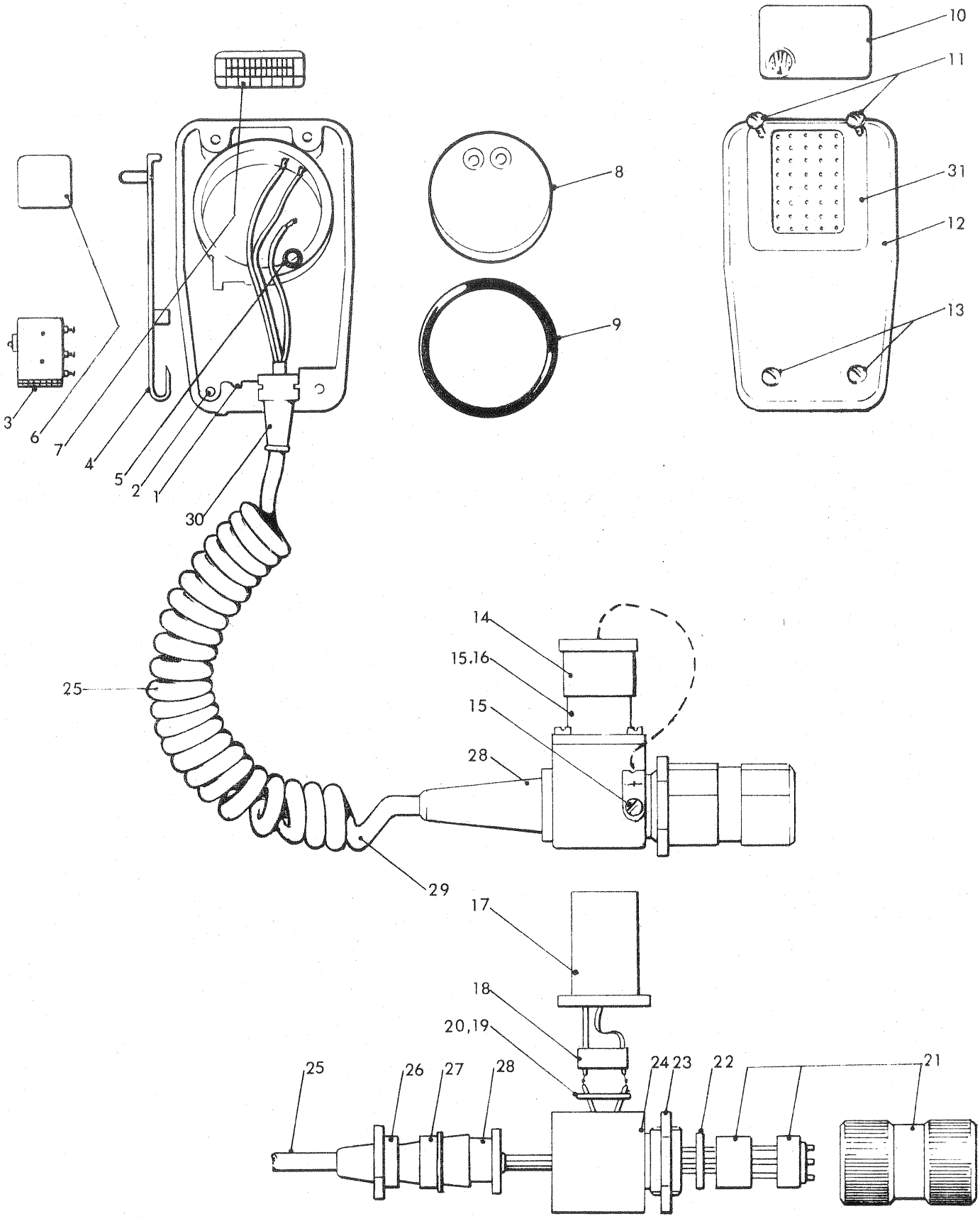

MICROPHONE DYNAMIC M-F1

SERIAL NUMBER	GROUP & ITEM No.	DESIGNATION	MANUFACTURERS		NO OF	EXP. CLASS	LEVEL OF REPAIR
			CODE	PART No.			
1	2	3	4	5	6	7	8
000289	AD	MICROPHONE, DYNAMIC, M-F1					
000290	001	SHELL, MICROPHONE	Z2813	ADEW67-1343ISSUE 1	1	X	UFB
000291	002	HELICOIL THREAD INSERT, 6 BA PUSH TYPE 9590 BY .165			4		
000292	003	SWITCH, SENSITIVE SPDT, 5AMP, 250 VAC	91929	1SE1T	1	X	UFB
000293	004	BAR, ACTUATOR, ELECTRICAL SWITCH	Z2813	ADEW67-1345ISSUE1	1	X	UFB
000294	005	INSULATOR, WASHER, SRBP, 1/4 IN OD, 0.116 IN ID BY 1/32 IN THK	Z2813	TSEW60-453ISSUE1	1	X	UFB
000295	006	BOOT, DUST AND MOISTURE SEAL	Z2813	ADEW67-1346ISSUE1	1	X	UFB
000296	007	PLATE, MODIFICATION RECORD ALUMINIUM 1-3/16IN LG BY 9/16IN W, PRESSURE SENSITIVE	Z2813	TSEW77-5ISSUE2	1	X	UFB
000297	008	MICROPHONE, ELEMENT, 300OHMS	K0242	SDA138291	1	X	UFB
000298	009	GASKET, RUBBER, 1-1/2 IN ID 1-3/1L IN OD 0.06I IN THK	Z2813	ADEW67-1348ISSUE1	1	X	UFB
000299	010	NAME PLATE			1		
000300	011	SCREW, MACHINE, BA, BRASS, CHEESE HD, SLOTTED, DULL NICKEL PLATED, NO 6 BY 1IN	Z0544	B85	2	X	UFB
000301	012	SHELL, MICROPHONE	Z2813	ADEW67-1344ISSUE1	1	X	UFB
000302	013	SCREW, MACHINE, BA, BRASS, CHEESE HD, SLOTTED, DULL NICKEL PLATED, NO 6 BY 5/8IN LG	Z0544	B85	2	X	UFB
C00303	014	CAP PROTECTIVE DUST AND MOISTURE SEAL PLASTICS BLACK 0.627 IN. CONNECTOR SIZE W/NYLON CORD AND CLIP	Z2813	ADEW67-755-1ISSUE1	1	X	UFB
000304	015	SCREW, MACHINE, BA, BRASS, CHEESE HD, SLOTTED, DULL NICKEL PLATED, NO 6 BY 3/16IN LG	Z0544	B85	5	X	UFB
000305	016	WASHER, SPRING TENSION, BERYLLIUM COPPER, CAD PLATED, NO. 6 BA OR 4 UN, 0.250 IN. ODBY 0.006 IN. THK	K7785	991-4-01269-022	4	X	UFB
000306	017	SHELL, ELECTRICAL CONNECTOR	Z2813	ADEW67-1562ISSUE1	1	X	UFB
000307	018	JACK, TELEPHONE	Z2813	ADEW67-1715ISSUE1	1	X	UFB
000308	019	LEAD ASSEMBLY			1		
000309	020	PACKING, PREFORMED, SYNTHETIC RUBBER, 3/8IN ID, 1/2IN OD BY 1/16IN THK	K7766	1806	1	X	UFB
000310	021	CONNECTOR, PLUG, ELECTRICAL 5 CONTACTS, MALE	80058	U182AU	1	X	UFB

LAMSON PARAGON FORMALINER P/ W 8939
UU836

SERIAL NUMBER	GROUP & ITEM No.	DESIGNATION	MANUFACTURERS		NO OF F	EXP. CLASS	LEVEL OF REPAIR
			CODE	PART No.			
1	2	3	4	5	6	7	8
000311	022	WASHER, NONMETALLIC, SYNTHETIC RUBBER, 0.312 IN ID BY 0.625 IN OD BY 0.094 IN THK	Z0020	ADEW67-1	1	X	UFB
000312	023	NUT, PLAIN, HEXAGON	Z2813	ADE(W)67-1368 ISSUE 2	1	X	UFB
000313	024	INTERCONNECTING BOX	Z2813	ADEW67-1372ISSUE2	1	X	UFB
000314	025	CABLE ASSEMBLY, SPECIAL PURPOSE, ELECTRICAL 3FT-6IN LG	Z0020	ADEW67-13761ISSUE1	1	X	UFB
000315	026	CANNON NUT CLAMPING			1		
000316	027	CANNON SLEEVE CLAMP			1		
000317	028	BOOT CONNECTOR			1		
000318	029	SLEEVE IDENTIFICATION			1		
000319	030	GROMMET SIZE 4			1		
000320	031	CLIP, SPRING TENSION, STAINLESS STEEL, 1.625IN LG, 1.437IN W, 0.028IN THK MAIERIAL, 2MTG HOLES	Z0020	ADEW67-1	1	X	UFB

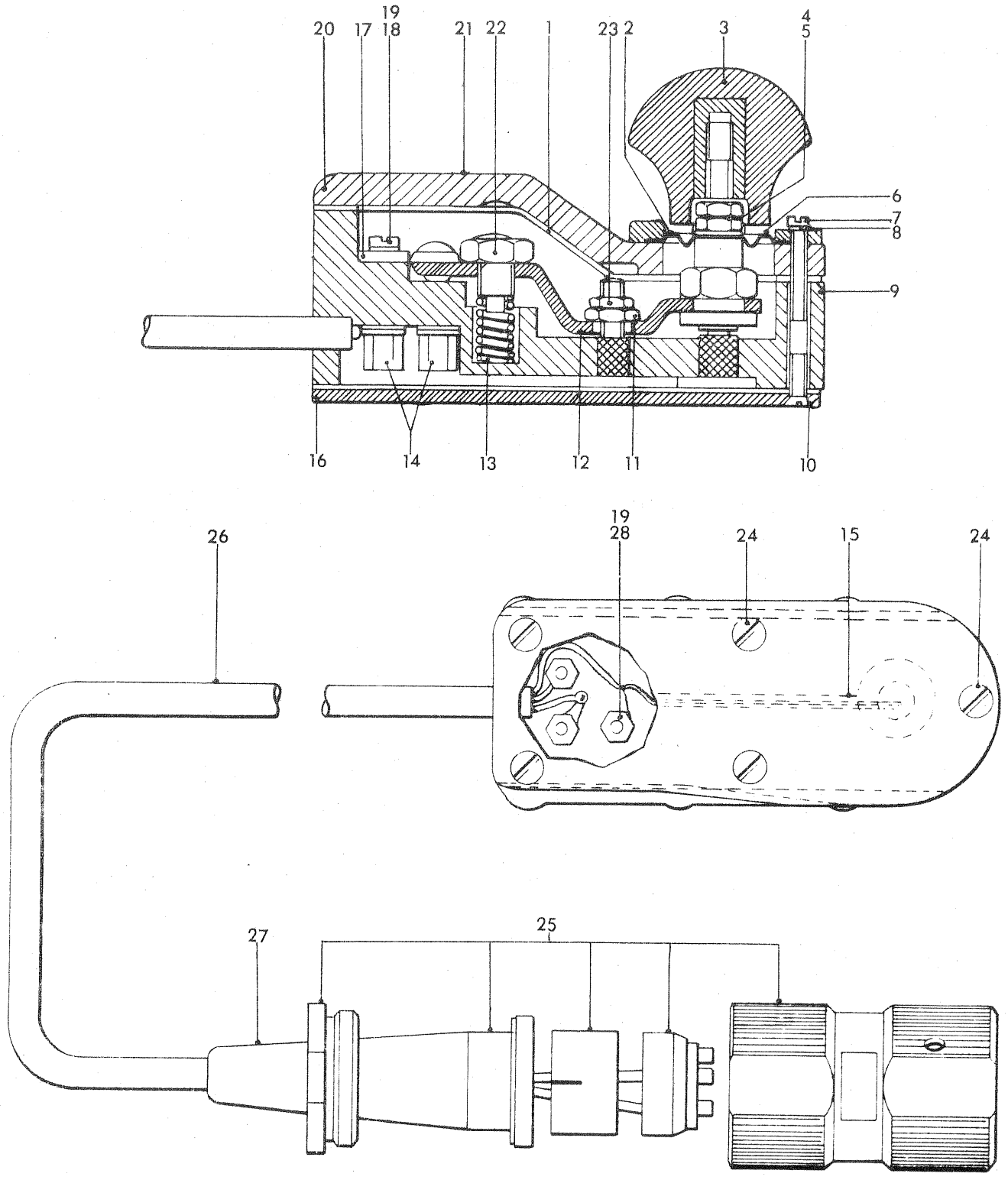

KEY, TELEGRAPH, LIGHTWEIGHT, KY-F1A1

SERIAL NUMBER	GROUP & ITEM No.	DESIGNATION	MANUFACTURERS		NO OF	EXP. CLASS	LEVEL OF REPAIR
			CODE	PART No.			
1	2	3	4	5	6	7	8
000340	AE	KEY, TELEGRAPH, LIGHTWEIGHT, KY-F1A1					
000341	001	BODY ASSEMBLY			1		
000342	002	BOOT, DUST AND MOISTURE SEAL	Z2813	TSE(W)9-32ISSUE4	1	X	FB
000343	003	KNOB, KEY, TELEGRAPH	Z2813	TSWE9-13ISSUE4	1	X	UFB
000344	004	NUT, PLAIN, HEXAGON, BA, BRASS, LOCK, DULL NICKEL PLATED, NO 4	Z0544	B85	2	X	FB
000345	005	WASHER, LOCK SPRING STEEL, SINGLE TURN, SQ SECTION, CAD PLATED, NO 4 BA BOLT SIZE	K7766	1802	1	X	FB
000346	006	WASHER, FLAT, RD, BRASS, "D" SHAPE HOLE, 0.145IN DIA, 0.059IN CENTRE OF HOLE TO CENTRE OF FLAT, 0.028IN THK	Z2813	TSEW9-35 ISSUE 4	1	X	FB
000347	007	SCREW, MACHINE, BA, BRASS, FILLISTER HD, DULL NICKEL PLATED, NO 8 BY 7/16IN LG	Z0544	B85	3	X	FB
000348	008	GASKET BRASS	Z2813	TSE(W)9-26 ISSUE 4	1	X	FB
000349	009	GASKET COVER	Z2813	TSE(W)9-31 ISSUE 4	1	X	FB
000350	010	GASKET, PLASTICS, 0.825IN W, 2.490IN LG, 0.031IN THK, W/5 BOLT HOLES	Z2813	TSE(W)9-29 ISSUE 5	1	X	FB
000351	011	NUT, PLAIN, HEXAGON, BA, BRASS, CAD PLATED, LOCK, NO 6	Z2813	TSEW9-33	1	X	FB
000352	012	CONTACT, ELECTRICAL, KEYING ARM ASSEMBLY	Z2813	TSEW9-15ISSUE7	1	X	FB
000353	013	SPRING, HELICAL, COMPRESSION	Z2813	TSE(W)9-27 ISSUE 3	1	X	FB
000354	014	NUT, CONE SEAT, HEXAGON, BA STEEL, CAD PLATED, NO 8, 5/32 IN W A/F BY 0.225 IN H O/A	Z2813	TSE(W)9-25ISSUE6	3	X	FB
000355	015	SLEEVING, 1 MM ID BY 5 MM WALL PVC RED, 2 INS LG			1		
000356	016	BASE, TELEGRAPH KEY	Z2813	TSEW9-28ISSUE6	1	X	FB
000357	017	PLATE			1		
000358	018	SCREW, MACHINE, BA, BRASS, CHEESE HD, SLOTTED, DULL NICKEL PLATED, NO 8 BY 3/16IN LG	Z0544	B85	2	X	FB
000359	019	WASHER, SPRING, TENSION, BERYLLIUM COPPER, CAD PLATED, PASSIVATED, 0.095IN. ID, 0.206IN. OD, 0.006IN. THK (NO.8 BA OR 2UN SCREW SIZE)	K1020	B02614	4	X	FB
000360	020	COVER, KEY, TELEGRAPH	Z2813	ADEW82-3ISSUE2	1	X	FB

SERIAL NUMBER	GROUP & ITEM No.	DESIGNATION	MANUFACTURERS		NO OFF	EXP. CLASS	LEVEL OF REPAIR
			CODE	PART No.			
1	2	3	4	5	6	7	8
000361	021	SCREW, MACHINE, BA, BRASS, FILLISTER HD, DULL NICKEL PLATED, NO 8 BY 5/16IN LG	Z0544	B85	4	X	FB
000362	022	NUT, LOCK, HEX, 2BA, MS, CAD PLATED			1		
000363	023	NUT, PLAIN, HEXAGON, BA, BRASS, LOCK, DULL NICKEL PLATED, NO 6	Z0544	B85	1	X	FB
000364	024	SCREW, MACHINE, BA, MILD STEEL, FLAT CSK HD, SLOTTED, CAD PLATED, NO.8 BY 1/4IN.LG	Z0101	A33-Z8	5	X	FB
000365	025	CONNECTOR, PLUG, ELECTRICAL 5 CONTACTS, MALE	80058	U182AU	1	X	UFB
000366	026	CABLE ASSEMBLY, SPECIAL PURPOSE, ELECTRICAL, 2FT 6IN	Z2813	ADEW67-1560ISSUE1	1	X	UFB
000367	027	BOOT CONNECTOR			1		
000368	028	TERMINAL, LUG, 0.398 IN. LG, BY 0.172 IN. W	Z0220	H290	2	X	UFB

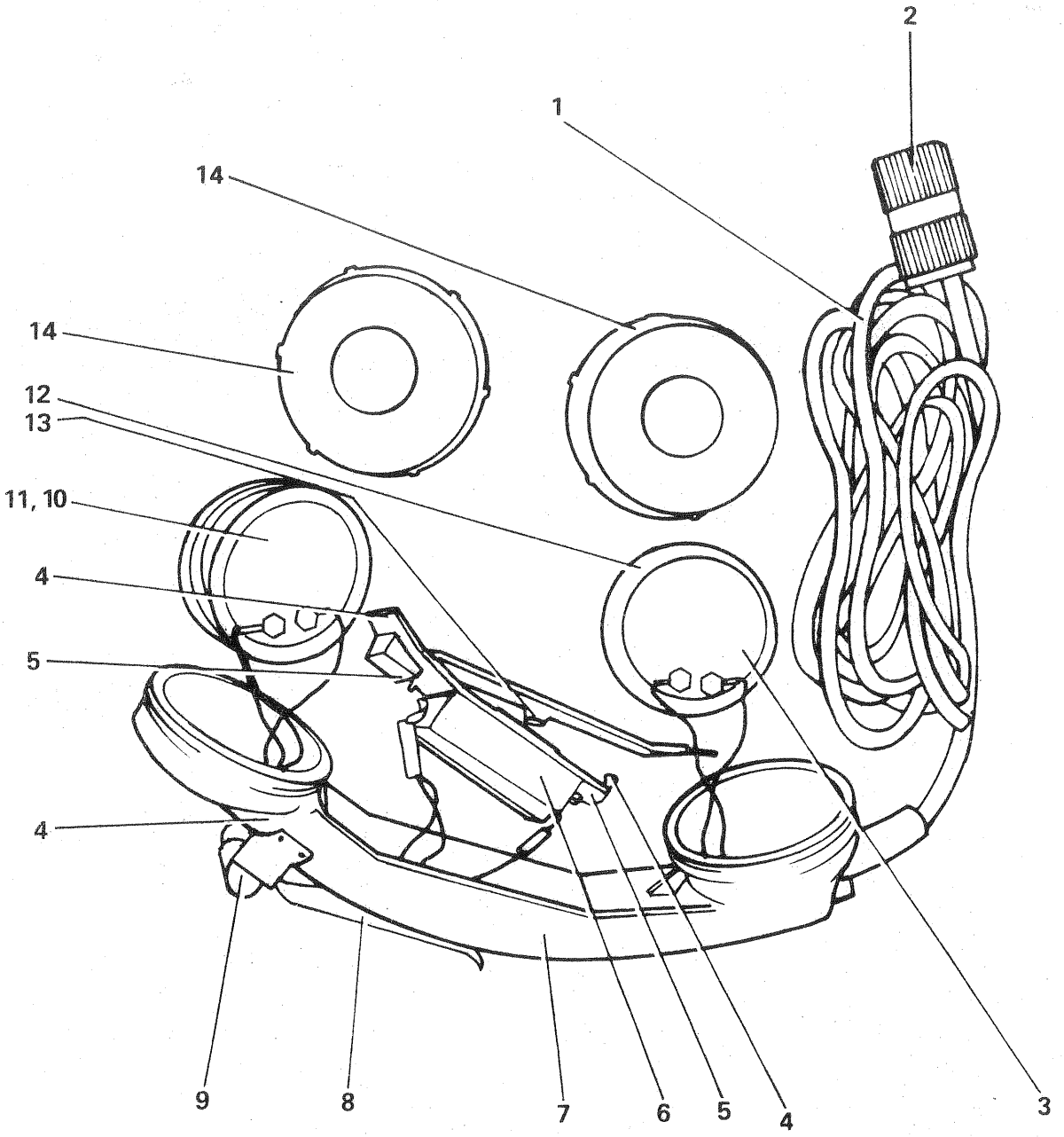

HANDSET, H-F2

SERIAL NUMBER	GROUP & ITEM No.	DESIGNATION	MANUFACTURERS		NO OFF	EXP. CLASS	LEVEL OF REPAIR
			CODE	PART No.			
1	2	3	4	5	6	7	8
000389	AF	HANDSET, H-F2					
000390	001	CABLE ASSEMBLY, SPECIAL PURPOSE, ELCCTRICAL	Z2813	ADEW67-1543ISSUE1	1	X	UFB
000391	002	CONNECTOR, PLUG, ELECTRICAL 5 CONTACTS, MALE	80058	U182AU	1	X	UFB
000392	003	MICROPHONE, ELEMENT, 300OHMS	K0242	SDA138291	1	X	UFB
000393	004	SCREW, TAPPING, THREAD FORMING, 18/8 CRES, PAN HD, SLOT DRIVE, DOG TYPE POINT, NO. 2 BY 5/16 IN. LG TO AS B194 TYPE PSB	Z2813	ADE(W)67-1542-16	9	X	UFB
000394	005	SCREW, MACHINE, BA NORMAL FIT, BRASS, RD HD, SLOT DRIVE, CAD PLATED, NO 8 BY 7/32 IN LG	Z0544	ASB85	2	X	UFB
000395	006	SWITCH, PUSH, PRESSEL ASSEMBLY	Z2813	TSEW37-3ISSUE2	1	X	UFB
000396	007	BODY HANDSET (MODIFIED)			1		
000397	008	SPRING, SPIRAL, TORSION BERYLLIUM COPPER, 1/2IN W, 27/8IN O/A LG, 26 SWG (0.018IN) THK	Z0020	ADE(W)67-1992	1	X	UFB
000398	009	SUPPORT, SPRING, BERLLIUM COPPER, 9/16IN.W, 15/16IN.O/A LG, 22 SWG (0.028IN.) THK	Z0020	ADEW67-1	1	X	UFB
000399	010	EARPHONE ELEMENT	K0236	SDA138292	1	X	UFB
000400	011	WASHER, LOCK SPRING STEEL, SINGLE TURN, SQUARE SECTION, NO 6 BA BOLT SIZE	K7766	1802	4	X	UFB
000401	012	GASKET	Z2813	TSE(W)37-26ISSUE 3	2	X	UFB
000402	013	BAR, ACTUATOR, ELECTRICAL SWITCH	Z2813	TSEW37-25ISSUE7	1	X	UFB
000403	014	CAP, ELECTRICAL, MICROPHONE RECEIVER INSET	Z2813	TSEW37-24ISSUE5	2	X	UFB