THIS SPECIFICATION IS THE PROPERTY OF THE ARMY DESIGN ESTABLISHMENT, PRIVATE BAG No. 12, P.O. ASCOT VALE, VICTORIA, AND HAS BEEN PREPARED WITH THE OBJECT OF FACILITATING DEVELOPMENT OF EQUIPMENT TO THE SATISFACTION OF THE CHIEF SUPERINTENDENT, ARMY DESIGN ESTABLISHMENT, AND MUST BE USED ONLY FOR THAT PURPOSE.

A7

WHEN PROTOTYPE EQUIPMENT, CONSTRUCTED IN ACCORDANCE WITH THE FINAL ISSUE OF THIS SPECIFICATION, HAS BEEN APPROVED BY THE CHIEF SUPERINTENDENT, THIS SPECIFICATION WILL BE SUPERSEDED BY AN ARMY(AUST) SPECIFICATION ISSUED UNDER THE AUTHORITY OF THE MASTER GENERAL OF THE ORDNANCE.

NO COPIES IN WHOLE OR IN PART MAY BE MADE WITHOUT THE PERMISSION OF THE CHIEF SUPERINTENDENT, ARMY DESIGN ESTABLISHMENT.

DEVELOPMENT SPECIFICATION DD(X) 202

FOR

PRODUCT IMPROVEMENTS TO RADIO SET PRC/F1

ISSUE 1

Issue	Date	Change Authority	Paragraph
1	18 Jul 69		Original Issue

PREPARED BY ARMY DESIGN ESTABLISHMENT AND ISSUED UNDER THE DIRECTION OF THE MASTER GENERAL OF THE ORDNANCE.

CONTENTS

Specification Endorsed
18 Jul '69.

B. Sandell for .....Brigadier
(L.Y.C. RANK)
Chief Superintendent
Army Design Establishment

Approved
18 Jul/69

.....for Major General
(T.F. CAPE)
MASTER GENERAL OF THE ORDNANCE

1. SCOPE

1.1 This Specification covers the investigation and development of product improvements to the Receiver-Transmitter, Radio RT-F1/PRC, the Regulator, Battery Charger, F1 and the Power Supply PP-F1.

1.2 The Specification also covers the manufacture of pilot models, followed by tooling and prototypes, as necessary, of the improved circuits, modules or other items for evaluation testing.

1.3 Following the approval of the prototype devices the Specifications listed in para 2.1 will be amended as required so that production equipments shall be produced with the required improvements.

2. APPLICABLE DOCUMENTS

Reference is necessary to the latest issues of the following documents:-

2.1 Specifications

DEF(AUST)3000	-	General Requirements for Service Telecommunications Equipment
ARMY(AUST)174	-	Radio Set PRC-F1
ARMY(AUST)178	-	Regulator Set MX-F1
ARMY(AUST)176	-	Installation Kit, Electronic Equipment, MK-F8
DD(X)187	-	Modulator/Oscillator Kit, Morse Keyer Adaptor, Radio Set AN/PRC-25.

Copies of these Specifications are available from the Chief Superintendent, Army Design Establishment (ADE), Private Bag No. 12, P.O. ASCOT VALE, Victoria, 3032.

2.2 Standards

AS CZ1	-	Engineering Drawing Practice.

Copies of this Standard are available from the Standards Association of Australia, in all Capital Cities.

2.3 Drawings

ADE(M)24-2	-	Cleaning, Pretreatment and Painting of Metal
ADE(W)67 series	-	Radio Set PRC-F1, Power Supply PP-F1
ADE(W)73 series	-	Regulator, Battery Charger, F1.

Copies of these Drawings are available from the Chief Superintendent, ADE, Private Bag No. 12, P.O. ASCOT VALE, Victoria, 3032

3. DEFINITIONS

3.1 "Inspecting Officer" shall mean the Chief Superintendent, Army Design Establishment (ADE) or his representative.

3.2 "Approved" shall mean approved by the Inspecting Officer.

3.3 "R/T Unit" shall mean the Receiver-Transmitter, Radio RT-F1/PRC.

4. REQUIREMENTS

4.1 General

2 July 64

4.1.1 Within three months or less of commencing work the Contractor shall supply to ADE eight typed reports, one covering the investigations into each of the required improvements listed in paras 4.2 to 4.9 inclusive.

4.1.2 The investigations shall consider the technical feasibility of the required improvements and the factors relevant to the inclusion of the improvements in the production models of the R/T Unit following the first thousand and in the case of the Regulator and the Power Supply in units after serial numbers 299 and 143 respectively. Where applicable the investigation of technical feasibility shall include the building of electrical models to demonstrate the achievable performance.

4.1.2.1 Each report shall include estimates of the development costs of the improvements, listing separately the costs of pilot models, tooling and prototype development and manufacture, as well as costs of producing the necessary Drawings and amended documentation including E.M.E.I.'s and illustrated parts lists.

4.1.3 Following evaluation by ADE of the above reports it is anticipated that development of all, except very unpromising or expensive improvements, will proceed. Some improvements are such that the electrical model will require to be followed by pilot models which will be evaluated prior to the ordering of tools in the tooling phase. For other improvements the tooling phase may be commenced immediately and evaluation models (in these cases, prototypes), will be required "off the tools".

4.1.3.1 No improvement shall be developed or any other expenditure incurred upon any improvement for which a Contract authorising such development or expenditure is not current at that time. Contract(s) will be authorised as required following evaluation by ADE of sufficiently promising prior work or if the improvement is so strongly desired that further work is justified.

4.1.3.2 The evaluation and testing of pilot model and prototype improvement may be made, at the discretion of the Inspecting Officer, at the Contractor's works.

4.1 (Cont'd)

4.1.4 All drawings of improvement parts, circuits etc., (see also para 4.12) will initially be signed by the Inspecting Officer as 'Y' drawings, prior to which time no financial committments shall be incurred regarding tooling costs. Subsequently, following assessment of prototype items off tools, all drawings will be signed by the Inspecting Officer as 'Z' drawings if it is considered that the improvement parts are ready for production and inclusion in production equipments. The Y and Z signatures will have the same meaning as expressed in Drawing ADE(X)601-2.

4.2 Increases in Permissible C.W. Keying Speed (6)

4.2.1 The use of the Coder, Burst Transmission, AN/GRA 71 with the R/T Unit shall be investigated.

4.2.2 The use of the Coder shall require that the transmitter keying rate be of the order of 300 words per minute.

4.2.3 The present keying circuits of the R/T Unit shall be so modified that they can be used in the C.W. modes at the increased keying rate. X

4.2.4 The necessary modified circuits, and any adaptors, cables or other accessories required shall be developed together with full written operating instructions for the system.

4.2.5 Following a demonstration of performance, satisfactory to the Inspecting Officer, of an electrical model of the modified keying system the improvement may proceed to the tooling phase.

4.2.6 For evaluation testing six prototype sets of modifications made off the tools shall be installed in R/T Units (to be supplied by ADE).

4.3 Circuit and Component Improvements

4.3.1 The replacement of the present wired-in relays with plug-in equivalents (2) shall be investigated and a suitable arrangement is to be developed.

4.3.2 The replacement of some of the circuits on the present 7 plug-in circuit boards, which now use discrete components, by new circuits employing integrated circuits shall be investigated. (5)

4.3.2.1 New circuit boards employing integrated circuits shall be developed if the investigation demonstrates that a reasonable cost saving is made by their use. X

4.3.2.2 The new circuit board shall be interchangeable with present circuit boards. X

4.3.3 The elimination of as many specially plated surfaces as possible from the R/T Unit shall be investigated. (5)

4.3 (Cont'd)

4.3.3.1 The investigation shall include the construction of units with the proposed alternate surface treatment and consequent proof that satisfactory electrical operation of these units is obtained.

4.3.3.2 Any proposed alternative surface treatment shall simultaneously be investigated from the viewpoint of possible production problems.

4.3.4 The removeable spring wire retainers on the lid of the synthesiser shall be replaced by non-removeable slide catches of approved design. (3)

4.3.5 Items required for testing under para 4.3 are detailed as follows:-

4.3.5.1 Neither pilot models nor prototypes of the new plug-in relay disposition will be required for testing, provided suitable arrangements are made for the Inspecting Officer to inspect and approve electrical performance, vibration and bump testing of one model of the new disposition.

4.3.5.2 Pilot Models of the new plug-in circuit boards will not be required for evaluation provided that suitable arrangements are made for the Inspecting Officer to inspect and approve suitable temperature and performance tests on developmental boards. Six prototype boards of each type shall be required for evaluation.

4.3.5.3 Pilot models of units with alternative surfaces (to gold plating) are not required to be delivered for evaluation. The Contractor shall however provide evidence that the alternative surface treatments are practicable and shall provide details of the processes used in their preparation.

4.3.5.4 Pilot model and prototype catches shall be required for evaluation at the Contractor's works and it shall be demonstrated, to the satisfaction of the Inspecting Officer, that the catches can be satisfactorily used and can withstand the effects on the R/T Unit of drop, bump and vibration tests.

4.4 Improved Frequency Synthesiser

4.4.1 An improved frequency synthesiser system shall be developed which shall give the following advantages over the present design. (4)

a. be more economical to produce.

b. have simpler circuit system and maintenance requirements.

c. require fewer spares holdings of different circuit cards.

d. achieve elimination of the spurious frequency outputs which result, in the present synthesiser, in producing self-generated receiver responses on about 16 channels (see Specification ARMY(AUST)174 para 4.4.8.8).

e. weigh less.

4.4 (Cont'd)

4.4.2 An R/T Unit fitted with the new synthesiser shall comply with the relevant requirements of Specification ARMY(AUST)174, in all respects. In the case of spurious receiver responses as specified in para 4.4.8.8 of Specification ARMY(AUST)174 there shall occur a very substantial improvement.

4.4.3 The dc power input required to operate the new synthesiser shall not exceed that required for the present design (as given in Drawing ADE(W)67-1773 Sheet 3 Para 4.4.2).

4.4.4 The mechanical design of the new synthesiser shall be such that it is completely interchangeable with the present synthesiser but occupies less space. X

4.4.5 Two pilot model synthesisers shall be required for evaluation which may be done at the Contractors premises.

4.4.6 Following successful evaluation of the pilot model synthesisers the development may proceed into the tooling phase. Six prototype synthesisers shall be required for evaluation testing.

4.5 Improvements in Regulator, Battery Charger F1 and Power Supply PP-F1

4.5.1 The disposition of the circuitry now on the circuit boards within the Regulator and Power Supply shall be investigated to see if more easily maintainable circuitry can be arranged. (5)

4.5.2 It is required that the numerous connecting wires to the circuit board(s) be connected through plug-in connector(s) or edge connector(s).

4.5.3 An investigation shall be made to see if the present large circuit board in the Regulator can be divided into two or more smaller boards.

4.5.4 It is essential that the improvements of para 4.5 be made without changing the external dimensions of the Regulator or Power Supply.

4.5.5 One pilot model Regulator, Battery Charger F1 and one pilot model Power Supply PP-F1 with required improvements shall be manufactured for evaluation.

4.5.6 Following successful evaluation of the pilot model Regulator and Power Supply development may proceed into the tooling phase. Two prototype Regulators and two prototype Power Supplies shall be required for evaluation testing.

4.6 Improved Tuning Inductor for 8 ft Whip Antenna

4.6.1 It is required that the possibility of operating the 8 ft Whip Antenna without the present conspicuous Antenna Coupler (CU-F1) be investigated. (11)

4.6 (Cont'd)

4.6.2 The approach to be followed shall be to provide a smaller, less conspicuous replacement for the Coupler CU-F1 which may be used in a similar position to the present Coupler or may be located elsewhere, having regard to the Harness used to carry the R/T Unit and the Accessory Bags attached to the Harness.

4.6.3 Two pilot model Couplers shall be required for evaluation including field suitability test. Provided the evaluation and tests are satisfactory the development may proceed to the tooling phase. Six prototype Couplers shall be required for evaluation testing and at least two of these shall be field tested.

4.7 Improvements in Receiver RF Amplifier and Mixer

4.7.1 The RF Amplifier and Mixer circuits shall be investigated and redesigned to provide improved cross-modulation and desensitization characteristics. (6)

4.7.2 An investigation shall be made of the possibility of increasing the protection of the receiver against possible damage from nearby transmitters.

4.7.3 It is essential that any modified ('new') RF Amplifier produced as a result of this development shall be a direct "Plug-in" replacement for modules to the present design. X

4.7.4 It is desirable but not essential that the dc Power input required to operate a new RF Amplifier should not exceed that required by the present design. The Design Authority shall be kept informed, in writing, of any proposal to increase this input above the present level.

4.7.5 A R/T Unit fitted with a new RF Amplifier shall comply with relevant requirements of Specification ARMY(AUST)174 in all respects.

4.7.6 Following a demonstration of performance satisfactory to the Inspecting Officer of an electrical model of the improved RF Amplifier/Mixer the improvement may proceed to the tooling phase.

4.7.6.1 For evaluation testing, six prototype RF Amplifier/Mixer Units shall be required.

4.8 Improvements in Receiver and Transmitter Protection

4.8.1 An investigation shall be made of the possible means by which increased protection may be obtained for the receiver and the transmitter of the R/T Unit against possible damage from nearby transmitters. 8

4.8 (Cont'd)

4.8.2 Reference to such protection is made for the receiver (4.7.2) and for the transmitter (4.9.1) each considered as an individual unit. It is desired however that the problem of protection be given consideration as a whole so that internal disconnection of the antenna lead within the R/T unit, and any other method of protection which is external to the receiver and transmitter sections, shall be investigated.

4.8.3 Within three months of commencing work the Contractor shall provide to ADE one typed copy of his proposals relating to improved receiver and transmitter protection, including the requirements of 4.7.2 and 4.9.1.

4.9 Transmitter Improvements

4.9.1 An evaluation of the increase in PA transistor safety margin against damage, including damage from nearby transmitters, shall be made by investigating the replacement of the present PA output transistors (2N3297) with transistors with higher ratings.

4.9.1.1 Other methods of protecting the transmitter against damage from nearby transmitters shall also be investigated (see also para 4.8).

4.9.2 An evaluation shall be made of the means by which the transmitter, when operating on SSB mode, shall have the 2nd sum output reduced to at least 40 dB below the level of either of two equal output tones modulating the transmitter to full peak envelope output power at all frequencies.

4.9.3 The possibility of further reducing the 3rd order intermodulation transmitter output levels below those specified in para 4.4.9.6 of Specification ARMY(AUST)174 shall be investigated.

4.9.4 Development of an improved PA system incorporating all or any of the required improvement of para 4.9 shall only proceed when all have been evaluated and it has been shown that proceeding to the development stage is justified by the probable improvements.

4.9.5 If the development of an improved PA system is proceeded with one complete pilot model and six complete prototype PA systems shall be required for evaluation.

4.10 Components

Where practicable all new components, required as a result of this Specification, shall comply with the relevant sections of DEF(AUST)3000, or where this does not apply, to an approved Australian, British or American standard.

4.11 Materials

The materials used in the manufacture of development and production models shall comply with the relevant Australian, British or American standards, or in their absence, to a standard approved by the Inspecting Officer.

4.12 Documentation

4.12.1 Drawings

4.12.1.1 The Contractor shall supply to the Chief Superintendent, ADE, the following:

a. One set of prints of all drawings (existing at the time of demand) delineating the improved circuit module, unit or item when it is completed and ready for evaluation testing.

b. One complete set of prints on ADE sheets (supplied "free in aid") delineating the accepted improvement within two weeks of the date of approval of the improvement.

4.12.1.2 All new drawings shall initially be numbered ADE(X)733 series and shall be converted to the relevant ADE(W) series when a decision is made to include any improvement in production equipment.

4.12.1.3 The drawings shall be prepared in accordance with AS CZ1 drawing practice instructions. Approval of drawing practice, quality and associated aspects, rests with ADE's Chief Drafting Officer, who shall be the Chief Superintendent's representative for matters relating to drawings.

4.12.1.4 At any time during the course of the contract, the Contractor shall make available on demand to ADE, all drawings and calculations existing at the time of the demand.

4.12.1.5 The drawings shall be in good condition when handed over to ADE, they must therefore be carefully handled and filed with the Contractor. Binding of the edges of the sheets is desirable as it affords them some protection.

4.12.1.6 The Contractor shall be advised of possible changes to the drawings resulting from acceptance testing. The Contractor shall then amend the drawings if necessary, so that they will be completed within the period allowed (see para 4.12.1.1b). The method and the details of delivery shall be as detailed by the Chief Drafting Officer.

4.12.1.7 The Contractor shall supply any minor additional data in excess of that which may be shown on the drawings which the Department of the Army may require for cataloguing purposes.

4.12 (Cont'd)

4.12.2 Draft User and Technical Note Changes

4.12.2.1 At the time of completion of the first prototype circuits, modules or items the Contractor shall supply to the Inspecting Officer two typed copies of suggested amendments and additions to the relevant portions of the following publications relating to the Radio Set PRC-F1, Power Supply PP-F1 and the Regulator, Battery Charger, F1.

a. Provisional User Handbook

b. Data Summary EMEI

c. Technical Description EMEI

d. Unit Repair EMEI

e. Field and Base Repair EMEI

4.12.3 Parts Lists and Illustrations

4.12.3.1 Within three months of the time that the improved circuits, modules, units and new items are ready for delivery or evaluation the Contractor shall supply to the Inspecting Officer amendments and additions to the parts lists and illustrations relevant to the improvements together with additional parts lists and illustrations relating to newly developed items.

4.12.3.2 The standard and quality of these amendments and additions shall be equal to the original parts lists and illustrations.

5. QUALITY ASSURANCE PROVISIONS

5.1 Inspection

All supplies shall be subject to approval by the Inspecting Officer, and any supplies submitted by the Contractor for acceptance which, in the opinion of the Inspecting Officer, are inferior in quality of materials or workmanship, or differ in any respect from the Specification or drawing, will be rejected by him.

5.2 Access

The Inspecting Officer shall have free access to the Contractor's design and construction departments during the period of the contract. The Inspecting Officer shall also have free access to any sub-contractor engaged on either design or construction for this contract. The Contractor shall inform the Inspecting Officer in writing, the name and address of all sub-contractors when a sub-contract is let, and the sub-contractor shall be informed by the Contractor that such access is mandatory with the sub-contract.

5.3 Facilities

The Contractor shall be responsible for providing any equipment and facilities, including office accommodation, that may be required by the Inspecting Officer, for the purpose of ensuring that the improved equipments comply with this Specification, during design, draughting, construction and evaluation of the pilot and prototype models.

5.4 Tests

5.4.1 The Quality Assurance provisions of Specifications ARMY(AUST)174, 178 and 176 shall be met in respect of R/T Units, Regulators and Power Supplies fitted with the required improvements except where modified by change in performance as detailed in Section 4 of this Specification.

5.4.2 Improvement pilot models and prototypes required for evaluation shall be subjected to climatic and durability tests (simulating the effects of such tests within a complete unit) which are to be determined by ADE and shall be selected from the tests of Specifications ARMY(AUST)174, 176 and 178 as applied to the R/T Unit, the Regulator and the Power Supply.

5.4.3 All the requirements of the above-mentioned Specifications regarding performance of the relevant unit under climatic and durability testing shall be met by the improved pilot model or prototype.

5.4.4 The Contractor shall be responsible for carrying out all the tests required by the Inspecting Officer to ensure that the improved units are in accordance with this Specification.

6. PREPARATION FOR DELIVERY

6.1 Packaging and delivery shall be as designated in the tender schedule or official order.

7. NOTES

7.1 Ordering Data

Procurement data shall specify the following:

7.1.1 Title, number and date of this Specification (see face page)

7.1.2 The type of packaging to be used by the Contractor.

7.2 Amendments to Specification

Should the Contractor desire to amend this Specification, he shall submit details of the proposed change to the Inspecting Officer. The amendment shall become effective when the Contractor receives either written approval or an amended Specification from the Inspecting Officer.

* * * * * * * *

Copies of this Specification may be obtained from:

The Chief Superintendent,
Army Design Establishment,
Private Bag No.12,
P.O. ASCOT VALE, Victoria, 3032.

PORTABLE RADIO COMMUNICATION SET PRC-F1.

Amalgamated Wireless (Australasia) Limited, for a number of years, has produced a military manpack high-frequency radio communication station of Australian design under Army contract through the agency of the Australian Commonwealth Department of Supply. This unit, the Wireless Station Radio Set A510, is in widespread use by British and Australian forces. However, the introduction of single sideband techniques and the changing operational requirements of the armed forces have created the need for an entirely new manpack set with an increased range and a greater number of channels.

As part of an Army development project the Company has been awarded a series of development, tooling and production contracts for a new manpack set to fulfil these requirements. The new set known as the PRC-F1 has been developed and produced through all stages under the full technical control of the Army Design Establishment.

The design team was confronted with several problems. They had to produce a manpack set that contained a built in frequence synthesizer with its own precision frequency standard, and that provided suppressed carrier, single sideband operation on any one of 10,000 channels between 2 and 12 MHz. But at the same time it had to be simple to operate, light and robust so that it could be carried and used by combat troops.

These problems have been satisfactorily solved with the new equipment, the PRC-F1 which is completely transistorised and is with its several accessories capable of supplying high-frequency communications which may be required by an infantry battalion or similar formation. It is completely self-contained for use by one man, or powered from a variety of external sources when employed in the vehicular mounted or transportable ground station roles.

The flexibility of a modern Army demands equal flexibility in its equipment. It is believed that the powering arrangements, the modulation capabilities available, the antenna matching facilities provided, together with complete sealing of the set and a temperature tolerance of -20 to +70 degrees centigrade will give it the needed flexibility.

Of particular significance is the frequency generation system which is described more fully on the following pages.

Offering as it does such a large number of channels on precisely controlled frequencies, the equipment can be set up in the field without the logistic problems associated with the supply of crystals.

DESCRIPTION

The PRC-F1 is primarily designed for use as a 10 watt manpack single sideband receiver-transmitter using an 8 ft., whip antenna. Continuous wave and amplitude modulation modes of operation are also provided. An external antenna coupler unit, a vehicle power supply, and a range of rod and wire aerials extends its use to both vehicle and ground stations.

A decade tuning system having four dials selects any one of 10,000 channels spaced at 1 kHz intervals from 2000 kHz to 11,999 kHz. The assigned frequency of operation for each mode of communication is set directly on the dials.

For the reception of A.M. a 6 kHz bandwidth and a true A.M. detector are used. Two tuned coupled circuits precede the first transistor in the R.F. amplifier, to reduce the possibility of cross-modulation. C.W. modulation is sub-divided into narrow band (425 Hz bw.), 2 kHz tone on ssb. and wide-band (6 kHz bw.) using a variable beat-frequency oscillator.

The peak envelope power is automatically maintained into the internal coupling circuit of the R/T unit and from this point efficient matching is provided into any one of the three following antennae:

An 8 ft. whip antenna and loading coil.
An end-fed quarter-wave antenna.
A half-wave dipole.

The external antenna coupler provides efficient coupling into 16, 27 and 43 ft. vertical rod antennae and also into quarter and half-wave end-fed wire antennae and a fixed length (43 ft) wire antenna.

The receiver R.F. amplifier and the transmitter output filters are automatically tuned and selected when the assigned frequency is set on the dials. The adjustment of the whip antenna loading inductor, if the whip antenna is in use, or the adjustment of the antenna tuning and matching knobs for maximum power when a wire antenna is in use, are the only other tuning operations necessary with the R/T unit.

A feature of this equipment is the small accurate synthesizer which consumes 450 milliwatts. The synthesis process used is a direct one in which the 1 MHz, 100 kHz and 10 kHz increments are obtained by the arithmetic manipulation of components selected from 100 kHz and 10 kHz harmonic sequences. These sequences are derived from a 4 MHz temperature compensated reference oscillator. The 1kHz increments are obtained from a series of ten crystals 200 to 209 kHz inclusive.

The stability of the reference crystal is better than ± 2 p.pm. over the temperature range -20 to +70 degrees C. and for a period of 90 days. A further error of $\pm$ 5 Hz maximum is introduced by the 1 kHz step arrangement. The result is a total carrier error of $\pm$ 25 Hz maximum at 12 MHz and $\pm$ 8 Hz maximum at 2 MHz.

Seven plug-in circuit boards and three plug-in shielded modules make up most of the electrical part of the R/T unit, and lead to easy servicing of the equipment. Also for convenience in servicing, the chassis, which carries the main electrical circuit boards and modules, is readily separated from the front panel.

All controls are positioned on the front panel and may be manipulated with a gloved hand. Selected front panel lettering is filled with luminous paint with a half-light period of about 2 years. An interesting feature of the set is the use of an audio tone to indicate optimum matching and tuning of the antenna. As the antenna current increases the pitch of the tone which is heard in the headphone drops and reaches its lowest value as the aerial current reaches a maximum.

Also, as part of the packset, there is a lightweight hand-held microphone and a single miniature earpiece which enables the operator to hear commands while listening.

The set uses rechargeable nickel-cadmium batteries which provide not less than six hours of operation on a 10 to 1 receive to transmit ratio at 10 watts pep. and 24 hours of operation at the same receive to transmit ratio for 1 watt pep.

As a ground or vehicle station the R/T unit will operate from any suitable dc source between 20 and 40 volts using the Vehicle Power Supply.

This supply is tolerant of ripple on its dc. input and is protected against transient voltage surges of up to 150V and 20mS duration and against reversed polarity connection to the supply. In addition to providing the full power requirements of the R/T unit, the vehicle supply will simultaneously recharge R/T unit's internal battery at a full charge rate of 100mA or at a trickle charge rate of 20mA. The battery is recharged in 13 hours at 100mA and may be indefinitely trickle charged.

To maintain a supply of charged batteries for the R/T unit a Regulator Battery Charger is provided. It will charge up to 10 batteries at a time on full charge or 8 on trickle charge. It has two discharge positions for battery conditioning if batteries have been left idle for more than six months.

ABRIDGED SPECIFICATION

Channels	10,000 channels at 1 kHz intervals from 2 MHz to 11.999 MHz.
Assigned frequency	Assigned frequency set on four decade tuning dials.
Frequency accuracy	Not more than 25 Hz error at 11.999 MHz.
Power	10 watts pep. into 50 ohms.
Speech modulator	(1) Upper sideband in 2 kHz bandwidth. (2) Compatible am. or transmit and true am. detector on receive with 6 kHz bandwidth.

Telegraph modulation	:	(1) Tone at 2 kHz on upper sideband. (2) Narrow band filter (425Hz) on receive. (3) Bandwidth of 6 kHz on receive with B.F.O.
Sensitivity	:	Audio 1mW for 0.5 µV ssb. or cw. and 2 µV for 30% am. in 50 ohms. Speech-whisper facility on transmit.
Carrier suppression on ssb.	:	At least 40 db below pep.
Sideband rejection	:	At least 50 db below pep. at 3 kHz below the assigned frequency.
Intermodulation	:	For two tone test 3rd order product at least 26 db below either tone.
Image rejection	:	At least 40 db at 11.999 MHz and 60 db at 2 MHz.
Battery endurance	:	At least 6 hrs. at 10 watts pep. for 10 to 1 receive to transmit ratio and 24 hrs. at 1 watt pep. for the same receive to transmit ratio.
Power supply	:	Powered by a 28V rechargeable nickel cadmium battery.
Size	:	13 x 4 3/4 x 12 inches.
Weight	:	Complete manpack station including whip and whip loading inductor, battery, hand-held microphone and miniature ear piece and carrying pack, less than 21 pounds.

Antennae from R/T unit :

(1) 8 ft. whip with tuning inductor tuned by operator and with predetermined matching selected automatically by the MHz dial of the decade tuning system.

(2) Match and tune adjustments for a wire antenna which is adjustable in discrete steps of length and provides a complete range of ¼-wave end-fed antennae.

(3) Match and tune adjustments for a wire dipole of adjustable length.

With the above antennae a tuning tone in the headphone dips to a lowest frequency as the aerial current reaches its maximum value with the optimum tune and match adjustments.

Antennae fed via External Coupler

(1) 16 ft., 27 ft., and 43 ft. vertical antennae.

(2) End-fed ¼-wave and ½-wave wire antennae.

(3) 43 ft. fixed length end fed wire antenna.

The External Coupler may be placed up to 50 ft. away from the R/T unit. The optimum tuning and matching adjustments are shown on a small meter on the Coupler.

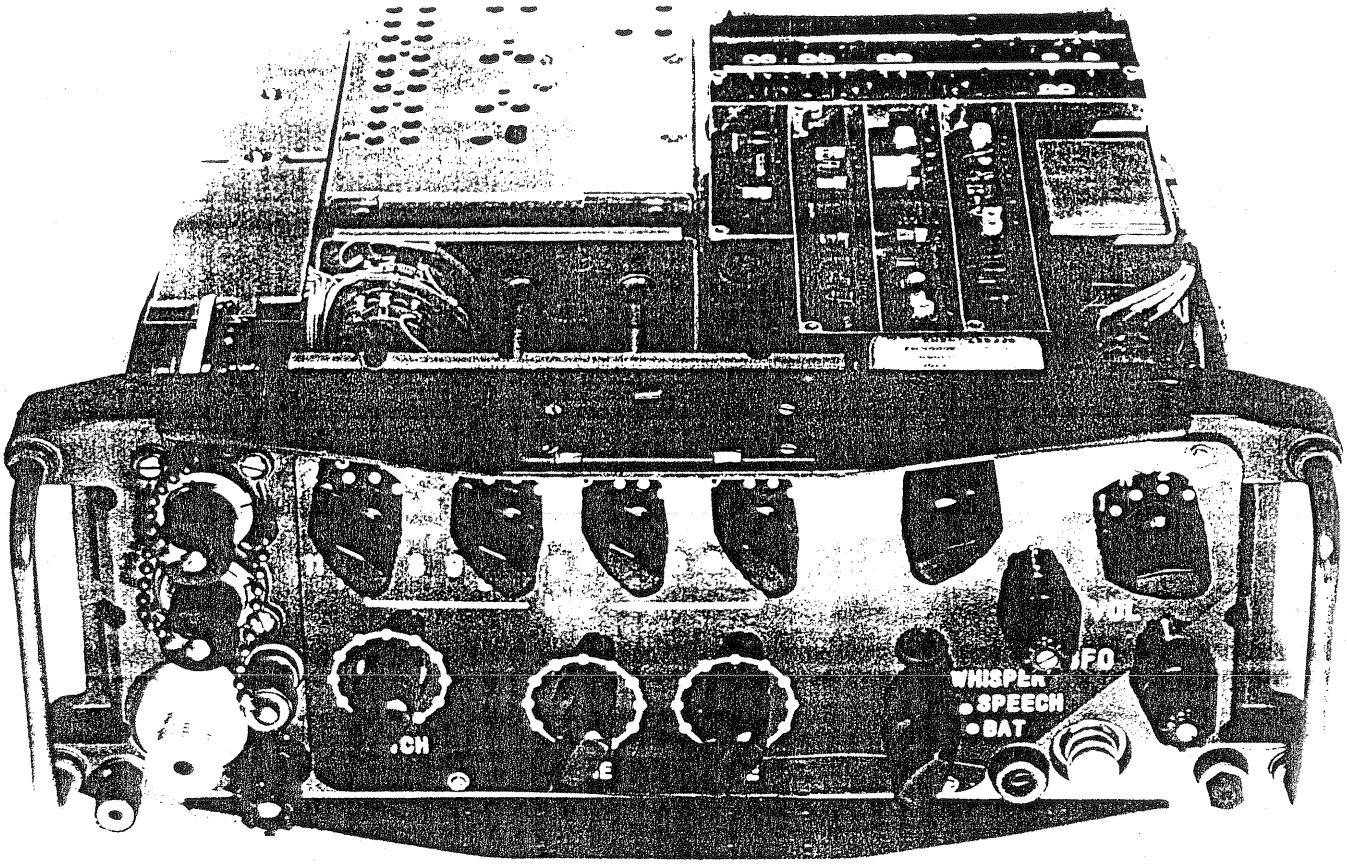
VOL
WHISPER
SPEECH
BAT
CH

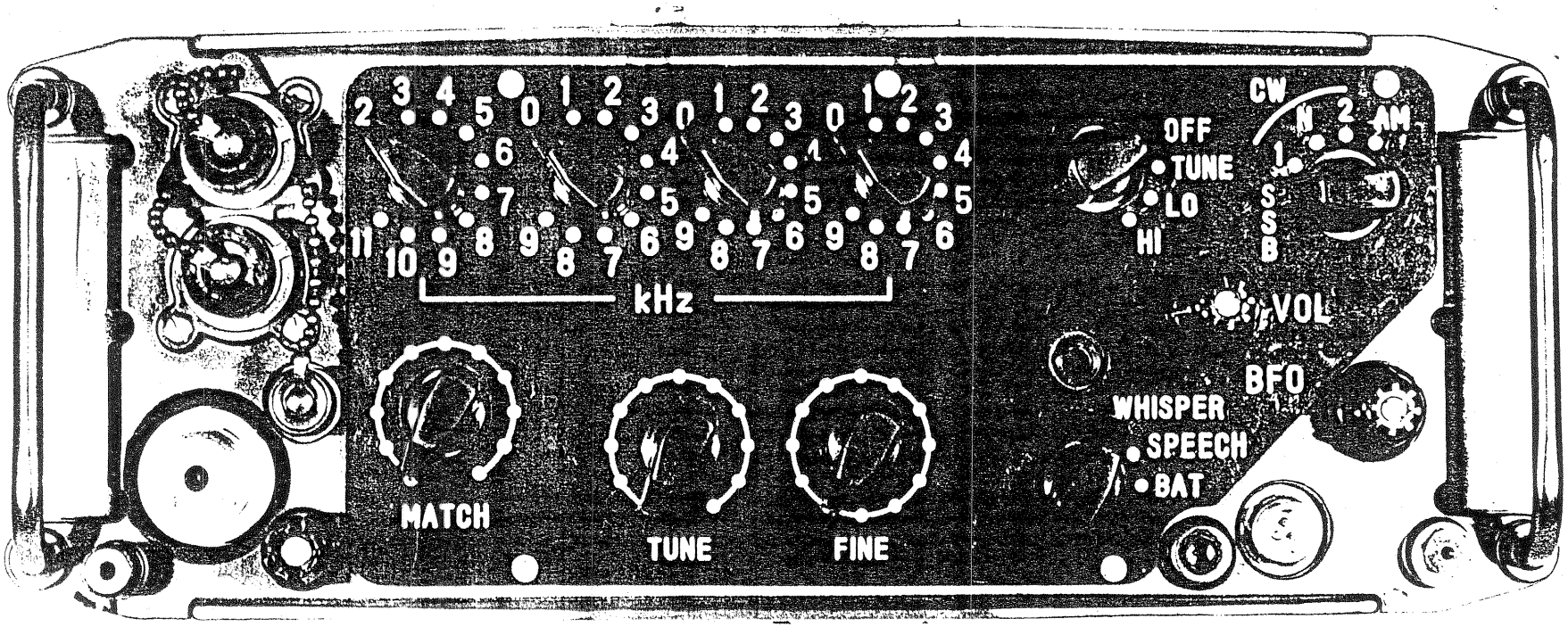
kHz
MATCH
TUNE
FINE
OFF
TUNE
LO
HI
CW
N
2
AM
1
SSB
VOL
BFO
WHISPER
SPEECH
BAT

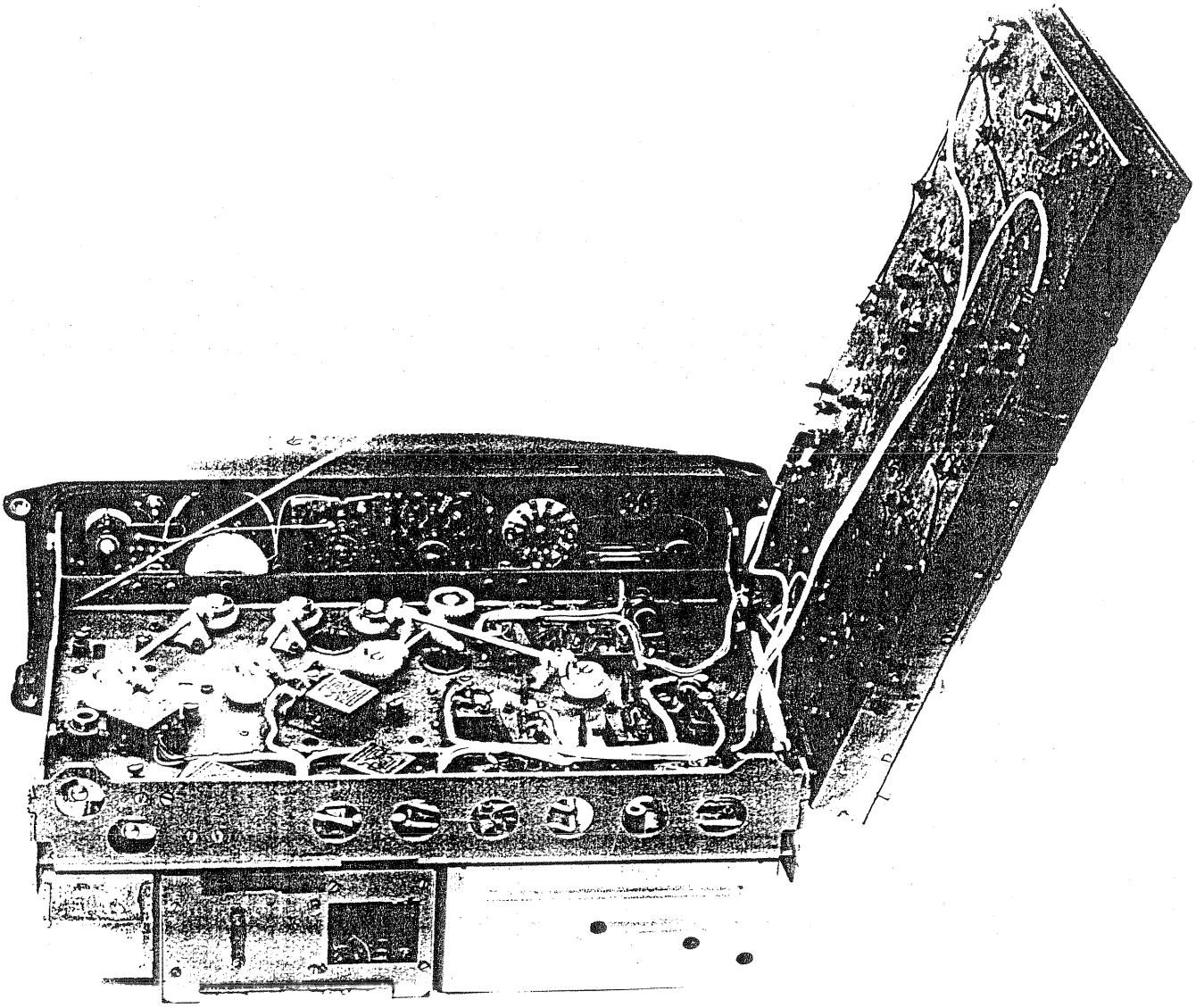

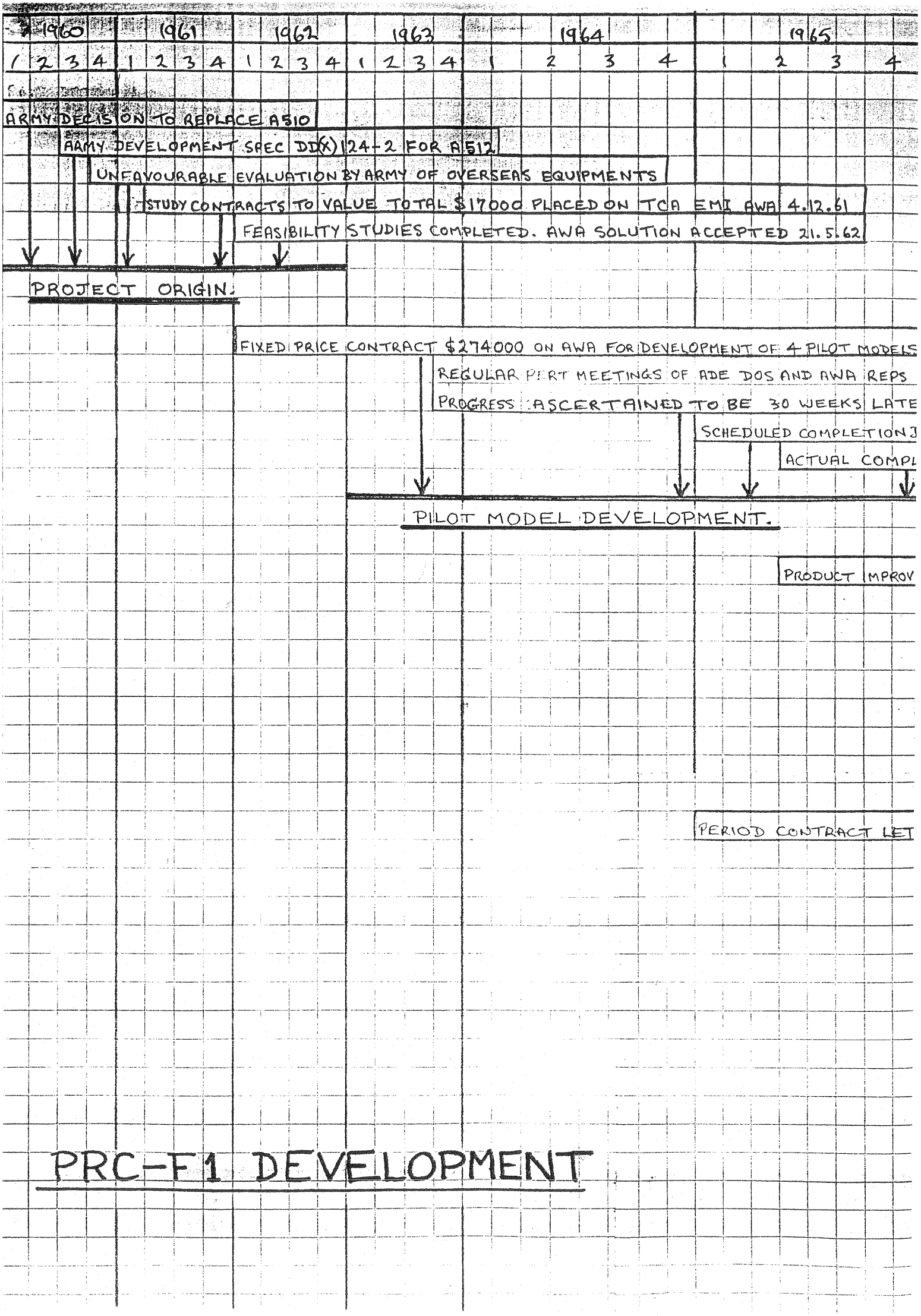

PRC-F1 DEVELOPMENT

1963 | 1964 | 1965 | 1966

1 2 3 4 | 1 2 3 4 | 1 2 3 4 | 1 2 3 4 | 1 2

124-2 FOR A512

BY ARMY OF OVERSEAS EQUIPMENTS

ALUE TOTAL $17000 PLACED ON TCA EMI AWA 4.12.61

STUDIES COMPLETED. AWA SOLUTION ACCEPTED 21.5.62

CONTRACT $274000 ON AWA FOR DEVELOPMENT OF 4 PILOT MODELS 27.8.63

REGULAR PERT MEETINGS OF ADE DOS AND AWA REPS COMMENCE

PROGRESS ASCERTAINED TO BE 30 WEEKS LATE

SCHEDULED COMPLETION DATE FOR PILOT MODELS 12.3.65

ACTUAL COMPLETION DATE PILOT MODELS 1.12.65

PILOT MODEL DEVELOPMENT.

PRODUCT IMPROVEMENT CONTRACT PLACED ON AWA

SCHEDULED COMPLETION

DUE TO ADDITIONAL WOR

EXTENDED CON

PRODUCT IMPROVEM

PERIOD CONTRACT LET FOR MANUFACTURE OF PRECISI

ARMY REQUEST DOS TO SEEK

LETTER OF INTENT TO A

DOS FUND $134,000

AND TOOLING PL

CAPO C101

PROG

VELOPMENT

1966

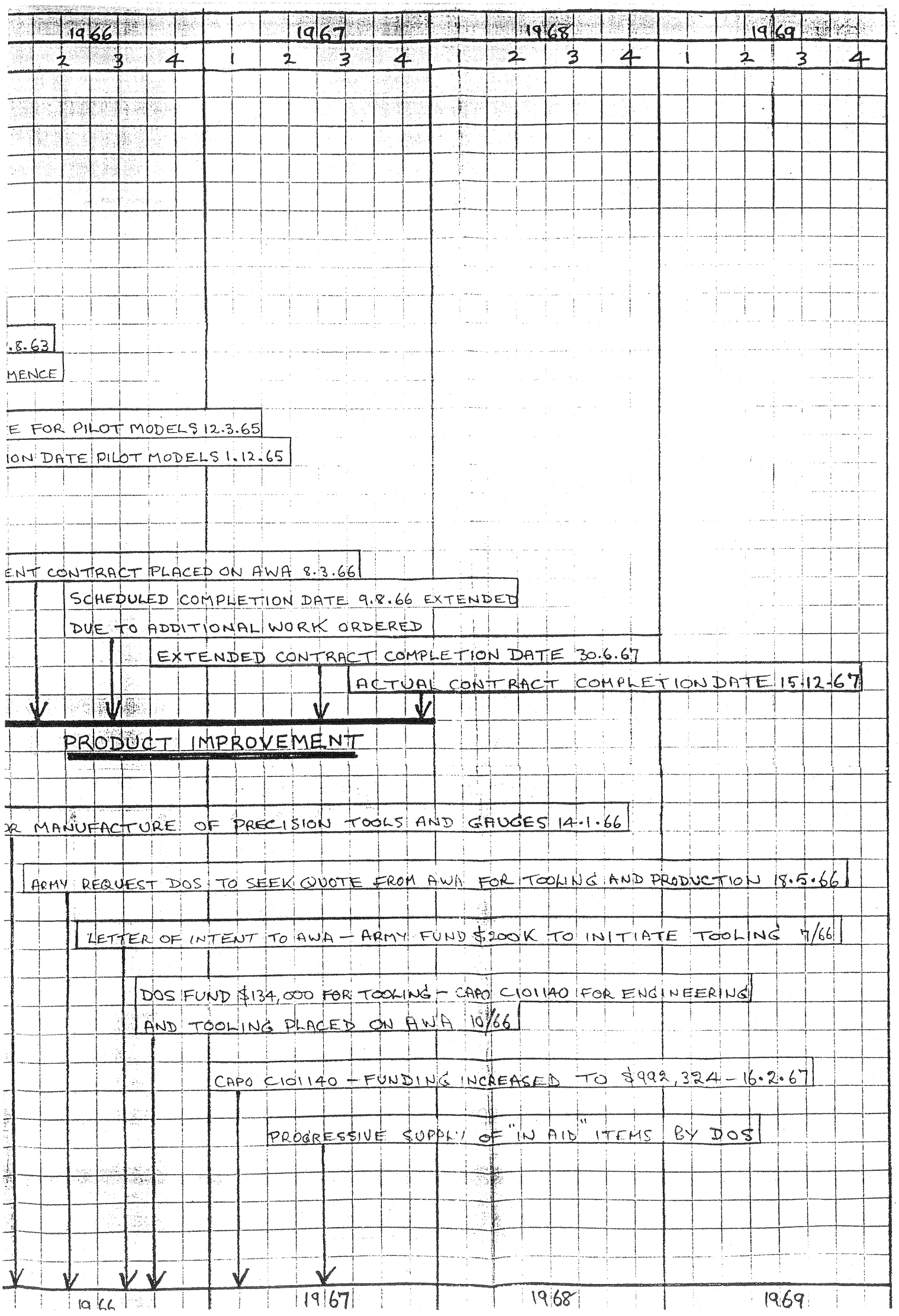
1966
1967
1968
1969
2 3 4 1 2 3 4 1 2 3 4 1 2 3 4
.8.63
MENCE
E FOR PILOT MODELS 12.3.65
ION DATE PILOT MODELS 1.12.65
ENT CONTRACT PLACED ON AWA 8.3.66
SCHEDULED COMPLETION DATE 9.8.66 EXTENDED
DUE TO ADDITIONAL WORK ORDERED
EXTENDED CONTRACT COMPLETION DATE 30.6.67
ACTUAL CONTRACT COMPLETION DATE 15.12.67
PRODUCT IMPROVEMENT
OR MANUFACTURE OF PRECISION TOOLS AND GAUGES 14.1.66
ARMY REQUEST DOS TO SEEK QUOTE FROM AWA FOR TOOLING AND PRODUCTION 18.5.66
LETTER OF INTENT TO AWA – ARMY FUND $200K TO INITIATE TOOLING 7/66
DOS FUND $134,000 FOR TOOLING – CAPO C101140 FOR ENGINEERING
AND TOOLING PLACED ON AWA 10/66
CAPO C101140 – FUNDING INCREASED TO $992,324 – 16.2.67
PROGRESSIVE SUPPLY OF "IN AID" ITEMS BY DOS
1966
1967
1968
1969

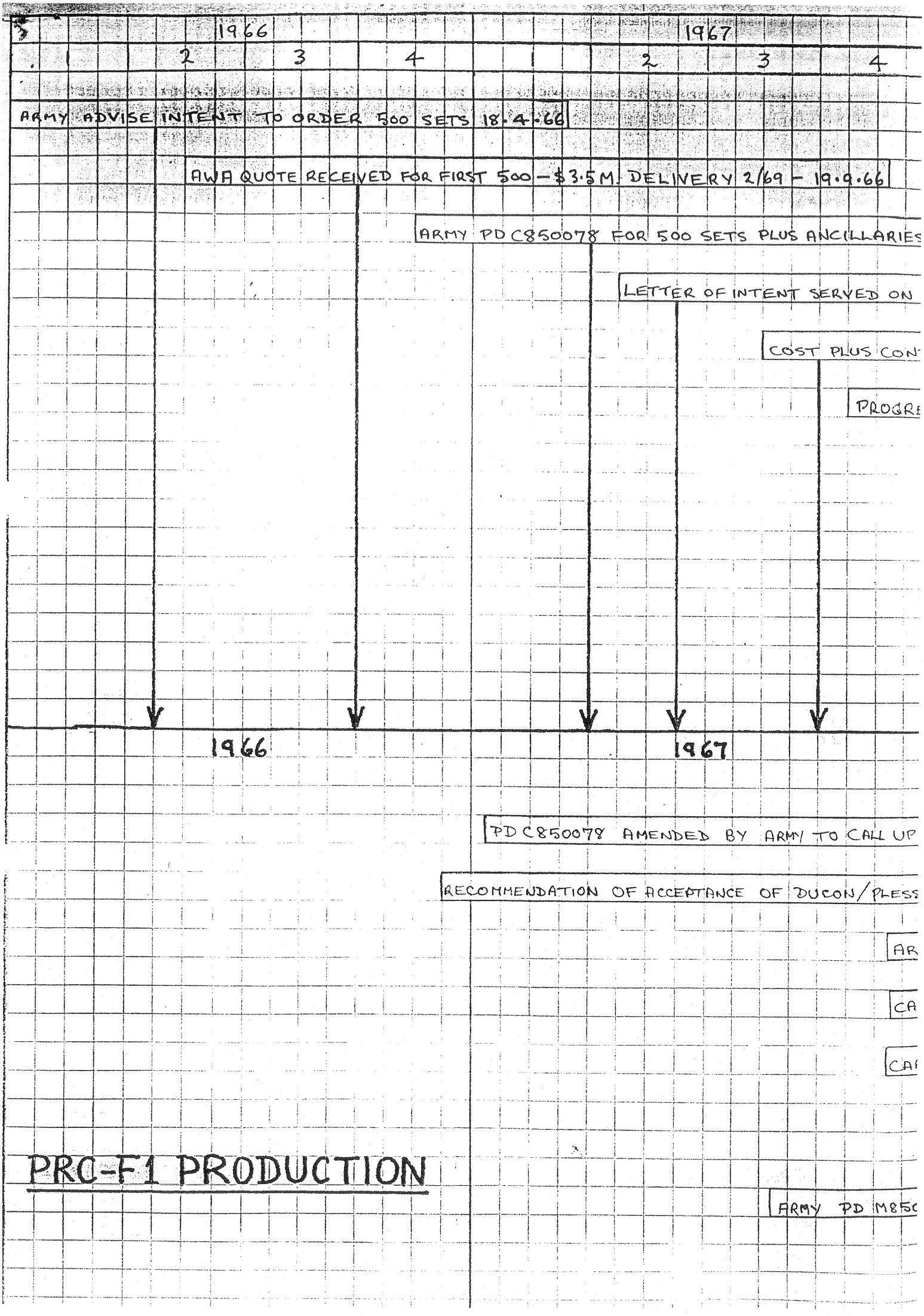

PRC-F1 PRODUCTION

1967 | 1968

4 | 1 | 2 | 3 | 4 | 1 | 2 | 3

500 SETS 18.4.66

ED FOR FIRST 500 – $3.5M. DELIVERY 2/69 – 19.9.66

ARMY PD C850078 FOR 500 SETS PLUS ANCILLARIES RECEIVED – $3.5M – 6.3.67

LETTER OF INTENT SERVED ON AWA BY DOS – ADVANCE MATERIAL C

COST PLUS CONTRACT PLACED ON AWA CAPO C405

PROGRESSIVE DELIVERIES OF "IN AID" ITE

FUNDING ON CAPO C405064 INC

12 PROTOTYPE SETS

ARMY (FDE) AD

FIELD TRIAL COMPLETED BY 8/68

1967 | 1968

PD C850078 AMENDED BY ARMY TO CALL UP LATEST REVISED DD(X) SPECIFICATIO

RECOMMENDATION OF ACCEPTANCE OF DUCON/PLESSEY TENDER FOR STUDY OF RAPID E

ARMY PDC850092 FOR 2ND 500 SETS

CAPO N145086 $10,695 PLACED ON ST

CAPO N143851 PLACED ON AWA $955,500

ARMY REQUEST FOR A DES RECOMMENDATION FOR PLACEM

ION

ARMY PD M850119 ISSUED – $35000 – FOR PHASE I OF

SOLU

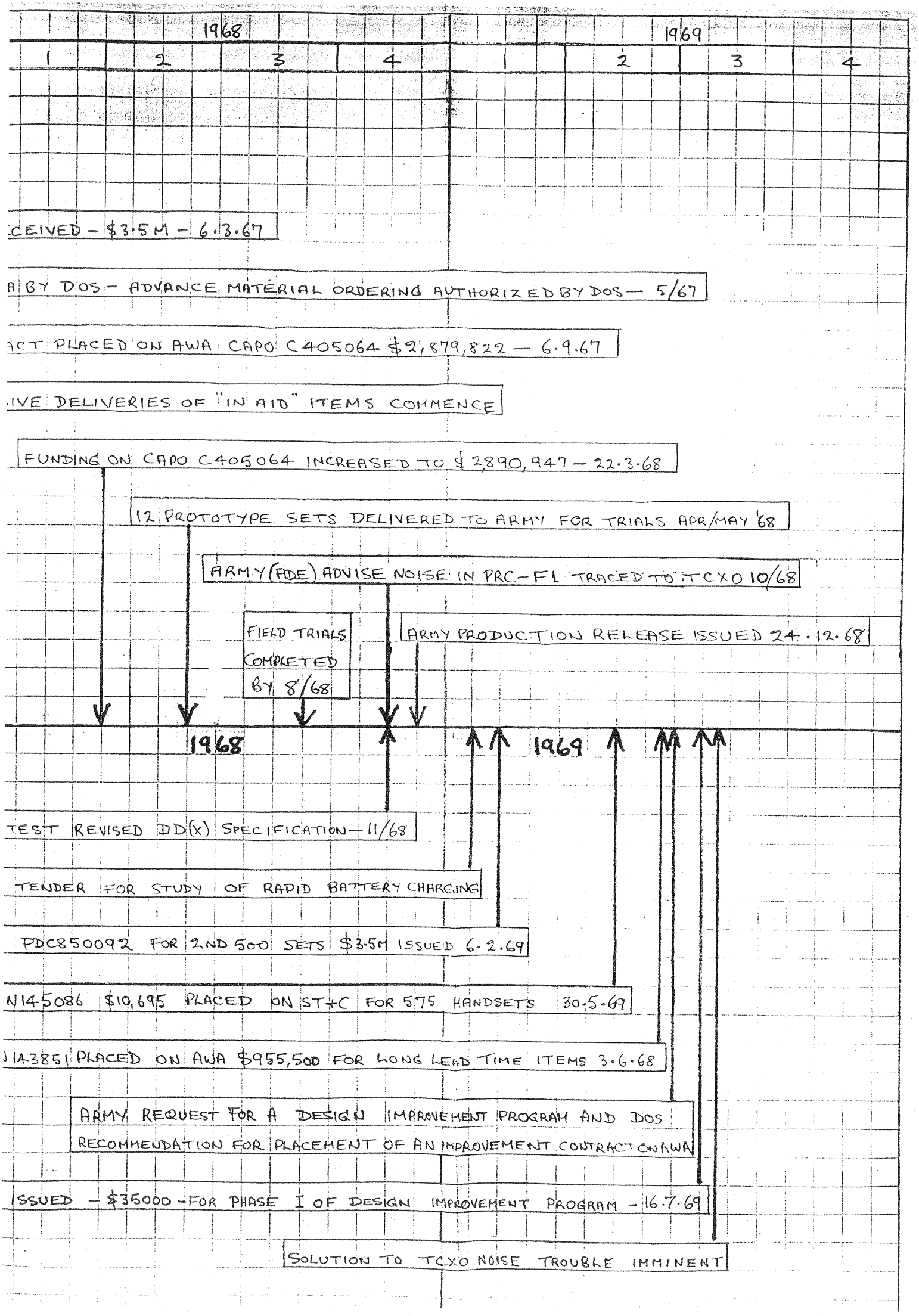
1968
1969
1
2
3
4
1
2
3
4
CEIVED – $3.5 M – 6.3.67
A BY DOS – ADVANCE MATERIAL ORDERING AUTHORIZED BY DOS – 5/67
ACT PLACED ON AWA CAPO C405064 $2,879,822 – 6.9.67
IVE DELIVERIES OF "IN AID" ITEMS COMMENCE
FUNDING ON CAPO C405064 INCREASED TO $2,890,947 – 22.3.68
12 PROTOTYPE SETS DELIVERED TO ARMY FOR TRIALS APR/MAY '68
ARMY (ADE) ADVISE NOISE IN PRC-F1 TRACED TO TCXO 10/68
FIELD TRIALS COMPLETED BY 8/68
ARMY PRODUCTION RELEASE ISSUED 24.12.68
1968
1969
TEST REVISED DD(X) SPECIFICATION – 11/68
TENDER FOR STUDY OF RAPID BATTERY CHARGING
PDC850092 FOR 2ND 500 SETS $3.5M ISSUED 6.2.69
N145086 $10,695 PLACED ON ST+C FOR 575 HANDSETS 30.5.69
J 14385 PLACED ON AWA $955,500 FOR LONG LEAD TIME ITEMS 3.6.68
ARMY REQUEST FOR A DESIGN IMPROVEMENT PROGRAM AND DOS RECOMMENDATION FOR PLACEMENT OF AN IMPROVEMENT CONTRACT ON AWA
ISSUED – $35000 – FOR PHASE I OF DESIGN IMPROVEMENT PROGRAM – 16.7.69
SOLUTION TO TCXO NOISE TROUBLE IMMINENT

CU-F2 Antenna Coupler for PRC-F1

A 116

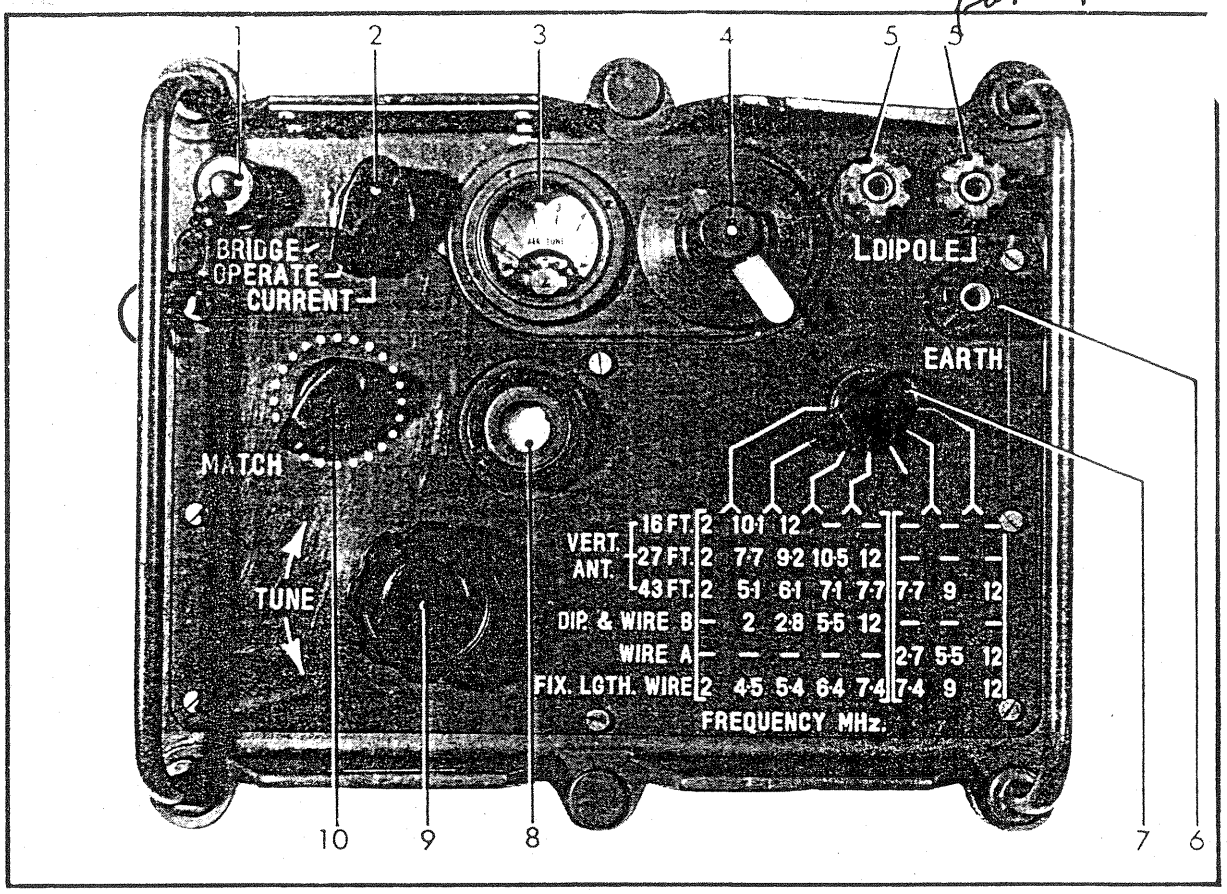

FIG 28 FRONT PANEL - COUPLER ANTENNA, CU-F2

SECTION 9

POWER SUPPLY, PP-F1 CONTROLS AND ASSOCIATED ITEMS ON FRONT PANEL

General

68. This section describes the type, location and function of the control, connectors and associated items located on the front panel. The items are illustrated in Fig 29, and described in Table 6.

TABLE 6— POWER SUPPLY, PP-F1 TYPE AND FUNCTION OF CONTROLS ETC

Item No	Control/Connector Etc	Function
1	Charging Rate Switch	Two position toggle switch used to select the charging rate for the internal battery of the receiver-transmitter. The charging rates are: TRICKLE : 20 mA. FULL : 100 mA.

GROUP A

RPS 22113

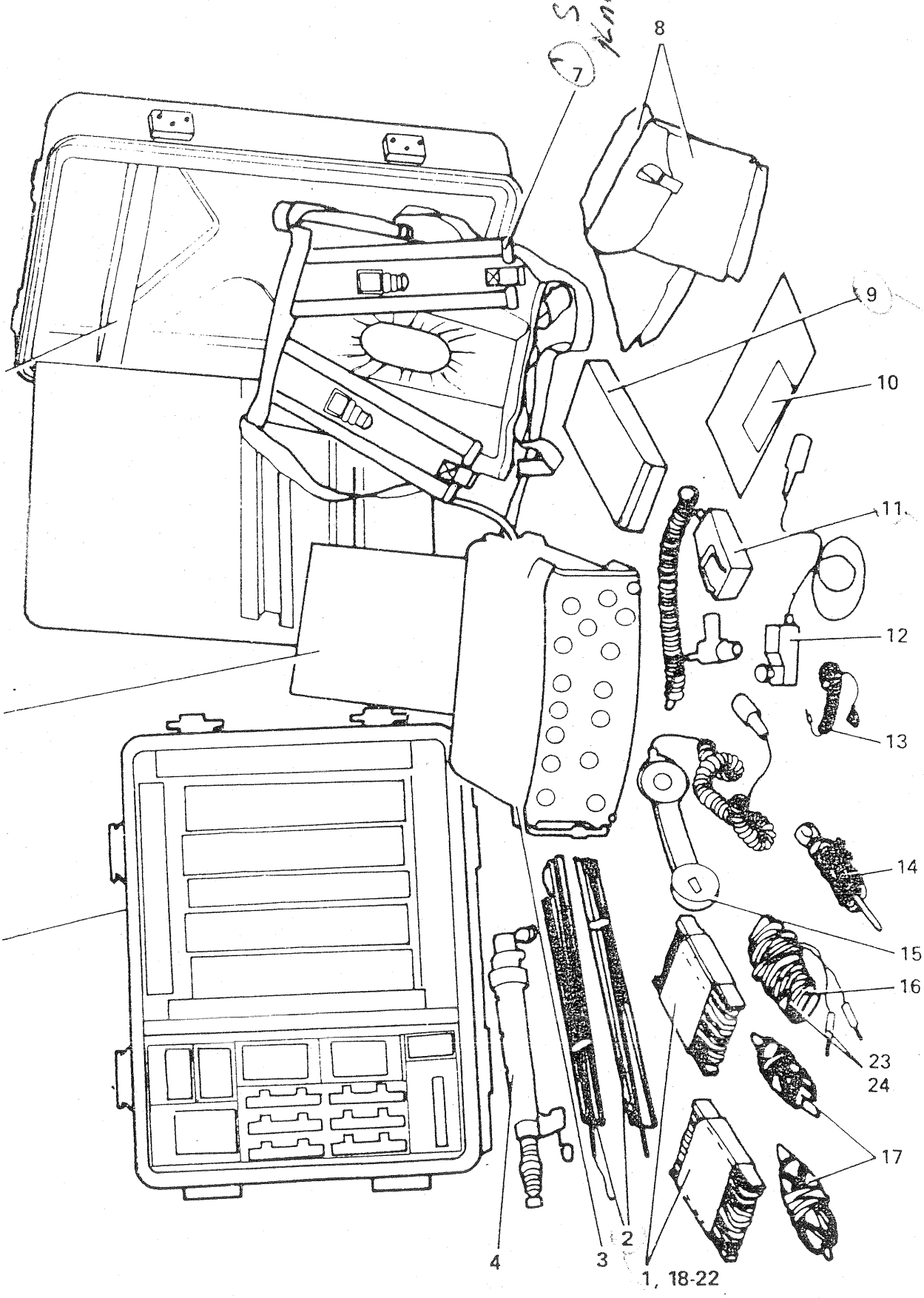

RADIO SET, PRC-F3

GROUP D TC 819

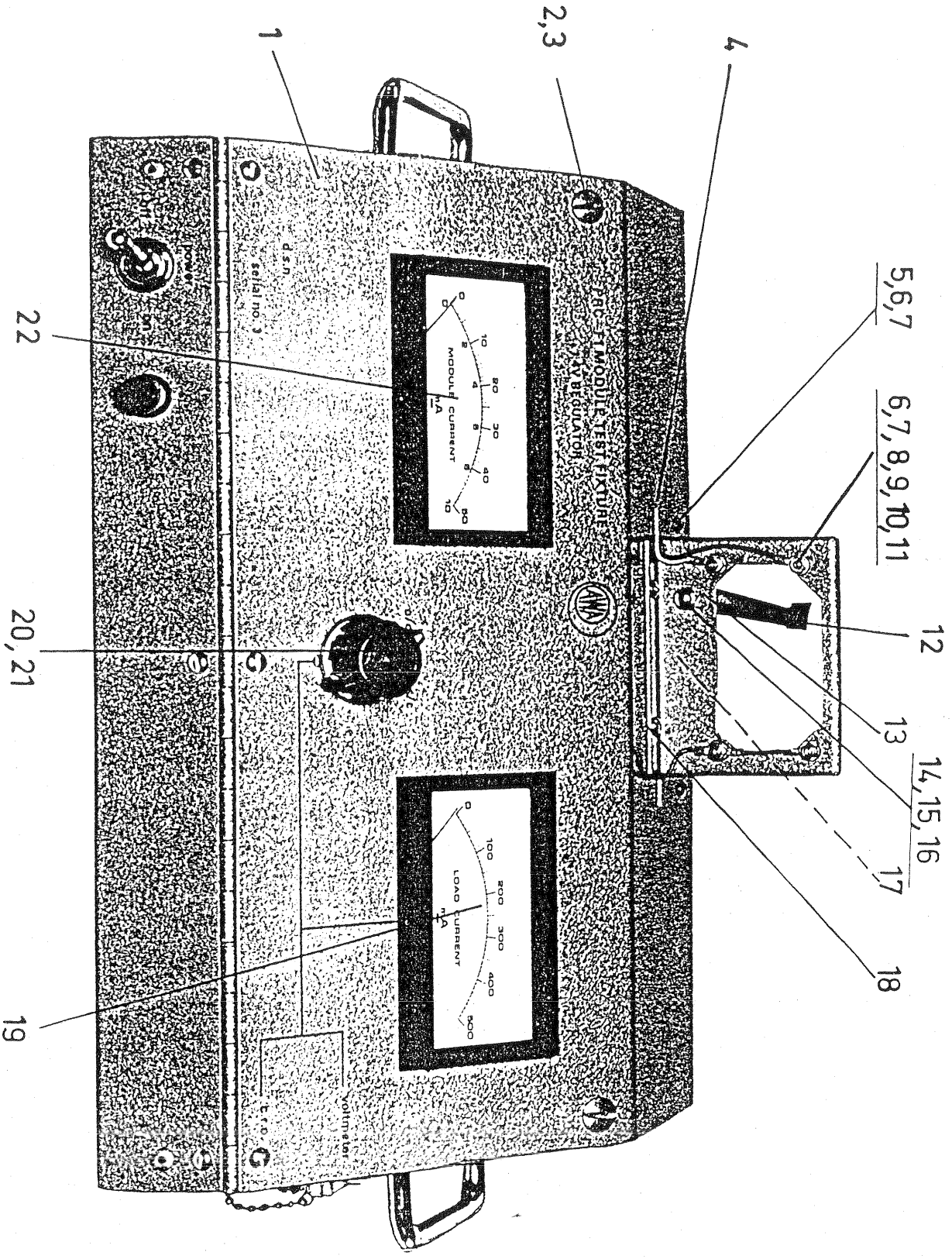

1.4 v regulator

GROUP E TC 819

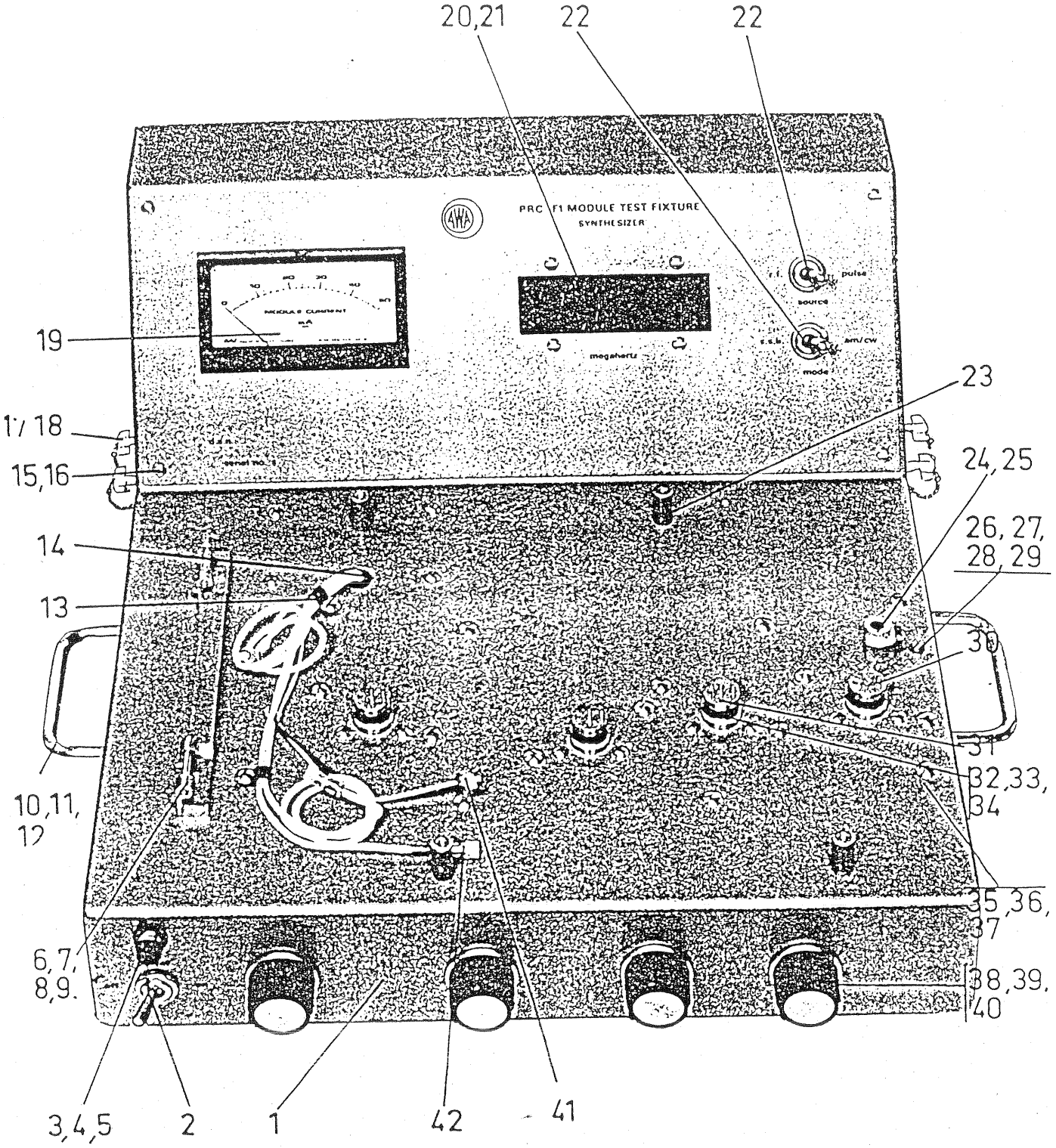

frequency synthesizer

c. Immerse the unit in water (containing a small amount of wetting agent) for a period of five minutes.
d. Check for the presence of bubbles at switch shafts and connectors. During immersion, check the case and front panel for pinholes, cracks or joint leakage.
e. If a defect is observed replace the faulty seal or part and repeat the test.

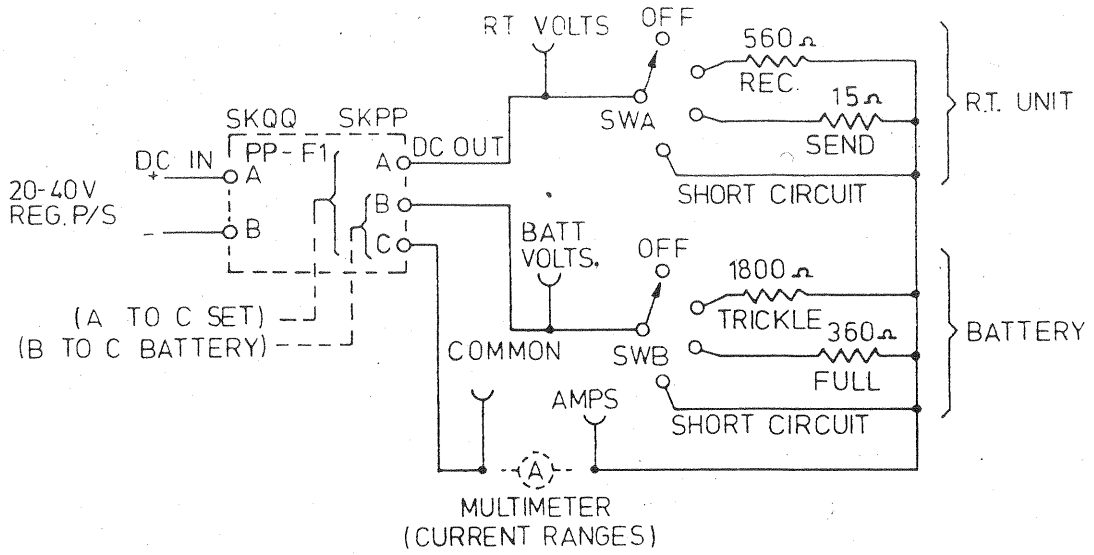

FIG 2 – DUMMY LOAD ELECTRICAL DA–F4 (CIRCUIT)

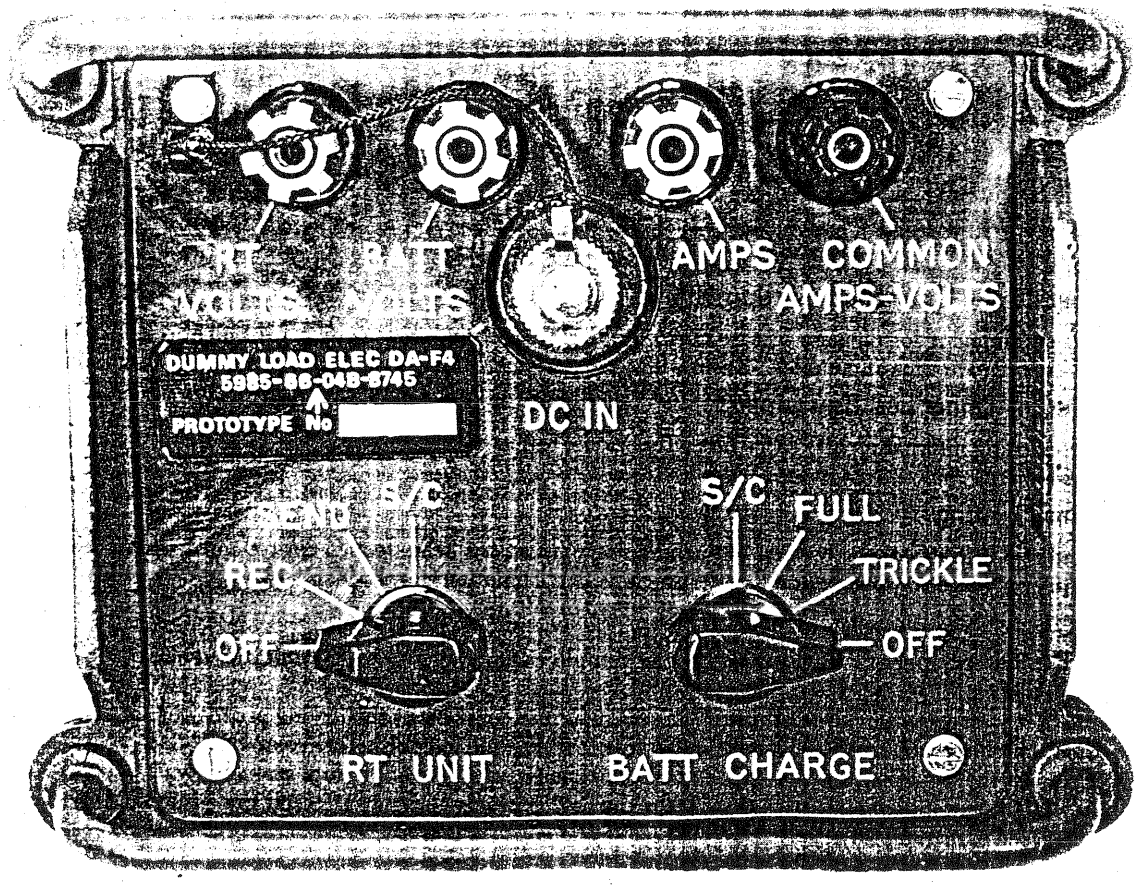

FIG 3 – DUMMY LOAD ELECTRICAL DA–F4 (FRONT PANEL)

Control, indicator, or connector	Function
	Sq Pos — *Action* OLD-OFF — No squelch. OLD-ON — Noise-operated squelch. NEW-OFF — No squelch. NEW-ON — Squelch operated by tone from distant transmitter.
VOLUME control	Adjust audio output.
RETRANSMIT R/W MIKE connector	Connection for retransmission with certain other types of radio sets; connection for microphone.
SPKR MIKE connector.	Connections for audio output or microphone input.
ANT CONT connector	Connection for control cable to MX-2799/VRC.

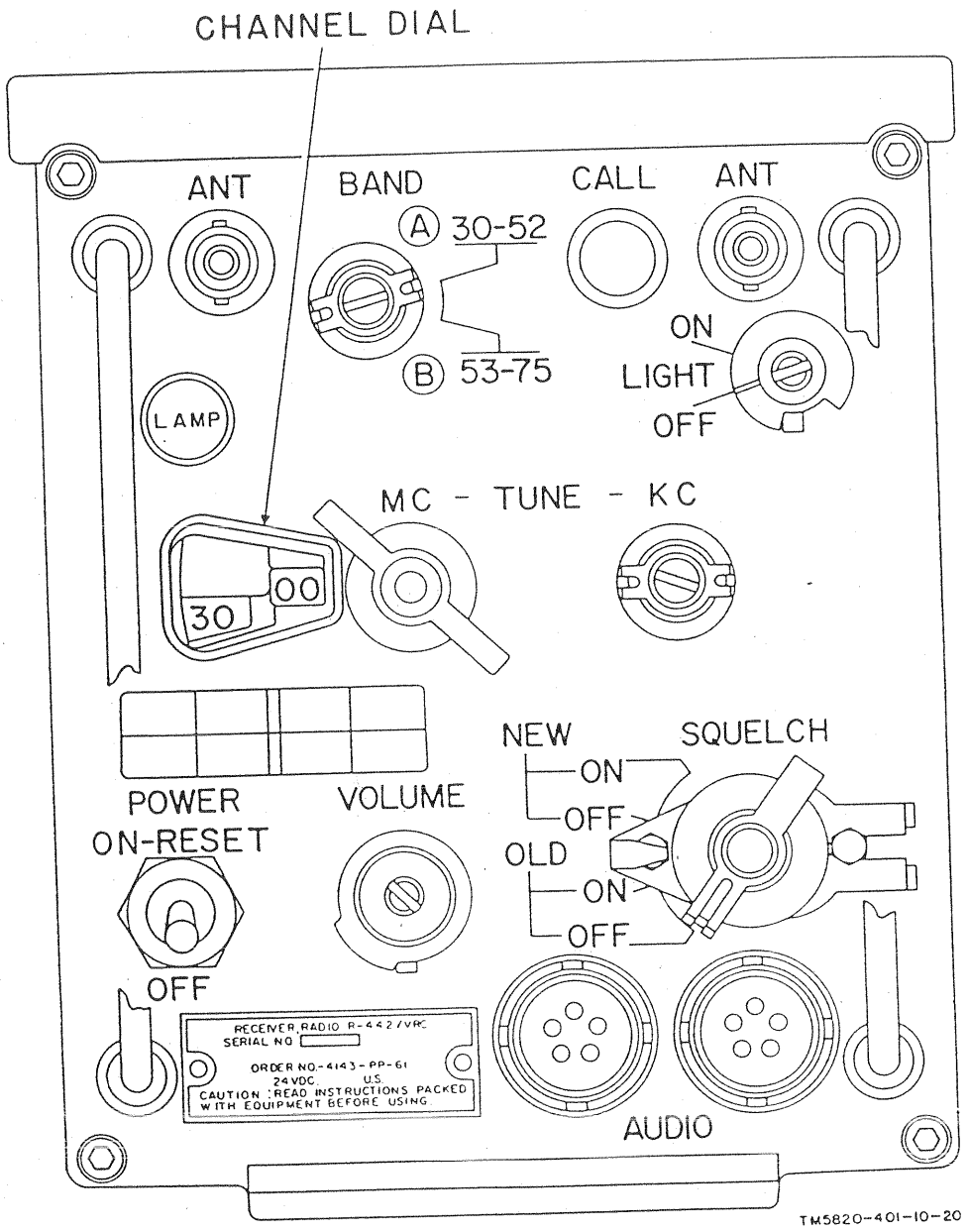

Figure 20. Receiver, Radio R-442/VRC, controls, indicators, and connectors.

TEST SET RADIO IFR FM/AM 500/AA
PERFORMANCE TEST CARDS FOR PRC F3

PRC F3 TRANSMITTER POWER TEST

Performance:

The transmitter power is to conform to the power listed in the following Table.

RF FREQUENCY	AF MODULATION	MODE	RF POWER
2.0 MHz	2.8 kHz	SSB/HI	9 W min
3.5 MHz	2.8 kHz	SSB/HI	9 W min
5.0 MHz	2.8 kHz	SSB/HI	9 W min
7.0 MHz	2.8 kHz	SSB/HI	8 W min
11.5 MHz	2.8 kHz	SSB/HI	7 W min
2.0 MHz	2.8 kHz	SSB/LO	0.5 W min
2.0 MHz	- - - -	CW1/HI	5 W min
7.0 MHz	- - - -	CW1/HI	5 W min
11.5 MHz	- - - -	CW1/HI	4 W min
2.0 MHz	- - - -	CW1/LO	0.5 W min
2.0 MHz	2.8 kHz	AM/HI	4.5 W min
7.0 MHz	2.8 kHz	AM/HI	4.5 W min
11.5 MHz	2.8 kHz	AM/HI	3.5 W min
2.0 MHz	2.8 kHz	AM/LO	0.3 W min

Test:

1. Set the F3 to SSB HI power.
2. Connect the F3 to the T/R connector (No 5) of the 500A.
3. Set the F3 to the required frequency.
4. Set the RF thumbwheels to the same frequency as the F3.
5. Set switch No 26 to REC.
6. Set switch No 19 to 10K.
7. Set switch No 4 to AVG 15.
8. Set switch No 14 to ON.
9. Set the audio thumbwheels to 2.8 kHz and adjust control No 13 to produce a 3.4 mV signal measured at connector No 10.
10. Connect the adaptor unit to the F3 and the output from connector No 10 to the audio input.
11. Set the F3 to transmit and read the power on meter No 1.
12. For the CW1 test set switch No 14 OFF to disconnect the 2.8 kHz.
13. Repeat the test for the frequencies and modes listed in the Table.

PRC F3 TRANSMITTER FREQUENCY ACCURACY TEST

Performance:

The transmitter frequency for the various modes is not to exceed the following:

CW	2000 kHz to 2009 kHz	- ± 4 Hz
CW	10000 kHz	- ± 20 Hz
SSB	2000 kHz (AF 2 kHz)	- ± 4 Hz

Test:

1. The initial settings for the F3 are as follows:
   a. Match, Tune and Fine controls to 0,
   b. Power switch to high,
   c. Mode switch to CW1,
   d. Whisper Speech switch to speech, and
   e. Frequency to 2000 kHz.
2. Connect the F3 to the T/R connector (No 5) of the 500A.
3. Set the RF thumbwheels (No 25) to 2000 kHz.
4. Set switch No 26 to REC.
5. Set switches No 14 and 15 to OFF.
6. Set switch No 4 to AVG 15.
7. Set the Frequency Error Range switch (No 19) to 10 kHz.
8. Set the F3 to transmit.
9. The Frequency error is read off meter No 21.
10. For greater accuracy set switch No 19 to a lower setting.
11. Repeat the test fo 10000 kHz.
12. Set the F3 mode switch to SSB.
13. Set switch No 14 to ON and adjust the audio thumbwheels to 2 kHz.
14. Adjust the audio control No 13 to produce an output of 3.4 mV at connector No 1(
15. Connect the output to the audio input of the adaptor unit.
16. Set the frequency of the F3 and 500A to 2000 kHz.
17. Set the F3 to transmit.
18. The error is read on meter No 21.

PRC F3 RECEIVER SIGNAL PLUS NOISE TO NOISE TEST

Performance:

For an RF input of 0.5 uV on SSB and CW or an input of 2 Uv on AM the S+N/N ratio for SSB and CW 1 is to be 10dB, for CWN 18db and for CW 2 and AM 7dB.

Test:

1. The initial settings for the F3 are:
   a. power switch to LOW,
   b. match, tune and fine controls to 0,
   c. mode switch to SSB, and
   d. frequency to 2500 kHz.
2. Connect the F3 to the T/R connector of the 500A.
3. Connect the adaptor unit to the F3.
4. Connect a DVM to the audio terminals of the adaptor unit and connect 100 ohms across the terminals.
5. Set switch No 15 OFF.
6. Set switch No 14 ON.
7. Set the variable tone frequency to 2 kHz.
8. Set the variable tone level control to mid range.
9. Set the RF frequency to 2500 kHz.
10. Set the RF level to 0.5 uV.
11. Set switch No 26 to GEN.
12. Adjust the F3 volume control to give a reading of 0.316 V on the DVM.
13. Set switch No 26 to REC. The DVM reading should drop to 100 mV or less indicating a 10dB drop.
14. Set the F3 mode to CW 1 and repeat paragraphs 6 - 13. The DVM should drop to 100 mV.
15. Set the F3 mode to CWN and repeat paragraphs 6 - 13. The DVM should drop to 40 mV or less indicating 18dB.
16. Set the F3 mode to CW2 and repeat paragraphs 6 - 13. The F3 BFO control is to be adjusted to the required 2 kHz. The DVM reading should drop to 140 mV.
17. Set the F3 mode to AM and switch No 14 to OFF.
18. Set switch No 15 to INT MOD.
19. Set switch No 4 to 6 and adjust the 1 kHz tone level to 30% modulation on the modulation meter.
20. Adjust the F3 volume control to give 0.316 on the DVM.
21. Set switch No 15 to OFF. The DVM reading should drop to 140 mV.
22. Repeat the tests at 3.5, 4.5, 5.5, 6.5, 7.5, 8.5, 9.5 and 11.5 MHz.

PRC F3 RECEIVER AGC TEST

Performance:

The audio output is not to exceed 12dB with an increase in the RF input between 0.5 uV and 10 uV. The audio output is not to increase 3dB above the previous reading with an increase in RF between 10 uV and 100 uV.

Test:

1. The initial settings of the F3 are as for the Signal plus Noise to Noise test.
2. Connect the F3 to the T/R connector of the 500A.
3. Connect the adaptor unit to the F3.
4. Connect a DVM across the audio output terminals of the adaptor unit and connect 100 ohm across the terminals.
5. Set the RF thumbwheels to 2500 kHz.
6. Set the RF level to 0.5 uV.
7. Set switch No 26 to GEN.
8. Adjust the F3 volume control to give 100 mV on the DVM.
9. Increase the RF input to 10 uV and record the reading on the DVM.
10. The increase should not exceed 400 mV.
11. Increase the RF input to 100 uV and record the reading on the DVM.
12. The increase should not exceed 140 mV above the reading in paragraph 9.
13. Set the F3 to CWN, CW2 and AM respectively and repeat the test.
14. In the Am test modulate the RF input with 1 kHz modulated to 80%.
15. In the CW2 test the BFO control is adjusted to produce an output of approximately 2 kHz.

PRC F3 RECEIVER DISTORTION TEST

Performance:

The receiver output distortion is not to exceed 6% for the following:

a. SSB 1 mV input with 1 mW output.

b. AM 1 mV input, modulated by 1 kHz to 80%, with 2 mW output.

Test:

1. The initial settings for the F3 are as for the previous test.
2. Set the 500A frequency to 2.499 kHz.
3. Set the RF level to 1 mV.
4. Set switch No 26 to GEN.
5. Set the F3 volume control to give a 316 mV across the audio output terminals.
6. Connect the audio output terminals to connector No 7.
7. Set switch No 4 to DIST and read the distortion on the meter.
8. Set the F3 mode to AM.
9. Set switch No 15 to INT MOD.
10. Set switch No 4 to 20.
11. Adjust the Tone Level control (No 16) give a modulation of 80%.
12. Set switch No 26 to GEN.
13. Set the F3 volume control to give a 316 mV across the audio output terminals.
14. Connect the audio output terminals to connector No 7.
15. Set switch No 4 to DIST and read the distortion on the meter.

TEST SET RADIO IFR FM/AM 500/AA
PERFORMANCE TEST CARDS FOR RT-524/VRC

RT-524/VRC SPECIFICATION TEST USING THE FM/AM-500/AA

524 TRANSMITTER POWER OUTPUT TEST

Performance:

The radio will produce at least 1 Watt min on low power and 35 Watts on high power.

Test:

1. The initial setting of the 524 front panel controls are:

Light	On
Band	A
Freq	30.00 MHz
Power	Low
Squelch	Old Off
Volume	Max Anti Clockwise
Speaker	Off

2. Connect the 524 antenna socket to the 500A and set switch No 26 to REC
3. Connect the adaptor unit to the Speaker socket of the 524.
4. Set the Modulation range switch (No 4) to AVG 15.
5. Switch the 524 to transmit and read the power on the modulation meter
6. Set the power switch of the 524 to High and the Modulation Range Switch to AVG 150.
7. Switch the 524 to transmit and read the power.
8. Repeat the test at 42, 52.95, 53, 65 and 75.95 MHz.

524 TRANSMITTER FREQUENCY ACCURACY TEST

Performance:

The transmitter output frequencies are to be within ± 3 kHz of the dial frequency.

Test:

1. Set the 524 controls as stated in paragraph 1 of the Power test.
2. Set switch No 4 to AVG 15.
3. Set the RF Thumbwheels (No 25) to 30.00 MHz.
4. Set switch No 26 to REC.
5. Set the Frequency Error Range Switch (No 19) to RF 10K.
6. Switch the 524 to Transmit and read the error on Meter No 21.
7. For greater accuracy set switch No 19 to a lower setting.
8. Repeat the test at 42, 52.95, 53, 65, 75.05 and 75.95 MHz and at the 100 kHz points for 53 MHz, eg, 53.10, 53.20 etc.

524 TRANSMITTER VOICE DEVIATION TEST

Performance:

An audio input of 1.5 mV to 7.5 mV applied at the microphone input terminals shall produce a deviation of 8 kHz ± 2 kHz (Squelch at OLD ON).

With the same input and the squelch at NEW ON, the deviation shall be 9 kHz ± 3 kHz.

Test:

1. Initial settings of the 524 are as per paragraph 1 of the Power test.
2. Set switch No 4 to the 20 range.
3. Set switch No 9 to FM.
4. Set the RF thumbwheels to 30 MHz.
5. Set switch No 15 to INT MOD and adjust control No 16 to produce an output measured at Connector No 10 of between 1.5 and 7.5 mV.
6. Set the squelch switch of the 524 to OLD ON.
7. Connect the Tone Out connector to the microphone input of the adaptor unit.
8. Set the 524 to transmit and read the deviation on Meter No 1.
9. Change the squelch switch to the NEW ON Position.
10. Set the 524 to transmit and read the deviation on the Meter No 1.

524 RECEIVER SENSITIVITY TEST

Performance:

With an RF input of 0.46 uV, modulated by 1 kHz at a deviation of 8 kHz shall produce a SINAD reading of 10 dB or better.

Test:

1. Initial settings of the 524 are as per paragraph 1 of the power test.
2. Set switch No 26 to GEN and the volume control on the 524 to max.
3. Set the RF Level controls to 0.46 uV.
4. Set switch No 7 to FM.
5. Set switch No 4 to 20.
6. Set switch No 15 to INT MOD.
7. Adjust control No 16 to produce 8 kHz deviation as read on Meter No 1.
8. Connect the adaptor unit to the Speaker terminal of the 524.
9. Connect the output of the adaptor unit to the EX MOD/SINAD connector (No 7).
10. Set switch No 4 to SINAD and read the level on Meter No 1.
11. Repeat the test at 41, 52, 53, 65 and 75 MHz.

524 RECEIVER BANDWIDTH TEST

Performance:

The 524 receiver bandwidth measured at the audio output shall be 18 kHz ± 2 kHz at the 2 dB points.

Test:

1. Set the 524 and 500AA as for the Receiver Sensitivity test.
2. Adjust the volume control of the 524 to give 1 Vac on the DVM.
3. Set the RF Error switch to 10 kHz and move the GEN LOCK control from lock through centre zero (+ and -) to obtain a reading of 0.707 Vac on the DVM. These points must occur within the limits of the Frequency Error meter.
4. Repeat the test at each Receiver Sensitivity test.

524 RECEIVER NOISE OPERATED SQUELCH TEST

Performance:

An RF input of less than 0.7 uV modulated by 1 kHz for a deviation of 8 kHz shall operate the call light and unmute the receiver.

Test:

1. Initial settings of the 524 are as per paragraph 1 of the power test.
2. Set the squelch switch to OLD ON, Speaker ON and volume control to Mid range.
3. Set the RF Thumbwheels to 30 MHz and switch No 26 to GFN.
4. Set switch No 9 to FM.
5. Set switch No 4 to 20.
6. Set switch No 15 to INT MOD and adjust control No 16 to produce 8 kHz deviation on Meter No 1.
7. Increase the RF Level controls from their minimum position until the Call light on the 524 comes on.
8. The RF level should be less than 0.7 uV.

524 RECEIVER TONE OPERATED SQUELCH TEST

Performance:

An RF input of less than 0.5 uV modulated by 150 Hz for 3 kHz deviation shall operate the call light and unmute the receiver.

Test:

1. Initial settings of the 524 are as for the paragraph 1 of the power test.
2. Set the 524 squelch switch to NEW ON, Speaker ON and volume control to Mid range.
3. Set switch No 15 OFF and switch No 14 ON.
4. Adjust the audio thumbwheels (No 18) to 150 Hz.
5. Set switch No 4 to 6 and adjust control No 13 to produce 3 kHz deviation on Meter No 1.
6. Increase the RF level controls from their minimum position until the Call light on the 524 comes on.
7. The RF level should be less than 0.5 uV.

524 RECEIVER AUDIO OUTPUT AND DISTORTION TEST

Performance:

An RF input of 10 uV modulated by 1 kHz to a deviation of 8 kHz shall produce an audio output of 500 mW with less than 8% distortion.

Test:

1. Initial settings of the 524 are as per paragraph 1 of the power test.
2. Set the RF Level controls to 10 uV.
3. Set switch No 4 to 20.
4. Set switch No 9 to FM.
5. Set switch No 15 to INT MOD and adjust control No 16 to produce 8 kHz.
6. Connect a DVM across the audio output terminals (A & B) of the adaptor unit and adjust the 524 volume control for a 10 Vac output.
7. Connect the output of the adaptor to connector No 7 and set switch No 4 to DIST.
8. The distortion reading should be less than 8%.

TEST SET RADIO IFR FM/AM 500/AA
PERFORMANCE TEST CARDS FOR AN/PRC 77

PRC 77 TRANSMITTER RF POWER OUTPUT

Performance:

The radio will produce at least 1.6 watts across the frequency range of the radio.

Test:

1. Connect the 77 set antenna socket to the 500A T/R connector (No 5).
2. Set the GEN/REC switch (No 26) to REC.
3. Set the MOD METER switch (No 4) to AVG 15.
4. Set the RF thumbwheels (No 25) and the 77 set to 30 MHz.
5. Set the 77 set to transmit and read the power on the MOD METER (No 1).
6. Repeat the test at 42, 52.95, 53, 65 and 75.95 MHz.

PRC 77 TRANSMITTER FREQUENCY ACCURACY TEST

Performance:

The radio will have an accuracy of ± 3 kHz across the frequency range.

Test:

1. Connect the 77 set to the T/R connector of the 500A.
2. Set the RF Thumbwheels (No 25) and the 77 set to 30 MHz.
3. Set the RF Error Range switch (No 19) to RF 10K.
4. Set Gen/Rec switch (No 26) to REC.
5. Set the 77 set to transmit.
6. Add or subtract the error reading on the Frequency Error Meter (No 21).
7. Greater accuracy is obtained by adjusting switch No 19 to 3 kHz or 1 kHz.
8. Repeat the test at 42, 52.95, 53, 65 and 75.95 MHz and at the 100 kHz points for 53 MHz, eg, 53.10, 53.20 etc.

PRC 77 TRANSMITTER AUDIO DEVIATION TEST

Performance:

The frequency deviation shall be 10 kHz ± 2 kHz.

Test:

1. Connect the 77 set antenna to the T/R connector of the 500A.
2. Set switch No 4 to 20.
3. Set the RF thumbwheels (No 25) to the same frequency as the 77 set.
4. Set the 1 kHz tone selector (No 15) to INT.
5. Set switch No 26 to GEN.
6. Connect a DVM across the tone out connector (No 10) and adjust the 1 kHz tone level (No 16) to 1.4 MV. This adjustment is very sensitive.
7. Set switch No 26 to REC.
8. Disconnect the DVM and connect the tone out to the audio input of the handset.
9. Set the 77 set to transmit and read the audio deviation on the MOD METER.
10. Set the 77 set to receive and remove the cable from connector No 10.

PRC 77 TRANSMITTER TONE DEVIATION TEST

Performance:

The tone deviation shall be 3 kHz ± 500 Hz.

Test:

1. Connect the 77 set to the T/R connector of the 500A.
2. Set switch No 4 to 6.
3. Set switch No 26 to REC.
4. Set the 77 set to transmit and read the tone deviation on the MOD METER.
5. Set the 77 set to receive.

PRC 77 RECEIVER SENSITIVITY TEST

Performance:

The 77 set shall produce 1 mW output for a RF signal of 0.5 uV modulated by 1 kHz with a deviation of 10 kHz.

Test:

1. Connect the 77 set antenna socket to the T/R connector (No 5) on the 500A.
2. Set switch No 26 to GEN.
3. Set switch No 24 to LOCK.
4. Set the RF Thumbwheels (No 25) to 30 MHz.
5. Adjust RF Level Control (No 11 and 12) to produce an output of 0.5 uV.
6. Set switch No 9 to FM.
7. Set switch No 4 to 20.
8. Set switch No 15 to INT MOD.
9. Adjust the 1 kHz Level (No 16) to produce a 10 kHz deviation as read on the Modulation Meter (No 1).
10. Connect the adaptor testing unit to the 77 set.
11. Place a 1k ohm load across the audio output terminals of the adaptor unit and connect a DVM to the audio output terminals.
12. With the volume control of the 77 set at 5 a reading of approximately 1 Vac should be indicated on the DVM.
13. Repeat the above test at 42, 52.95, 53, 65 and 75.95 MHz.

PRC 77 RECEIVER BANDWIDTH TEST

Performance:

The 77 set receiver bandwidth measured at the Audio output shall be 18 kHz ± 2 kHz at the 3dB points.

Test:

1. Set up the 77 set and 500A the same as for the Sensitivity test.
2. Adjust the volume control of the 77 set to give a 1 Vac on the DVM.
3. With the RF Error Range Switch (No 19) set to 10K, move the GENlock control from lock through centre zero (+ and -) to obtain a reading of 0.707 Vac on the dVM (- 3 dB). These points must occur within the limits of the Freq Error Meter.
4. Repeat the test at each Receiver Sensitivity Test.

PRC 77 RECEIVER SINAD TEST

Performance:

The 77 set shall produce a SINAD reading of 10 dB or greater when an RF signal of 1 uV is modulated by 1 kHz with a deviation of 10 kHz. The tests are carried out at 42 MHz and 65 MHz.

Test:

1. Set the 77 set and the 500A the same as for the Receiver Sensitivity Test.
2. Set the RF level control (No 11 and 12) to produce an output signal of 1 uV.
3. Connect the audio output terminals of the adaptor unit to connector No 7 of the 500A.
4. Set switch No 4 on the 500A to the SINAD position.
5. The SINAD reading is taken off the Meter.

PRC 77 RECEIVER DISTORTION TEST

Performance:

With an RF input of 400 uV, modulated by 1 kHz with a deviation of 10 kHz, the receiver distortion will be 5% or less.

Test:

1. Connect the 77 set to the T/R connector (No 5) on the 500A.
2. Set switch No 26 to GEN.
3. Set RF Level (No 11 and 12) to 400 uV.
4. Set Lock Control to LOCK.
5. Set switch No 9 to FM.
6. Set switch No 4 to 20.
7. Set switch No 15 to INT MOD.
8. Adjust the 1 kHz control to 10 kHz deviation as read on the MOD METER.
9. Set switch No 4 to DIST.
10. Connect the adaptor unit to the 77set.
11. Connect the audio terminals to connector No 7 on the 500A.
12. The distortion is read on the MOD METER and should be 5% or less.

PRC 77 RECEIVER SQUELCH SENSITIVITY TEST

Performance:

An RF input of 0.3 uV with a deviation of 3 kHz will cause the 77 set to break squelch.

Test:

1. Connect the 77 set to the T/R connector of the 500A.
2. Set switch No 26 to GEN.
3. Set switch No 9 to FM.
4. Set switch No 15 to OFF.
5. Set switch No 4 to ON.
6. Adjust the audio frequency thumbwheels (No 18) to 150 Hz.
7. Adjust the variable tone generator to produce a 3 kHz deviation as read on the modulation meter.
8. Adjust the RF level controls (No 11 and 12) to produce 0.1 uV.
9. Set the 77 set squelch to ON, no noise should be heard in the handset.
10. Adjusting the RF level control to increase the output between 0.3 uV and 0.5 uV should cause the 77 set to break squelch.

RADIO SET AN/PRC 25-77

OPERATIONAL INSPECTION STANDARDS LOG SHEET

Job Number	
Serial Number	
Owner Unit	
Inspector	
Date of In-Inspection	
Date of Out-Inspection	

SET	MODIFICATION	RECORDED	No.	P/E
25	Relocation of C9 in A24	Module	1	
25	Insertion of Diode in A27	Case	1	
25	Pressure Relief Valve	Case	2	
77	CR1, CR2 change to IN4148 in A44	Module	1	
77	Battery Compartment Rubbers	Case	1	
77	Pressure Relief Valve	Case	2	

MISCELLANEOUS	REMARKS	P/E
Cleanliness, Paintwork, Stencilling		
Silicone Grease Applied		
Dial Light and all Function Controls		
Connectors and Covers		
Modules, Case and Handles Secure		
Sidetone		
Battery Operation		
Power Supply Operation		
CES		

Transmitter Tests:

1. Transmitter Power Output. 1.6 W min.

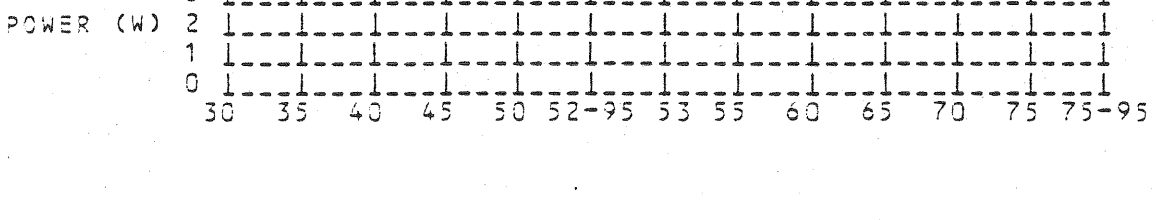

2. Transmitter Frequency.

FREQUENCY +-3.5 KHZ	REMARKS	P/F
30 - 30.95		
42 - 42.95		
52 - 52.95		
53 - 53.95		
65 - 65.95		
75 - 75.95		

3. Transmitter Squelch Tone Deviation and Frequency.

DIAL	DEVIATION 3 +- 0.5 KHZ	FREQUENCY 150 +- 5.0 HZ	P/F
42			
65			

4. Transmitter Voice Deviation. 1 KHZ AF 1/p at 1.4 mV.

DIAL	DEVIATION 10 +- 2.0 KHZ	FREQUENCY 1.0 KHZ	P/F
42			
65			

5. Transmitter Loading.

DIAL	30.00		52.95		53.00		75.95		P/F
	MIN	VI READ	MIN	VI READ	MIN	VI READ	MIN	VI READ	
LONG ANT	9		21		16		8		
SHORT ANT	4		7		5		7		

Receiver Tests:

6. Receiver Sensitivity and S+N/N Ratio. Designated frequency deviated by a 1 KHZ tone at 10 KHZ deviation. RF input at 0.5 uV for sensitivity, and 1.0 uV for S+N/N.

DIAL	30	35	40	45	50	52.95	53	55	60	65	70	75.95
MIN 1 mW												
MIN 10db												
P/F												

7 Receiver Distortion. 1 KHZ tone at 10 KHZ deviation. RF input at 400 uV

DIAL	LEVEL max. 5%	P/F
52.95		

8 Receiver Squelch. 150 HZ tone at 3 KHZ deviation.

DIAL	LEVEL 0.2-0.3 uV	P/F
52.95		

9 Receiver Limiter. 1 KHZ tone at 10 KHZ deviation. RF input at 2 uV, with a 60db increase.

DIAL	MAX CHANGE 1db	P/F
52.95		

10 Receiver Image Response. Designated frequency deviated by a 1 KHZ tone at 10 KHZ deviation. Reduce RF input for A.F. of 1 mW.

DIAL	IMAGE	MIN LEVEL bd	READ	P/F
30	53	90		
53	30	70		
52.95	75.95	70		
75.95	52.95	50		

11 Receiver Bandwidth. 1 KHZ tone at 10 KHZ deviation. Reduce RF input for 100 mV at A21 TP1.

DIAL	db INCREASE	B.W. KHZ	READ	P/E
52.95	6	MIN 32		
	60	MAX 100		

Parts Ordered: