modifications to the MR6A carphone

Steve Gregory, VK3ZAZ
Bob Bennell, VK3ZAC
"Lynmere", Learmonth, 3352

It appears there has been a sudden influx of the multi-channel AWA Car Phones on to disposals markets over recent months. For those who have obtained one of these units here are some notes and information on improvements to existing circuitry, and modifications to upgrade the efficiency of the unit.

Bob, VK3ZAC, has spent 6 years in the commercial servicing field and once fostered over 100 of these mobile units as part of his service responsibilities.

The basic MR6A should realize 10 to 13 watts with 1 to 2 mA grid drive to the QQE03/12. Only the exceptional units with the "right" valve combination seem to be capable of the higher power output.

The first modification attempted to the transmitting section was the second doubler stage V20 which normally used a 6C4. This was changed to a 6AK6 pentode.

An important point to remember whenever any valve substitute is contemplated in these units is the filament configuration to enable the set to operate on either 6 or 12 volts, positive or negative earth.

The filament current of any substitute valve should match the one removed otherwise the balance will be upset, resulting in a deficiency of voltage on one rail and too much on the other.

The 6AK6 power output pentode draws .15 amps at 6.3 volts which is identical with the 6C4.

A quick consultation of the valve data book shows few modifications to valve connections are needed to make the change.

The grid lead from TR10 is shifted from Pin 6 to Pin 1. Grid 3 of the 6AK6 is connected to the cathode by bridging Pin 2 and Pin 7.

The centre post in these units is used as a HT busbar, so do not bridge to earth by accident, or deliberation!

The anode connection remains the same, as do the filaments; however Pin 6, vacated by the grid lead, is now by-passed by a .001 uf disc ceramic and fed from the HT busbar via a 4.7K ½ watt resistor.

The high voltage current is up by some 8.5 mA and a substantial increase in drive can be realized by connecting the anode circuit to the same 400 volt rail as the QQE03/12.

In this way the multiplier stage is keyed up along with the final. The anode coil may need 1 or 2 pF across it for resonance. This is due to the lower internal capacitance of the pentode. Drive will be somewhere between 2.4 to 3.8 mA, with 2.6 mA being the figure when connected to the 200 volt rail only. Power output should be around 15 watts.

The second stage of modification would be a distinct advantage for mobile operations or country repeater operation, and will cost around $10.00.

It involves replacement of the final tube with a YL1240, and the driver with a 12BY7A.

The first question raised was current consumption. Would the power supply carry the increased drain from the higher power tubes? From tests on the final product we have seen that no ratings are exceeded and there is no appreciable difference between the running rail voltages in either the modified or unmodified condition.

The YL1240 is a bigger brother of the QQE03/12 and for similar drive input will give up to 30 watts output.

The large 9 pin socket is available locally and 10 minutes work will see the 9 pin ceramic socket evicted, the hole enlarged, and the new socket soldered or screwed into place. Pin 5 of the new socket points toward the first tank enclosure.

All the components and leads removed from the 3/12 socket are reconnected to the appropriate pins on the YL1240 socket. The connections are identical except that the socket is longer. A trial was given to a modified grid input circuit. Normally a 10K resistor is connected to each grid. The coil TR13 was centre tapped and fed from bias through a 1.3 μH RFC and a 6.8K ohm resistor. Bias was identical when retuned.

Next step is the removal of all components and leads from the 6C4 socket, its eviction, and enlargement of the hole to take the old 3/12 socket (if in good condition), or a new ceramic 9 pin socket.

The choosing of a tube to drive the final is open for discussion at this point. The 6AK6 could possibly drive the new final to full output without modification, but we found that it loaded the circuit too much, resulting in inadequate drive.

The 12BY7A is a sensitive pentode and gives good output when used as a doubler in this circuit. Current consumption is in the order of 25 mA plate, and 6 mA screen.

The 5763 draws 50mA plate and 6mA screen. The 7551 draws 80mA plate and 5.1mA screen when used in similar conditions.

Another point is that the facility of 12 volt filaments in the 12BY7 allows use of the 12 volt rail for a supply source. However, when the 6C4 is removed from the upper rail, 150mA drain is removed, thereby causing unbalance. V15 (a 6BH6) is elevated to the upper line adding 150mA consumption; LP1 (the pilot lamp) is connected to the lower rail and replaced by a 12 volt 1.5 watt version drawing 100 mA.

The additive currents for both rails now equal at .60 Amp each. The 12BY7 draws .30 Amp up across the 12 volt rail and the YL1240 draws .38Amp.

With filaments now in balance, components for the second doubler stage are selected for best performance.

TR10 (the 2nd tripler stage output) would not tune due to increased capacity, so a new approach was chosen where the transformer was modified to a single wound coil, and capacitive resistive coupling was applied to the 12BY7.

A 100K grid leak was found to be too high and a 68K realized optimum drive. As with the previous modification when a 6AK6 was substituted, the screen grid is taken from the keyed HT rail via a 4.7K and .001 decoupler.

The anode circuit is fed from the HT rail via RFC and .001 decoupler.

The rewound coil on the TR10 former was 8 turns of 18 gauge enamelled copper with a 5pF ceramic across the former; the coil resonates at 73MHz with the tuning slug.

HT feed through TR10 to the 6C4 is via a 1.3 μH RFC amd .001 decoupler. To resonate the output stage of the 12BY7, a 3.9 pF was placed across the TR11 coil. By experiment the optimum output against drive was found to be when 6.8K ohm was used and 3.3mA of grid drive obtained. The previous standing bias is retained to all the stages in the driver section and no modification was needed to the final tank circuit.

The PA draws 100mA and, under bench conditions at 13.5 volts, delivers 25 watts output.

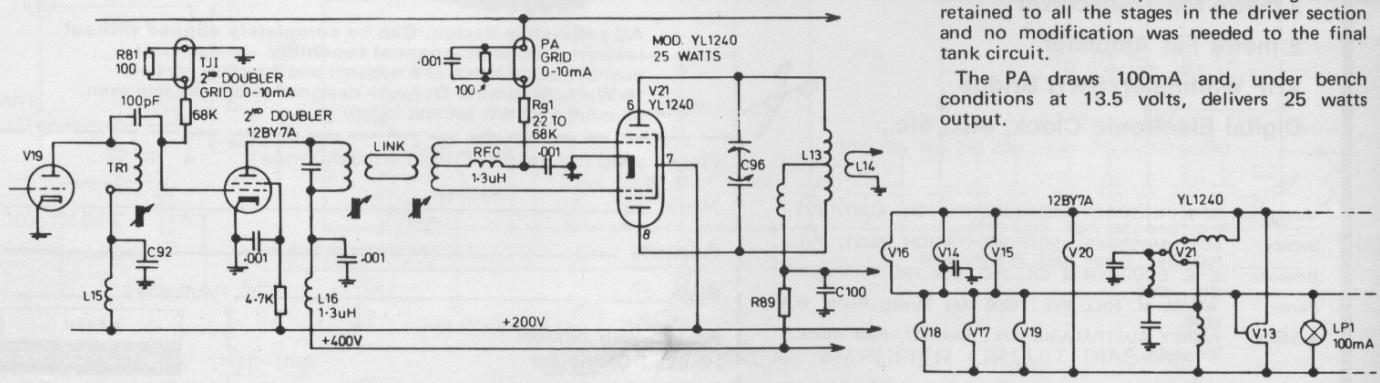

FIG. 1 MODIFICATIONS TO MR6A CARPHONE.

TABLE

Second Tripler: 6C4	Second Doubler: 6C4	P.A. 3/12
drive 0.5 mA	drive 0.75 mA	drive 2.0 mA Power output 12 watts
6C4	**12BY7**	**YL1240**
drive 0.5 mA	drive 0.82 mA	drive 3.3 mA Power output 25 watts
6AK6	**12BY7A**	**YL1240**
drive 0.65 mA	drive 1.5 mA	drive 4.0 mA Power output 31 watts

The figures above show the increased performance obtained and includes figures for the optional 6C4 VS. 6AK6 as the 2nd tripler, which we have not reported on, but which gives the last little bit of performance available from the system. The modification is not essential and is only listed for reference. On the second tripler socket, as with the stage 1 doubler modification, Pin 6 is changed to Pin 1 which is the grid connection; Pin 2 is connected to Pin 7 and earth; Pin 6 is fed from the keyed 200 volt rail via a 4.7K ohm and .001 decoupler.

After retuning the PA coil and grid input the extra drive conditions will be realized.

Modification to Microphone.

There are two ways to achieve rocking armature operation. One is the direct substitute of the transistor pre-amp unit designed by the manufacturers as a replacement for the carbon insert. The other is the replacement of the 12AU7 with a 12AT7 and removal of the Input Transformer. Then connect the rocking armature in place of the transformer secondary.

Modifications to the Muting Circuit.

These were made to improve the time constant and audio frequency response. Instead of referring to substitution, we print the new circuitry (Fig.2) and leave the techniques of placement of the new components and replacement of the old to the discretion of the constructor.

Modification to the Front End.

This simply involves the replacement of V2, the second Mixer, with a type 6CY5. The noise figure of this tetrode is substantially lower than the pentode it replaces. Retuning is necessary and, although the book states an increase in filament current, 175A to 200A, the unbalance benefits the transmitter line, and volts are 6.1 against 6.4 for a 13.5 volt rail instead of a 6.25 balance. Inclusion of a small resistor on the lower rail will rebalance the lines.

Modification to the Power Supply.

To reduce the rise time of the switching transistors, and consequently the dissipation, the 2 feedback resistors R103 and R104 are increased from 330 Ohm to 560 Ohm, 1 watt, and across R98 and R101 are connected two back-to-back electrolytics. The values are 20 microfarad and the positives or negatives are connected together, creating a miniature 10 microfarad non polar capacitor.

In the voltage tripler section, C112 is supplemented by an additional 24 microfarad electrolytic 450 VDCW, 600VDCS.

In our rig we also changed the two doubler electrolytics, substituting 33 microfarad 450VDCW for the existing 24 microfarad values of C108 and C109.

Conclusions

This is definitely a project for those with time on their hands; but results in an improved nice-to-listen-to rig, well behaved, and with that little extra "oomph" for the marginal contact or armchair copy across town.

Those who have heard the rig used by VK3 ZAZ mobile in country areas will probably verify that it is easy to copy and as good as any others heard. No claims to fame are made other than this, and we hope to hear some results from those who desire that little extra, without going "you know what."

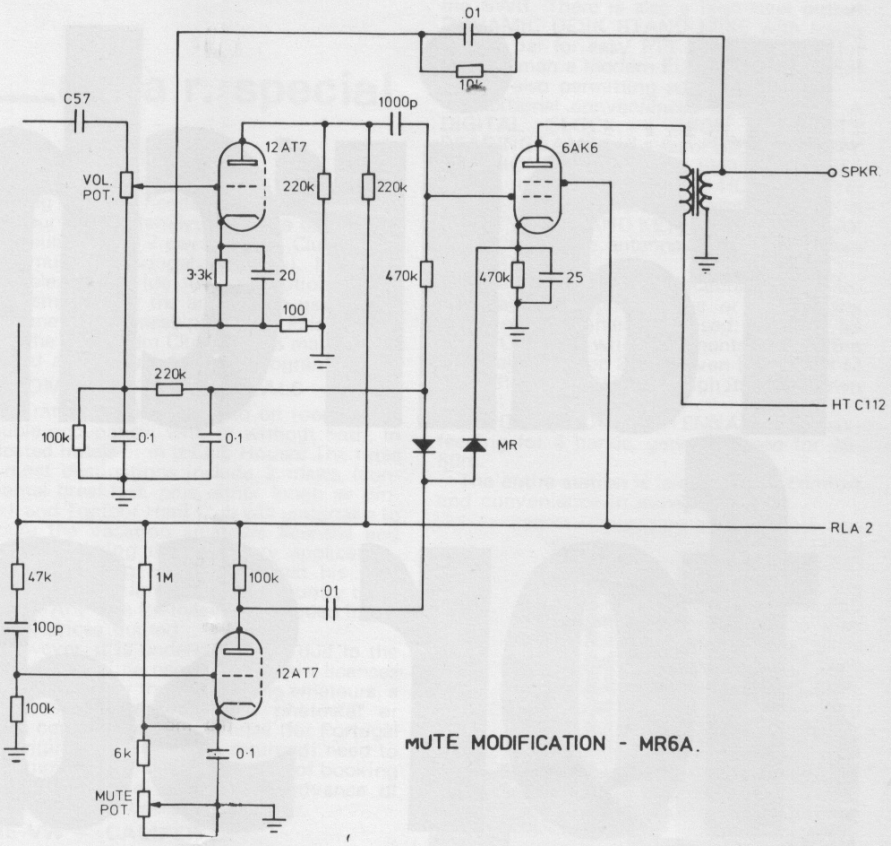

MUTE MODIFICATION - MR6A.

SPECIAL SURPLUS STOCK

AUCTION

OF "GOODIES" (mainly without reserve)

SATURDAY 22nd SEPTEMBER 1973

FROM 11 a.m.

- TRANSCEIVERS
- RECEIVERS
- TRANSMITTERS

Suitable or adaptable to amateur bands HF to VHF

- COMPONENTS GALORE, TOOLS, HARDWARE CABLES, WIRE, METERS, ETC., ETC.

Right-Price 'Junk Boxes' for the young and not so young

RiteBuy TRADING CO

69 Arden St. North Melbourne Tel 329 7618

Commercial Kinks

with Ron Fisher VK3OM
3 Fairview Ave., Glen Waverley, 3150

For the past few months I have been playing with two metre FM transceivers of various types and I must admit that I am fascinated. This month I will relate some of my modifications to the AWA MR6a.

Operating the MR6a from AC. It seems that when many Amateurs think about AC operation of their carphones, they automatically think of heavy duty regulated 12 volt DC power supplies. However this can be difficult and it is often better to run the unit from a standard AC supply with voltage output equivalent to that required by the particular transceiver. Although this description applies to the MR6a, no doubt it could be adapted to almost any valve type transceiver. The MR6a requires about 300 volts for the transmitter final stage and 150 volts for the transmitter driver stages and receiver.

I happened to have an A&R voltage doubler type transformer with 125 volts output at 125 milliamps capacity at the doubled voltage output. As the MR6a has plenty of filtering built in, very little is needed in the power supply. I found that the two series 100 mfd doubler capacitors were all that was required. The only non-standard requirement is that the negative return for the high tension must be insulated above earth.

Another possibility for a power transformer is an old 115/240 volt step-down unit provided it is double wound and not an auto winding. A separate filament transformer would be needed. The twelve pin power connector on the MR6a chassis is now modified so that both the AC supply and a 12 volt DC source can be used.

Remove the link between pin one and pin ten.

Remove the green and black connections to pins eleven and twelve.

Solder both of these to the now vacant pin one. We now have pins ten, eleven and twelve clear. Connect pin ten to the negative line in the MR6a.

A good place to do this is at the negative end of C106 a 25mfd electrolytic. You should be able to measure 470 ohms to ground from this point.

Pin eleven of the power socket is now connected to the positive side of C111. This is located above the chassis right beside the final tube. Pin twelve is connected to the positive end of C112 24 mfd, or to the positive point on the PA metering socket.

This completes the modifications to the MR6a. The AC supply is connected as follows: HT negative to pin ten. 150 volts to pin eleven. 300 volts to pin twelve. 12.6 volts AC to pin four with the earth return to pin two.

The twelve volt DC connections remain the same except that the bridge between pins 10, 11 and 12 on the female socket must be removed.

A Rocking Armature Microphone with the MR6a.

The MR6a article in September, 1973 AR must have applied to a different model to mine as neither the 12AU7 or the microphone transformer were in my set. Instead the carbon mike was fed directly into the grid of a triode-connected 6AU6. As the rocking armature microphone requires more gain the 6AU6 is rewired as a pentode.

Replace the 6AU6 plate load resistor R61 100k ohms with one of 470k ohms. Cut the connection pins 5 and 6 on the 6AU6 socket and wire a 1 meg resistor from pin 6 to the HT tie point. Bypass pin 6 to ground with a .02 disc ceramic capacitor. The coupling capacitor from pin 5, a 470 pf, should be changed to a .01 mfd to improve the audio response. Remove the 1k resistor across the microphone input. Remove the two paralleled 33k ohm resistors R54 and R56 which were used to feed operating voltage to the carbon microphone.

A three pin DIN socket was fitted to the side of the front panel as an input connector and a right angle DIN plug wired to the new microphone.

If you find a little more microphone gain is needed increase R64 82k ohms to 1meg ohm.

With these modifications your MR6a will be a versatile and smooth sounding rig. ●

WIA 2m BAND PLAN

As announced briefly in Oct '73 AR (p4) there is now in existence an Australia-wide WIA 2m band plan to include simplex and repeater channels.

Channel Numbering System:

Official encouragement is given to rounding off all the existing 2m band FM net frequencies to the nearest 50kHz. Channels shall be numbered on a numerical basis beginning with Channel 0 as 144.000MHz and that Channels O to 20 be allocated at a future date (i.e. 144.000 to 145.000MHz).

To assist in identifying Channels with frequencies the following short table may be useful:—

Freq: MHz	Channel No.
145.500	30
145.750	35
145.850	37
145.950	39
146.000	40
146.500	50
147.000	60
147.500	70

2m FM Repeater Frequencies:

Input MHz	Channel	Output MHz	Channel	
146.100	42	146.700	54	(1)
146.200	44	146.800	54	(2)
146.300	46	146.900	58	(3)
146.400	48	147.000	60	(4)