ROHDE&SCHWARZ

Measuring Instruments
and Systems Division

Service manual

RADIOCOMMUNICATION TESTER CMT

802.2020.52
802.2020.54

VOLUME 2

The service manual consists of 2 volumes

Printed in the Federal
Republic of Germany

Contents of CMT Manual

Operating manual

1. Data Sheet
2. Preparations and Operation
3. Maintenance

Service manual

Volume 1

4. Service Manual for Complete Instrument

5. Service Instruction for Modules

	Order No.	Index
Power Pack	802.2814.02	1
Digital Unit	802.4517.02	2
Analog Unit	802.8435.02	3
1st Modulation Generator Module	802.5713.02	4
RF Oscillator Module including	802.8835.02	5
Reference Oscillator (OCXO) CMT-B1	803.8916.02	
Output Stage	802.7616.02	6
Attenuation Set Module	802.4223.02	7

Volume 2

5. Service Instruction for Modules

Oscilloscope Module	803.1111.00	1
Display/Keyboard Module	802.3662.00	2
Adjacent-channel Power Meter CMT-B6	803.7810.02	3
2nd AF Synthesizer CMT-B7	803.2618.02	4
IEC Bus/Control Interface CM-B4	803.3914.02	5
Autorun Control/Printer Interf. CM-B5	803.3314.02	6
RF Millivoltmeter CM-B8	803.6813.02	7
Duplex Modulation Meter CM-B9	803.5317.02	8
DTMF Decoder CM-B11	803.4610.02	9
Transfer Memory Module CM-Z1	803.7510.02	10

Contents

5 Service Manual for the Individual Modules

	Index
Oscilloscope Module	1
Display/Keyboard Module	2
Adjacent-channel Power Meter CMT-B6	3
2nd AF Synthesizer CMT-B7	4
IEC Bus/Control Interface CM-B4	5
Autorun Control/Printer Interface CM-B5	6
RF Millivoltmeter CM-B8	7
Duplex Modulation Meter CM-B9	8
DTMF Decoder CM-B11	9
Transfer Memory CM-Z1	10

General

Serial data transmission to the individual plug-in modules takes place on three lines: CLOCK, DATA and STROBE. The data must be read in using an external controller, e.g. PUC, in order to adjust or test the modules independent of the basic instrument.

The timing diagram for data transmission is shown below.

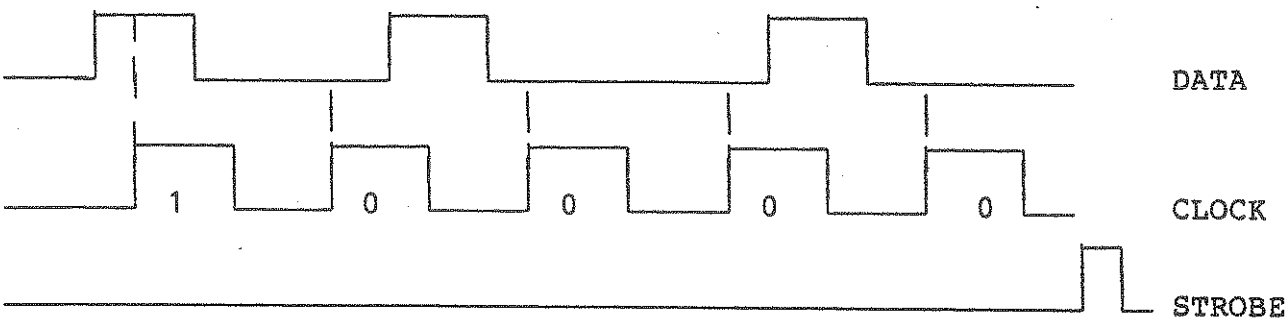

The data on the DATA line are transferred to the parallel/serial converter with each rising edge of the CLOCK pulses; a subsequent STROBE pulse enables the data at the converter outputs. The following BASIC program shows how the user port of the PUC can address the module:

```
10 POKE 59259,255          Set user port
20 DIM A(20)               Number of individual data bits,
                           20 in this case
30 A(1)=0:A(2)=1...        Define individual data

40 FOR I=1T020
50 POKE 59471,A(I)         Read in data;
60 POKE 59471,A(I)+2       Line with significance 2^0 = DATA,

70 NEXT                    significance 2^1 = CLOCK

80 POKE 59471,4            Output of STROBE pulse on line
90 POKE 59471,0:END        with significance 2^2
```

ROHDE&SCHWARZ

SERVICE INSTRUCTIONS

IEC Bus/Control Interface Option CM-B4

803.3914.02

Contents

		Page
5	Service Manual for IEC Bus/Control Interface Option CM-B4	5.1
5.1	Function Description	5.1
5.1.1	IEC-bus Interface	5.3
5.1.2	Relay Interface	5.3
5.2	Testing and Adjustment	5.3
	Components lists	
	Circuit diagrams	
	Component layout diagrams	

5 Service Manual for IEC Bus/Control Interface Option CM-B4

(See circuit diagram 803.3920 S and block diagram)

5.1 Function Description

This module comprises two subassemblies:

- IEC-bus interface
- Relay interface

The IEC-bus interface enables the instrument to be used as a listener or as a talker together with an IEC-bus controller.

It is also possible to access the eight relays on the module by the CMT. The contacts can be assigned as desired.

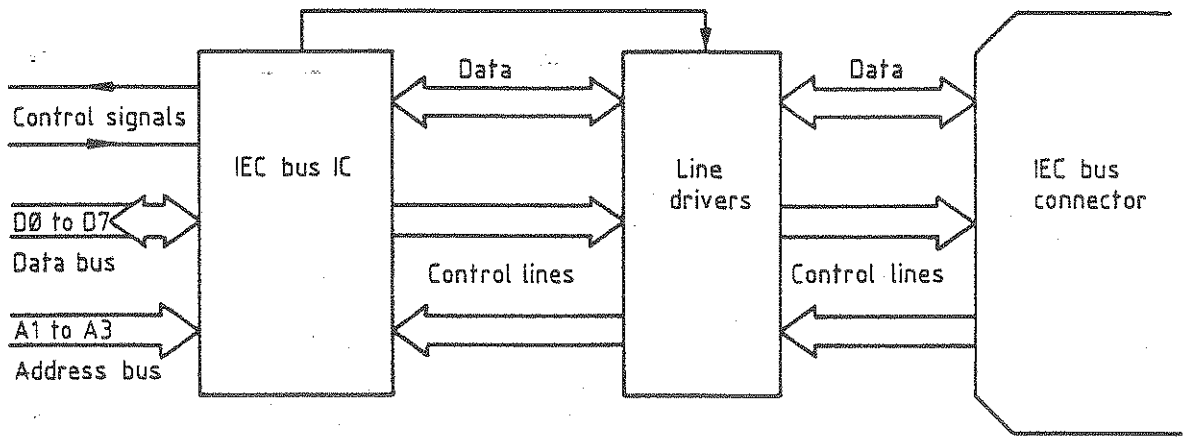

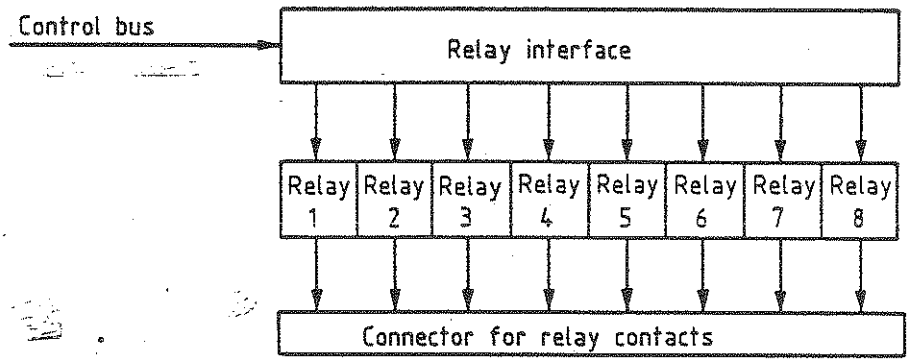

Fig. 5-1 Block diagram of the IEC-bus/control interface

5.1.1 IEC-bus Interface

The IEC-bus interface is based on the talker/listener IC 8291A GPIB. This IC provides all the interface functions which must be carried out between the controller and the IEC-bus output and can be directly addressed by the controller via the data bus and certain system control lines.

Functions:

- Read
- Write
- Load IEC-bus IC

It is possible to set the IC to a particular mode using the load operation. The internal registers of the 8291A IC are selected to this end via the address lines A1, A2, A3.

The controller addresses the IC via its select input $\overline{CS}$ by means of a special range selection line.

All IEC-bus signals pass via bidirectional line drivers before they are applied to the IEC-bus output. Data transfer with the CPU can take place under interrupt control or in DMA mode.

5.1.2 Relay Interface

The interface circuit for triggering the eight relays corresponds to the standard interface circuit with serial-to-parallel data conversion.

The interface circuit provides a control bit for each relay so that the complete interface need only provide eight parallel control lines.

The control bus consists of three lines:

CPS-S	Clock
DO-S	Data (relay control)
IEC	Strobe pulse

5.2 Testing and Adjustment

The module cannot be adjusted. All tests should be carried out using Section 3.

ROHDE & SCHWARZ
MÜNCHEN

Schaltteillisten
Stromläufe
Bestückungspläne

Parts lists
Circuit diagrams
Components plans

R 29500 Bl. 2

ROHDE&SCHWARZ	ÄZ	Datum Date	Schaltteilliste für Parts list for ED IEC-BUS-INTERFACE	Sachnummer Stock No.	Blatt Page
	08	0285		803.3920.01 SA	1

Kennzeichen Component No.	Benennung/Beschreibung Designation	Sachnummer Stock No.	enthalten in contained in
C1	CE 22UF+-20%16V5RDX5RAD.A ELECTROLYTIC CAPACITOR NCC SRE 22UF/16V+-20%	358.6062	
C2	CC 10NF-20+50%7X8R6000 CAPACITOR VALVO 2222 63051 64051103	CC 087.7525	
BIS/TO C6			
D1	BC P8291A IEC BUS INTERF IEC BUS INTERFACE INTEL P2891A	BC 099.4978	
D2	BL SN7406N 6XINVERTER IC HEX INVERTER SN7406N TEXAS SN7406N	BL 237.0487	
D3	BL SN7406N 6XINVERTER IC HEX INVERTER SN7406N TEXAS SN7406N	BL 237.0487	
D4	BL CD4094BE 8BIT SH.REG SHIFT REGISTER RCA CD4094BE	BL 586.7726	
D5	BJ MC3448AP 4XBUS-TRANSC BUS-TRANSCEIVER MOTOROLA MC3448AP	BJ 300.6247	
BIS/TO D8			
K1	SR 5 V 1XU DIL RELAY SIEMENS V23100-V4305-C000	SR 340.4551	
K2	SR 5 V 1XU DIL RELAY SIEMENS V23100-V4305-C000	SR 340.4551	
K3	SR 5V360OHM1MAL1RH-JC-GEH RELAY CLARE PRME 15005	SR 412.0027	
BIS/TO K8			
R1	RL 0,35W 4,75KOHM+-1%TK50 RESISTOR DRALORIC SMA0207/4,75K-F-D	RL 083.1097	
R2	RL 0,35W 4,75KOHM+-1%TK50 RESISTOR DRALORIC SMA0207/4,75K-F-D	RL 083.1097	
R3	TRIMMWERT / SELECTED		
R4	RL 0,35W 2,21KOHM+-1%TK50 RESISTOR DRALORIC SMA 0207/2,21K-F-C	RL 082.2477	
V1	AD 1N4448 75V 0,15A UDI DIODE VALVO 1N4448	AD 012.0700	
BIS/TO			

ROHDE&SCHWARZ	ÄZ	Datum Date	Schaltteilliste für Parts list for ED IEC-BUS-INTERFACE	Sachnummer Stock No.	Blatt Page
	08	0285		803.3920.01 SA	2

Kennzeichen Component No.	Benennung/Beschreibung Designation	Sachnummer Stock No.	enthalten in contained in
V8			
X1	FP STECKERL.INDIR.64POLIG 64-PIN INSERT ERNI STV-P-264 9722.333.	FP 084.6470	
X23	FM WINK.BUCHSENLEIST.25P. 25-SOCKET INSERT SOURIAU DB-25S-500C	FM 243.0962	
X24	FM BUCHSENLEISTE 24P. CONNECTOR AMPHENOL 57LE20240-27CR-D35	349.3012	
			- ENDE -

Ansicht und Leitungs
View of tracks on com

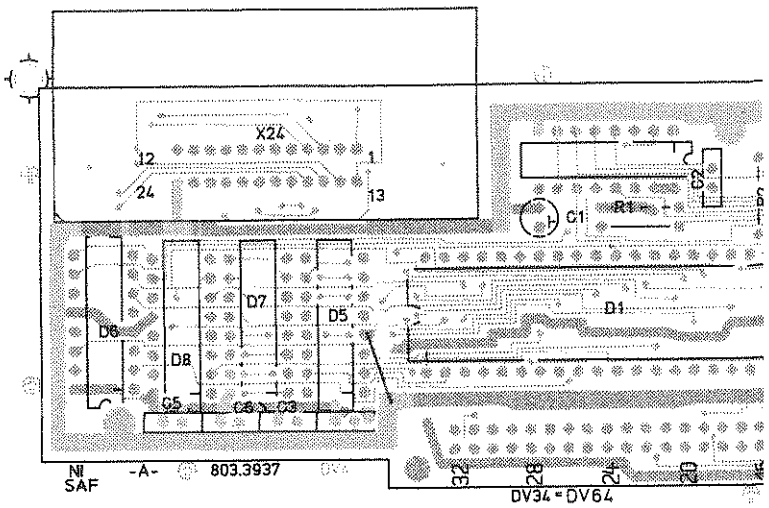

Ansicht und Leitungs
View of tracks on sol

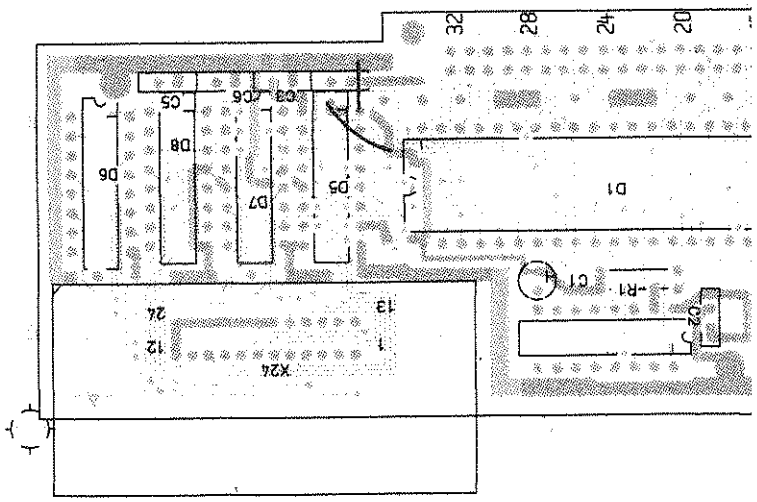

Achtung! MOS-Bauteile
Caution. MOS components

ngsführung Bauteilseite
component side

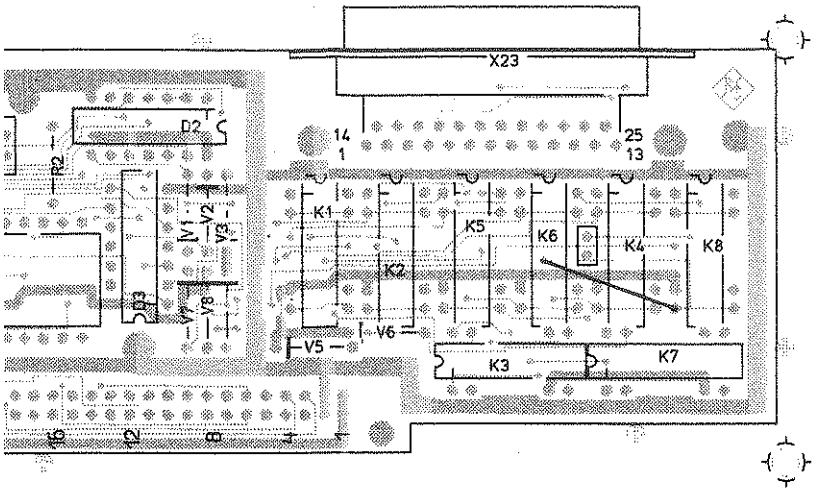

ngsführung Lötseite
solder side

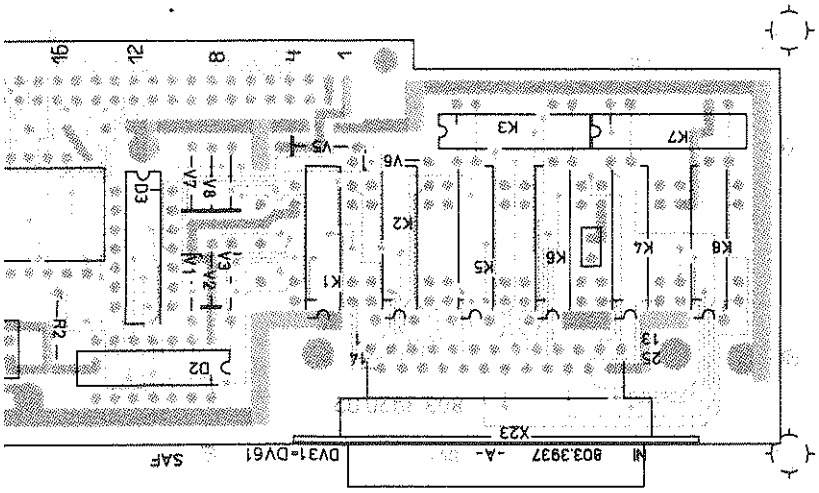

A	—	02.85	NI	Maße ohne Toleranzangabe		Maßstab 1 : 1	
B	32912	8.85	NI			Halbzeug, Werkstoff	
				1KGA	Tag	Name	Benennung
				Bearb.	02.85	NI	IEC-BUS-INTERFACE
				Gepr.			
				Norm			
				ROHDE&SCHWARZ		Zeichn.-Nr. 803.3920	Blatt-Nr. 2 v. Bl.
Änd. Zust.	Änderungs-Mitteilung	Tag	Name	zu Gerät CMT-B4		reg. i. V. 803.3914 V	erste Z. —

Z

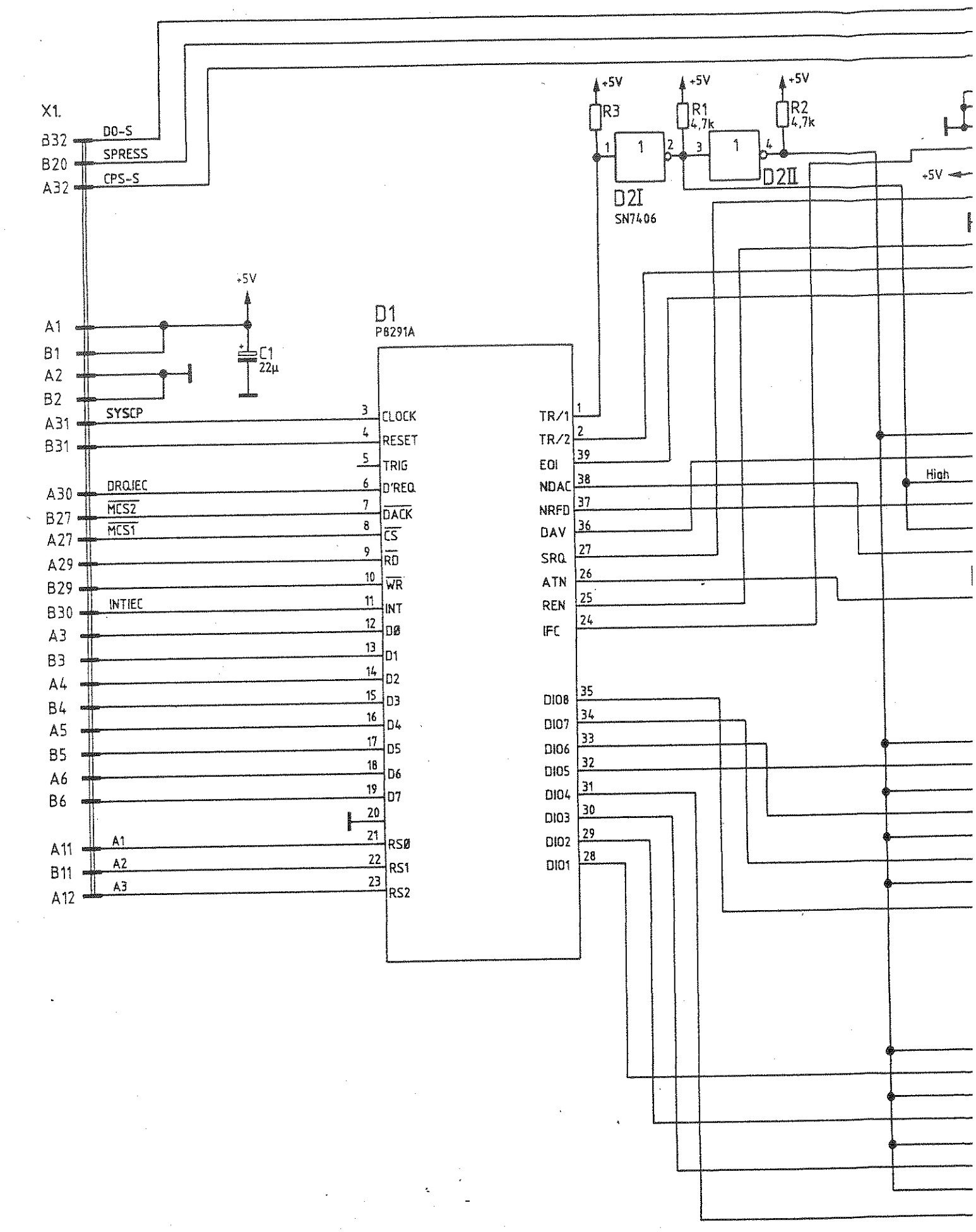
X1.
B32
DO-S
B20
SPRESS
A32
CPS-S
+5V
R3
R1
4,7k
R2
4,7k
D2I
SN7406
D2II
+5V
A1
B1
A2
B2
C1
22µ
D1
P8291A
A31
SYSCP
B31
A30
DRQIEC
B27
MCS2
A27
MCS1
A29
B29
B30
INTIEC
A3
B3
A4
B4
A5
B5
A6
B6
A11
A1
B11
A2
A12
A3
CLOCK
RESET
TRIG
D'REQ
DACK
CS
RD
WR
INT
D0
D1
D2
D3
D4
D5
D6
D7
RS0
RS1
RS2
TR/1
TR/2
EOI
NDAC
NRFD
DAV
SRQ
ATN
REN
IFC
DIO8
DIO7
DIO6
DIO5
DIO4
DIO3
DIO2
DIO1
High

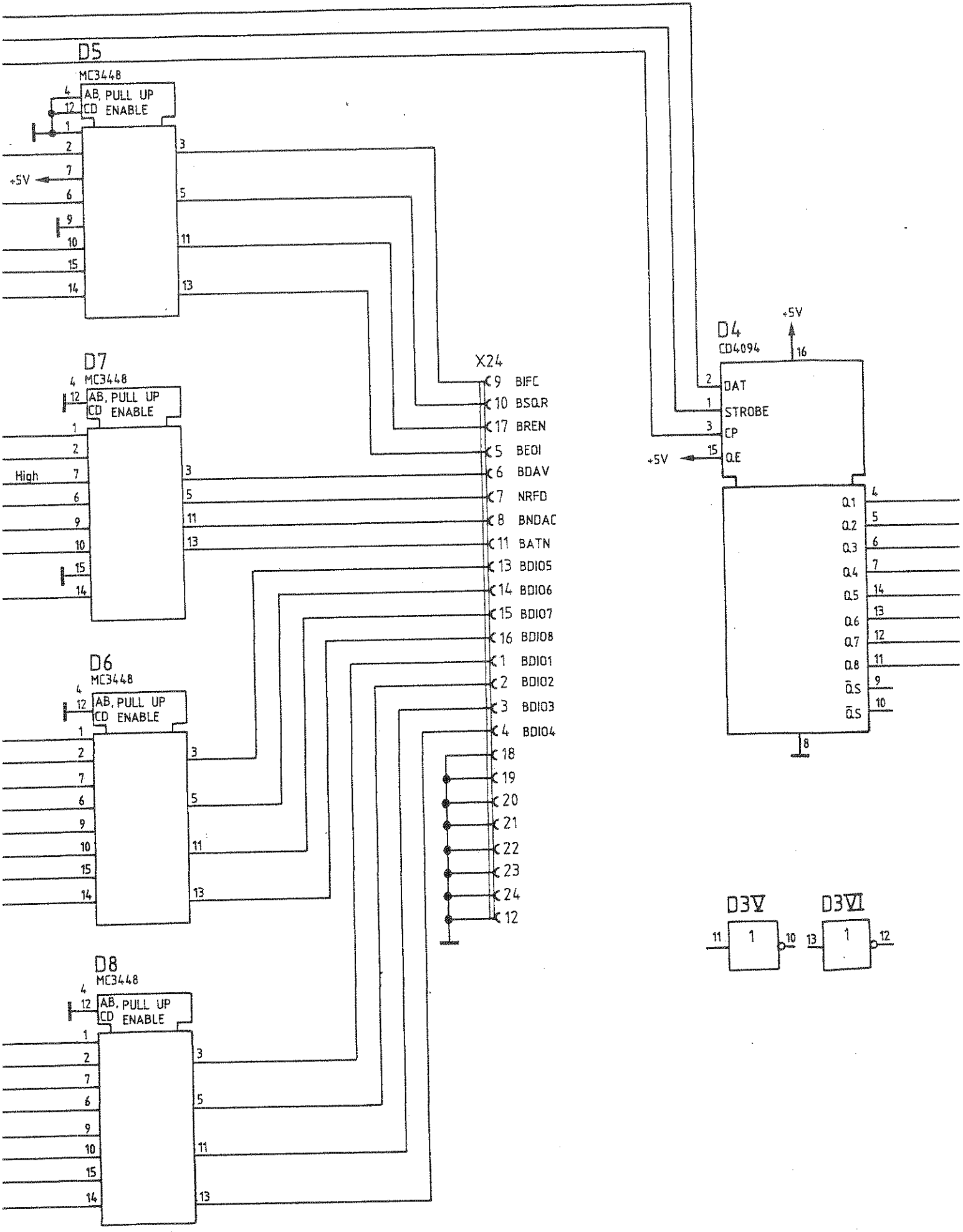
D5
MC3448
AB, PULL UP
CD ENABLE
+5V
D7
MC3448
AB, PULL UP
CD ENABLE
High
D6
MC3448
AB, PULL UP
CD ENABLE
D8
MC3448
AB, PULL UP
CD ENABLE
X24
9 BIFC
10 BSQR
17 BREN
5 BEOI
6 BDAV
7 NRFD
8 BNDAC
11 BATN
13 BDIO5
14 BDIO6
15 BDIO7
16 BDIO8
1 BDIO1
2 BDIO2
3 BDIO3
4 BDIO4
18
19
20
21
22
23
24
12
D4
CD4094
+5V
DAT
STROBE
CP
OE
Q1
Q2
Q3
Q4
Q5
Q6
Q7
Q8
QS
QS
D3V
D3VI

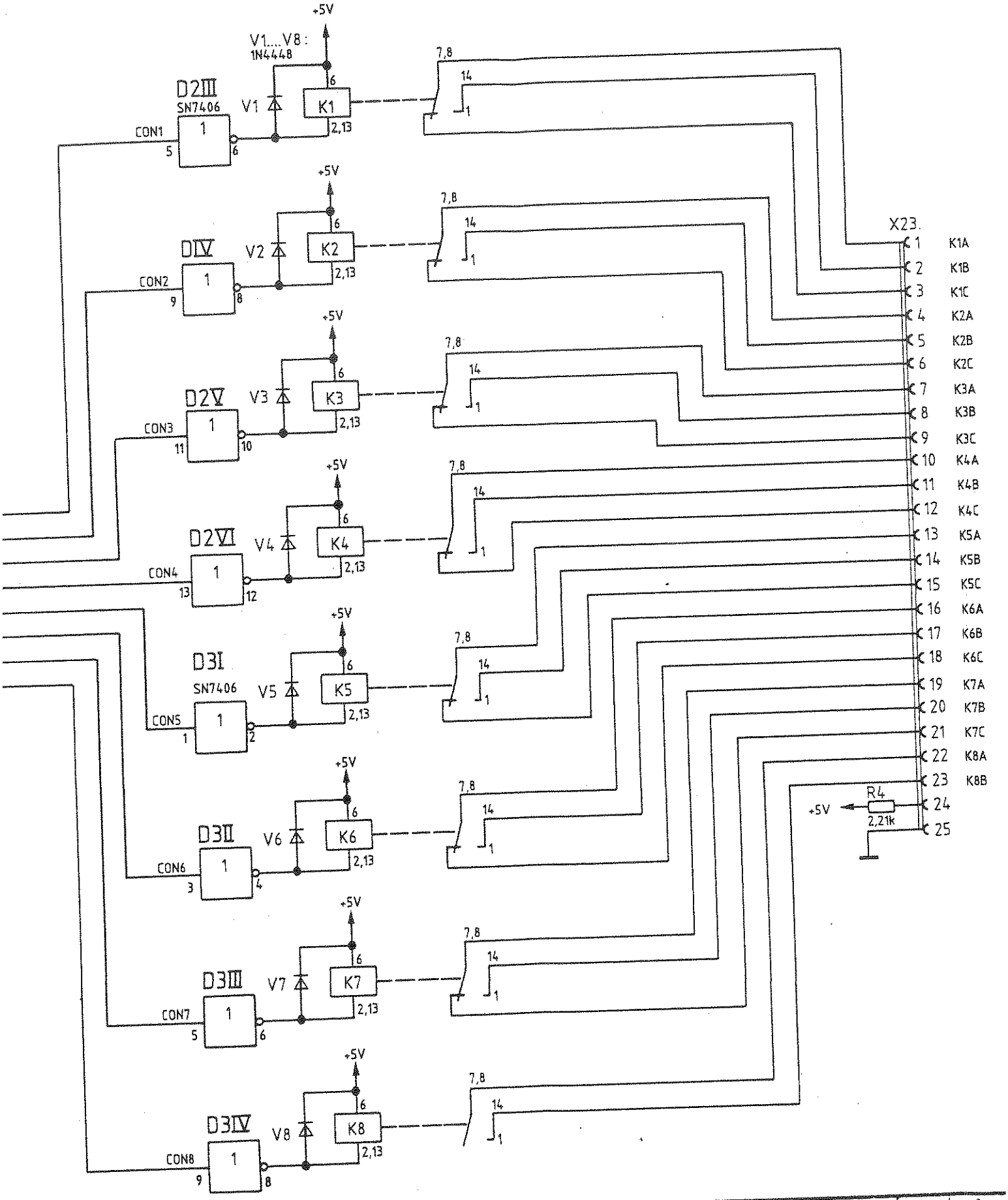

ROHDE&SCHWARZ	A		7.85	CO				1KGA	Tag
								Bearb	10.84
								Gepr	
	Änd. Index	Änderungs Nr.	Datum	Name	Änd. Index	Änderungs Nr.	Datum	Name	Norm

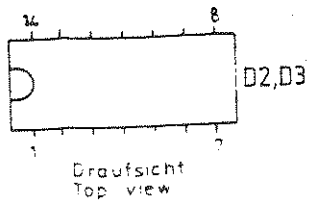

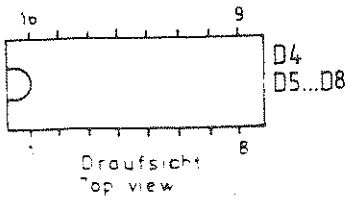

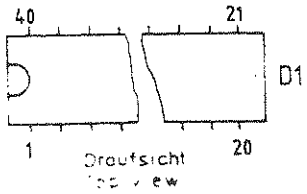

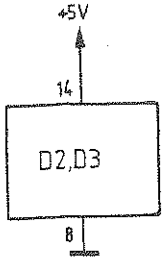

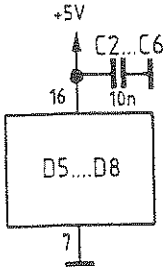

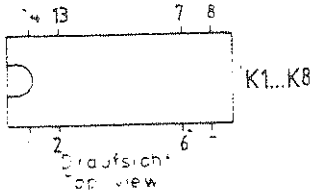

Stromlauf gilt für VAR 02
Circuit diagramm is valid for model 02

84	Name ni	Benennung IEC-BUS-Control interface IEC-BUS-Steuerinterface	Z	Zeichn.-Nr 803.3920 S
		zu Gerät CM-B4		Ersatz 803.3914 V ersetzt Z 803.3914

11 12 13 14

ROHDE&SCHWARZ

SERVICE INSTRUCTIONS

2nd AF Synthesizer Option CMT-B7

803.2618.02

Contents

Page

5 Service Manual for 2nd AF Synthesizer Option CMT-B7 ..... 5.1

5.1 Function Description 5.1

5.2 Testing and Adjustment 5.2
5.2.1 Testing the Input Stage 5.2
5.2.2 Adjusting the Sinewave Generator 5.2
5.2.3 Testing the Reference Voltage 5.2
5.2.4 Testing the Filter 5.2
5.2.5 Testing the Level Attenuator 5.2
5.2.6 Testing the PILINT Output (Internal Pilot Tone Output) 5.3

Component lists
Circuit diagrams
Component layout diagrams

5 Service Manual for 2nd AF Synthesizer Option CMT-B7

(See circuit diagram 803.2624 S)

5.1 Function Description

This option is largely identical with the AF synthesizer on the 1st modulation generator module (802.5713.02).

A signal with 32 times the frequency of the required signal is applied to input PILCP (X1.B22). The level can be adjusted in 256 steps using the D/A converter N8 up to a maximum of 1.77 V_{rms}. The two outputs PILOT (X1.B24) and PILINT (X1.A27) provide signals for the two function units on the 1st modulation generator module: PILOT for the modulation control, PILINT for the AF synthesizer for two-tone generation.

The option also generates an interrupt signal either at phase positions 90° and 270° of the stepped sinewave.

5.2 Testing and Adjustment

The module need not be adjusted.

5.2.1 Testing the Input Stage

X1.B22 (PILCP): $f = 32 \times f_{PIL}$, i.e. $640\ Hz < f < 800\ kHz$, squarewave voltage ($V_{Low} = 0\ V$, $V_{High} = 100\ mV$) but distorted above $f > 100\ kHz$ by series-connected lowpass; $V_{max.}$ remains at 100 mV.

P1: TTL signal with $f = 32 \times f_{PIL}$

5.2.2 Adjusting the Sinewave Generator

D1/3: TTL signal with $f = f_{PIL}$

P4: Stepped sinewave (32 steps/period) with $f = f_{PIL}$, Using R31, adjust peak amplitude to 2.5 V ± 10 mV.

5.2.3 Testing the Reference Voltage

P3: DC voltage V = +5 V ±0.3%.

5.2.4 Testing the Filter

P5: Sinewave signal with $f = f_{PIL}$ and V_{rms} = 1.768 V ±1%

5.2.5 Testing the Level Attenuator

Instrument setting:

Modulation depth from 0 to 100%

The voltage V_{rms} at X1.B24 must change from 0 to 1.76 V without jumps.

5.2.6 Testing the PILINT Output (Internal Pilot Tone Output)

Instrument setting:

Two-tone modulation

X1.A27: Sinewave signal with $V_{rms} = 1.768\ V \pm 3\%$
$f = f_{INT2}$

ROHDE & SCHWARZ
MÜNCHEN

Schaltteillisten
Stromläufe
Bestückungspläne

Parts lists
Circuit diagrams
Components plans

R 29500 Bl. 2

Kennz. Comp.No.	Benennung Designation	Sachnummer Stock No.	Hersteller Manufacturer	Bezeichnung Designation	enthalten in contained in
C1	CE 100UF+-20%25V RD8X9,5 ELECTROLYTIC CAPACITOR	803.0580	MATSUSHITA	ECE-A1ESS-101	
C3	CE 100UF+-20%25V RD8X9,5 ELECTROLYTIC CAPACITOR	803.0580	MATSUSHITA	ECE-A1ESS-101	
C4	CE 22UF+-20%16V5RDX5RAD.A ELECTROLYTIC CAPACITOR	358.6062	NCC	SRE 22UF/16V+-20%	
C5	CE 22UF+-20%16V5RDX5RAD.A ELECTROLYTIC CAPACITOR	358.6062	NCC	SRE 22UF/16V+-20%	
C6	CE 100UF+-20%25V RD8X9,5 ELECTROLYTIC CAPACITOR	803.0580	MATSUSHITA	ECE-A1ESS-101	
C8	CE 22UF+-20%16V5RDX5RAD.A ELECTROLYTIC CAPACITOR	358.6062	NCC	SRE 22UF/16V+-20%	
C10	CE 22UF+-20%16V5RDX5RAD.A ELECTROLYTIC CAPACITOR	358.6062	NCC	SRE 22UF/16V+-20%	
C11	CK 15NF+-1%63V7,5QUX13 KP CAPACITOR	CK 340.8063	SIEMENS	B33531-A5153-F	
C12	CK 10NF+-1%63V7,5QUX13 KP CAPACITOR	CK 340.9076	SIEMENS	B33531-A5103-F	
C13	CK 22NF+-5%63V5RM MKT CAPACITOR	CK 099.2881	WIMA	MKS2/63/0,022UF/5%	
C14	CK 10NF+-1%63V7,5QUX13 KP CAPACITOR	CK 340.9076	SIEMENS	B33531-A5103-F	
C15	CK 39NF+-1%63V10QUX13 KP CAPACITOR	CK 099.1940	SIEMENS	B33531-A5393-F	
C16	CK 2,4NF+-1%63V,3QUX11KP CAPACITOR	CK 334.5637	SIEMENS	B33531-A5242-F	
C17	CC 100NF+-10%50V5K1200VIE CAPACITOR	CC 084.5350	UNION CARB	CK05BX104K	
C18	CK 6,8NF +-1% 63V RM5 KP POLYPROPYLENE CAPACITOR	007.7646	ROE	KP1830-268/061-R	
C19	CK 4,7NF+-1%63V6,3X11 KP PLASTIC-FOIL CAPACITOR	CK 283.1701	SIEMENS	B33531-A5472-F	
C20	CK 6,8NF +-1% 63V RM5 KP POLYPROPYLENE CAPACITOR	007.7646	ROE	KP1830-268/061-R	
C21	CK 3,3NF+-1%63V6,3QUX11KP CAPACITOR	CK 340.9030	SIEMENS	B33531-A5332-F	
C22	CK 15NF+-1%63V7,5QUX13 KP CAPACITOR	CK 340.8063	SIEMENS	B33531-A5153-F	
C23	CK 1NF+-2,5%63V RM5 KP POLYPROPYLENE CAPACITOR	CK 099.6129	WIMA	FKP2 1000/2,5%/63V	
C24	CK 1,5NF +-1% 100V RM5 KP POLYPROPYLENE CAPACITOR	007.7600	ROE	KP1830-215/011-R	
C25	CK 1NF+-2,5%63V RM5 KP POLYPROPYLENE CAPACITOR	CK 099.6129	WIMA	FKP2 1000/2,5%/63V	
C26	CK 3,3NF+-2,5%63V RM5 KP POLYPROPYLENE CAPACITOR	CK 099.6158	WIMA	FKP2 3300/2,5%/63V	
C27	CK 470PF +-1% 100V RM5 KP POLYPROPYLENE CAPACITOR	007.7575	ROE	KP1830-147/011-R	
C28	CC 10NF-20+50%7X8R4000 CAPACITOR	CC 087.7525	VALVO	2222 63051 64051103	
C29	CC 10NF-20+50%7X8R4000 CAPACITOR	CC 087.7525	VALVO	2222 63051 64051103	
C30 ..34	CC 100NF+-10%50V5K1200VIE CAPACITOR	CC 084.5350	UNION CARB	CK05BX104K	
C35	CE 100UF+-20%25V RD8X9,5 ELECTROLYTIC CAPACITOR	803.0580	MATSUSHITA	ECE-A1ESS-101	
C36	CE 100UF+-20%25V RD8X9,5 ELECTROLYTIC CAPACITOR	803.0580	MATSUSHITA	ECE-A1ESS-101	
C37	CC 10PF+-0,25PF3X4NPO CAPACITOR	CC 087.6429	VALVO	2222 678 09109	
C38	CC 10PF+-0,25PF3X4NPO CAPACITOR	CC 087.6429	VALVO	2222 678 09109	
C60	CE 100UF+-20%25V RD8X9,5 ELECTROLYTIC CAPACITOR	803.0580	MATSUSHITA	ECE-A1ESS-101	
C61	CE 100UF+-20%25V RD8X9,5 ELECTROLYTIC CAPACITOR	803.0580	MATSUSHITA	ECE-A1ESS-101	
D1	BL CD4520BE 2XBIN.COUNT COUNTER	BL 299.6908	RCA	CD4520BE	
D2	BL CD4015BE 2X4B.SH.REG SHIFT REGISTER	BL 086.7044	RCA	CD4015BE	
D3	BL CD4015BE 2X4B.SH.REG SHIFT REGISTER	BL 086.7044	RCA	CD4015BE	
D4	BL CD4094BE 8BIT SH.REG SHIFT REGISTER	BL 586.7726	RCA	CD4094BE	
D5	BL CD4094BE 8BIT SH.REG SHIFT REGISTER	BL 586.7726	RCA	CD4094BE	

Kennz. Comp.No.	Benennung Designation	Sachnummer Stock No.	Hersteller Manufacturer	Bezeichnung Designation	enthalten in contained in
D6	BL CD4071BE 4X2IN. ORG OR GATE	BL 299.6866	RCA	CD4071BE	
D7	BL MC14528BCP 2X MONOFLOP MONOSTABLE MULTIVIBRATOR	BL 086.7315	SSS	SCL4528BE	
N1	BO LF412CN 2XFET OPAMP OPERATIONAL AMPLIFIER	356.0521	NSC	LF412CN	
N2	BO LF412CN 2XFET OPAMP OPERATIONAL AMPLIFIER	356.0521	NSC	LF412CN	
N3	BO LF412CN 2XFET OPAMP OPERATIONAL AMPLIFIER	356.0521	NSC	LF412CN	
N4	BO LF412CN 2XFET OPAMP OPERATIONAL AMPLIFIER	356.0521	NSC	LF412CN	
N5	BO LF412CN 2XFET OPAMP OPERATIONAL AMPLIFIER	356.0521	NSC	LF412CN	
N6	BL CD4053BE 3X2CH. MUX MULTIPLEXER	BL 565.3080	RCA	CD4053BE	
N7	BO LF411CN JFET OPAMP OPERATIONAL AMPLIFIER	349.3058	NSC	LF411CN	
N8	BJ AD7523JN 8B.D/A-CONV D/A CONVERTER	801.8219	MICRO POW.	MP7523JN	
N9	BO LF412CN 2XFET OPAMP OPERATIONAL AMPLIFIER	356.0521	NSC	LF412CN	
N10	BL CD4053BE 3X2CH. MUX MULTIPLEXER	BL 565.3080	RCA	CD4053BE	
N11	BO LF411CN JFET OPAMP OPERATIONAL AMPLIFIER	349.3058	NSC	LF411CN	
N100	BO LM311N COMPAR COMPARATOR	BO 394.8755	NSC	LM311N	
O1	VL STECKLOETOESE 7,5X1,1 PLUG-IN SOLDERING LUG	VL 078.2747	-	R&S-ZCHNG.078.2747	
O2	VL STECKLOETOESE 7,5X1,1 PLUG-IN SOLDERING LUG	VL 078.2747	-	R&S-ZCHNG.078.2747	
P1	VL WIRE-WRAP PIN WIRE-WRAP PIN	VL 088.4507	BERG	NR. 75 403-001	
..8					
P10	VL WIRE-WRAP PIN WIRE-WRAP PIN	VL 088.4507	BERG	NR. 75 403-001	
P11	VL WIRE-WRAP PIN WIRE-WRAP PIN	VL 088.4507	BERG	NR. 75 403-001	
P30	VL WIRE-WRAP PIN WIRE-WRAP PIN	VL 088.4507	BERG	NR. 75 403-001	
R1	RL 0,35W2,21 OHM+-1%TK50 METALFILMRESISTOR	RL 099.7948	RESISTA	MK2 2,21 OHM 1% TK50	
R2	RL 0,35W 10,0KOHM+-1%TK50 RESISTOR	RL 083.1297	DRALORIC	SMA0207/10K-F-D	
R3	RL 0,35W 10,0 OHM+-1%TK50 RESISTOR	RL 082.8852	DRALORIC	SMA0207/10OHM-F-D	
R5	RL 0,35W2,21 OHM+-1%TK50 METALFILMRESISTOR	RL 099.7948	RESISTA	MK2 2,21 OHM 1% TK50	
R7	RL 0,35W 10,0 OHM+-1%TK50 RESISTOR	RL 082.8852	DRALORIC	SMA0207/10OHM-F-D	
R8	RL 0,35W4,75 OHM+-1%TK50 METALFILMRESISTOR	RL 099.8021	RESISTA	MK2 4,75 OHM 1% TK50	
R10	RL 0,35W 10,0KOHM+-1%TK50 RESISTOR	RL 083.1297	DRALORIC	SMA0207/10K-F-D	
R11	RL 0,35W 100 OHM+-1%TK50 METALFILM-RESISTOR	RL 082.6543	DRALORIC	SMA0207/100/HM-F-D	
R12	RL 0,35W 2,00KOHM+-1%TK50 RESISTOR	RL 083.0826	DRALORIC	SMA0207/2,00K-F-D	
R13	RL 0,35W 1KOHM+-1%TK50 RESISTOR	RL 082.2160	DRALORIC	SMA0207/1K-F-C	
R14	RL 0,35W 178 KOHM+-1%TK50 RESISTOR	RL 083.2187	DRALORIC	SMA/207/178K-F-C	
R15	RL 0,35W 60,4KOHM+-1%TK50 RESISTOR	RL 083.1851	DRALORIC	SMA0207/60,4K-F-C	
R16	RL 0,35W 36,5KOHM+-1%TK50 RESISTOR	RL 083.1716	DRALORIC	SMA0207/36,5K-F-C	
R17	RL 0,35W 27,4KOHM+-1%TK50 RESISTOR	RL 082.2583	DRALORIC	SMA 0207/27,4K-F-C	
R18	RL 0,35W22,6KOHM+-1%TK50 RESISTOR	RL 082.2219	DRALORIC	SMA0207/22,6K-F-C	
R19	RL 0,35W 19,6KOHM+-1%TK50 RESISTOR	RL 083.1516	DRALORIC	SMA/207/19,6K-F-C	
R20	RL 0,35W 18,2KOHM+-1%TK50 RESISTOR	RL 083.1480	DRALORIC	SMA/207/18,2K-F-C	

Kennz. Comp.No.	Benennung Designation	Sachnummer Stock No.	Hersteller Manufacturer	Bezeichnung Designation	enthalten in contained in
R21	RL 0,35W 17,4KOHM+-1%TK50 RESISTOR	RL 083.1468	DRALORIC	SMA0207/17,4K-F-C	
R22	RL 0,35W 17,4KOHM+-1%TK50 RESISTOR	RL 083.1468	DRALORIC	SMA0207/17,4K-F-C	
R23	RL 0,35W 18,2KOHM+-1%TK50 RESISTOR	RL 083.1480	DRALORIC	SMA/207/18,2K-F-C	
R24	RL 0,35W 19,6KOHM+-1%TK50 RESISTOR	RL 083.1516	DRALORIC	SMA/207/19,6K-F-C	
R25	RL 0,35W22,6KOHM+-1%TK50 RESISTOR	RL 082.2219	DRALORIC	SMA0207/22,6K-F-C	
R26	RL 0,35W 27,4KOHM+-1%TK50 RESISTOR	RL 082.2583	DRALORIC	SMA 0207/27,4K-F-C	
R27	RL 0,35W 36,5KOHM+-1%TK50 RESISTOR	RL 083.1716	DRALORIC	SMA0207/36,5K-F-C	
R28	RL 0,35W 60,4KOHM+-1%TK50 RESISTOR	RL 083.1851	DRALORIC	SMA0207/60,4K-F-C	
R29	RL 0,35W 178 KOHM+-1%TK50 RESISTOR	RL 083.2187	DRALORIC	SMA/207/178K-F-C	
R30	RL 0,35W 10,2KOHM+-1%TK50 RESISTOR	RL 082.2331	DRALORIC	SMA/207/10,2K-F-C	
R31	RS 0,3W2,OKOHM+-10%CERMET TRIMMING POTENTIOMETER	RS 006.9139	BECKMAN	67W 2KOHM 10%	
R32	RL 0,35W 10,OKOHM+-1%TK50 RESISTOR	RL 083.1297	DRALORIC	SMA0207/10K-F-D	
R33	RL 0,35W 10,OKOHM+-1%TK50 RESISTOR	RL 083.1297	DRALORIC	SMA0207/10K-F-D	
R34	RL 0,35W 10,OKOHM+-1%TK50 RESISTOR	RL 083.1297	DRALORIC	SMA0207/10K-F-D	
R35	RL 0,35W 17,4KOHM+-1%TK50 RESISTOR	RL 083.1468	DRALORIC	SMA0207/17,4K-F-C	
R36	RL 0,35W 57,6KOHM+-1%TK50 RESISTOR	RL 083.6830	DRALORIC	SMA0207/57,6K-F-C	
R37	RL 0,35W 19,1KOHM+-1%TK50 RESISTOR	RL 083.1500	DRALORIC	SMA/207/19,1K-F-C	
R38	RL 0,35W 35,7KOHM+-1%TK50 RESISTOR	RL 083.1700	DRALORIC	SMA0207/35,7K-F-C	
R39	RL 0,35W 30,1KOHM+-1%TK50 RESISTOR	RL 083.1639	DRALORIC	SMA0207/30,1K-F-C	
R40	RL 0,35W 53,6KOHM+-1%TK50 RESISTOR	RL 082.2590	DRALORIC	SMA 0207/53,6K-F-C	
R41	RL 0,35W 2,61KOHM+-1%TK50 RESISTOR	RL 083.0903	DRALORIC	SMA0207/2,61K-F-D	
R42	RL 0,35W 8,06KOHM+-1%TK50 RESISTOR	RL 083.1222	DRALORIC	SMA0207/8,06K-F-D	
R43	RL 0,35W4,64KOHM+-1%TK50 RESISTOR	RL 082.1687	DRALORIC	SMA0207/4,64K-F-C	
R44	RL 0,35W 6,49KOHM+-1%TK50 RESISTOR	RL 083.1168	DRALORIC	SMA0207/6,49K-F-D	
R45	RL 0,35W 6,34KOHM+-1%TK50 RESISTOR	RL 083.1151	DRALORIC	SMA0207/6,34K-F-D	
R46	RL 0,35W 7,15KOHM+-1%TK50 RESISTOR	RL 083.1174	DRALORIC	SMA0207/7,15K-F-D	
R47	RL 0,35W 1,21KOHM+-1%TK50 RESISTOR	RL 083.0655	DRALORIC	SMA0207/1,21K-F-D	
R48	RL 0,35W 3,40KOHM+-1%TK50 RESISTOR	RL 083.1000	DRALORIC	SMA0207/3,40K-F-D	
R49	RL 0,35W 1,69KOHM+-1%TK50 RESISTOR	RL 083.0778	DRALORIC	SMA0207/1,69K-F-D	
R50	RL 0,35W 2,37KOHM+-1%TK50 RESISTOR	RL 083.0878	DRALORIC	SMA0207/2,37K-F-D	
R51	RL 0,35W 1,0 OHM+-1%TK50 METALFILMRESISTOR	RL 099.7860	RESISTA	MK2 1,00 OHM 1% TK50	
R53	RL 0,35W 10,OKOHM+-1%TK50 RESISTOR	RL 083.1297	DRALORIC	SMA0207/10K-F-D	
R54	RL 0,35W 10,OKOHM+-1%TK50 RESISTOR	RL 083.1297	DRALORIC	SMA0207/10K-F-D	
R60	RL 0,35W 100 OHM+-1%TK50 METALFILM-RESISTOR	RL 082.6543	DRALORIC	SMA0207/100/HM-F-D	
R61	RL 0,35W 100 OHM+-1%TK50 METALFILM-RESISTOR	RL 082.6543	DRALORIC	SMA0207/100/HM-F-D	
V1	AE BZX79/C9V1 0,5W Z-DI ZENER DIODE	AE 012.2503	VALVO	BZX79/C9V1	
V2	AD 1N4448 75V 0,15A UDI DIODE	AD 012.0700	TEXAS INST	1N4448 GEGURTET	
X1	FP STECKERL.INDIR.64POLIG 64-PIN INSERT	FP 084.6470	PANDUIT	100-064-033/999	

uns alle Rechte vor

Kennz. Comp.No.	Benennung Designation	Sachnummer Stock No.	Hersteller Manufacturer	Bezeichnung Designation	enthalten in contained in
X2	FP BUCHSENLEISTE64P.ABGEW	FP 099.0614	PANDUIT	100-064-533/999	- ENDE -

Ansicht und Leitungsführ
View of tracks on compon

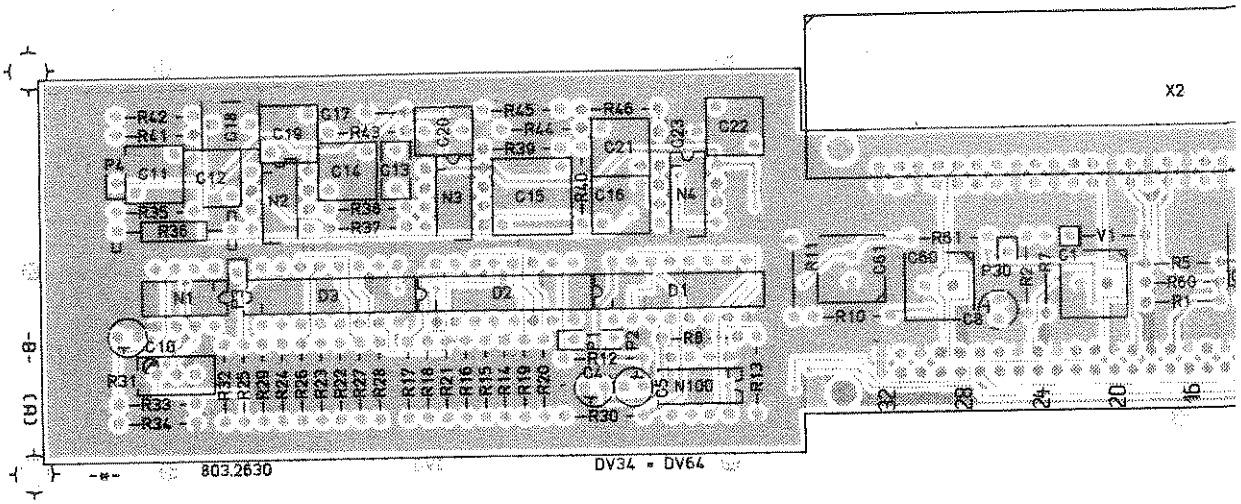

Ansicht und Leitungsführ
View of tracks on solder

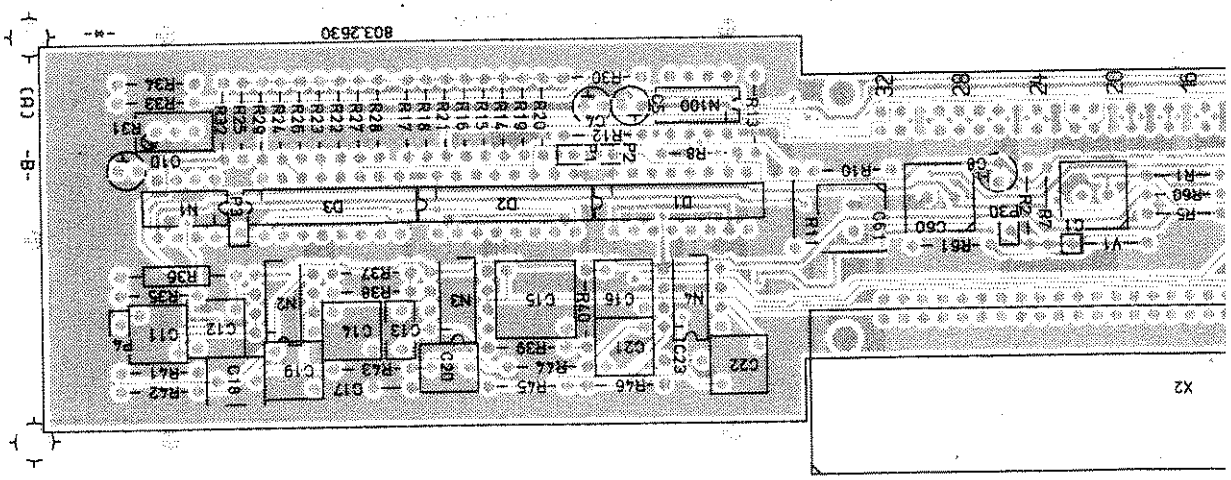

(hierzu HVC 250)

ACHTUNG: EGB!
Elektrostatisch gefährdete Bauelemente erfordern eine besondere Handhabung.

ATTENTION ESD!
Electrostatic sensitive devices require a special handling.

sführung Bauteilseite
mponent side

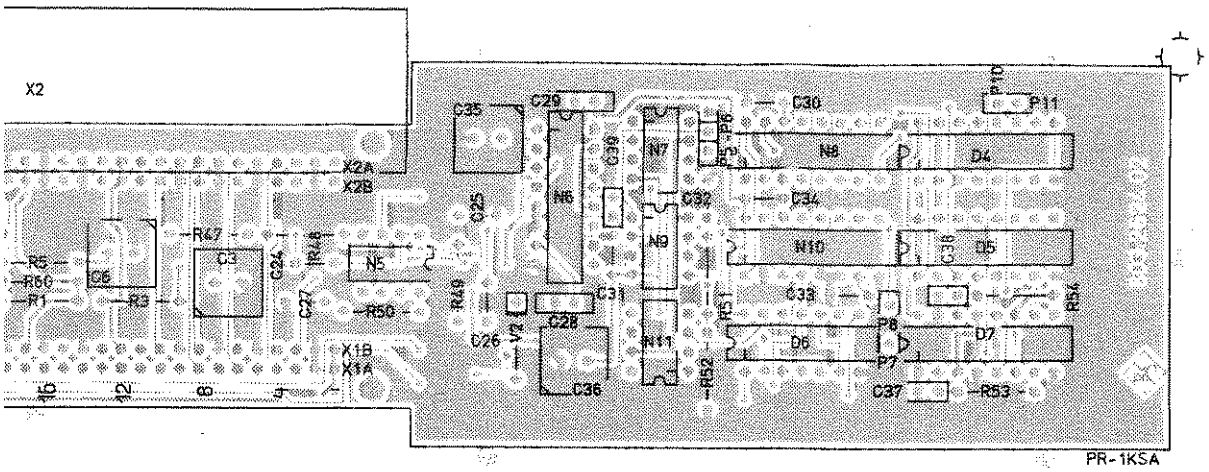

sführung Lötseite
der side

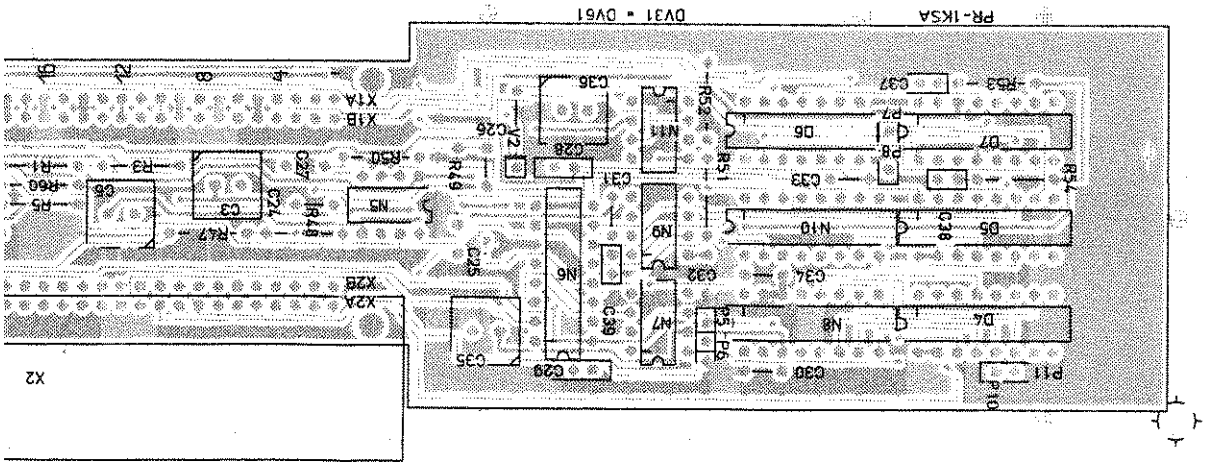

C	35549	12.86	PR	Maße ohne Toleranzangabe		Maßstab 1 : 1
						Halbzeug, Werkstoff
				1KSA	Tag	Name
				Bearb.	12.86	PR
				Gepr.		
				Norm		
Änd. Zust.	Änderungs-Mitteilung	Tag	Name	ROHDE&SCHWARZ		
				zu Gerät	671	

Benennung
2. NF-Synthesizer
2nd AF Synthesizer

Z

Zeichn.-Nr. 803.2624.01 EE

Blatt-Nr. 2 v. 2 Bl.

reg. i. V. 803.2618 V erste Z.

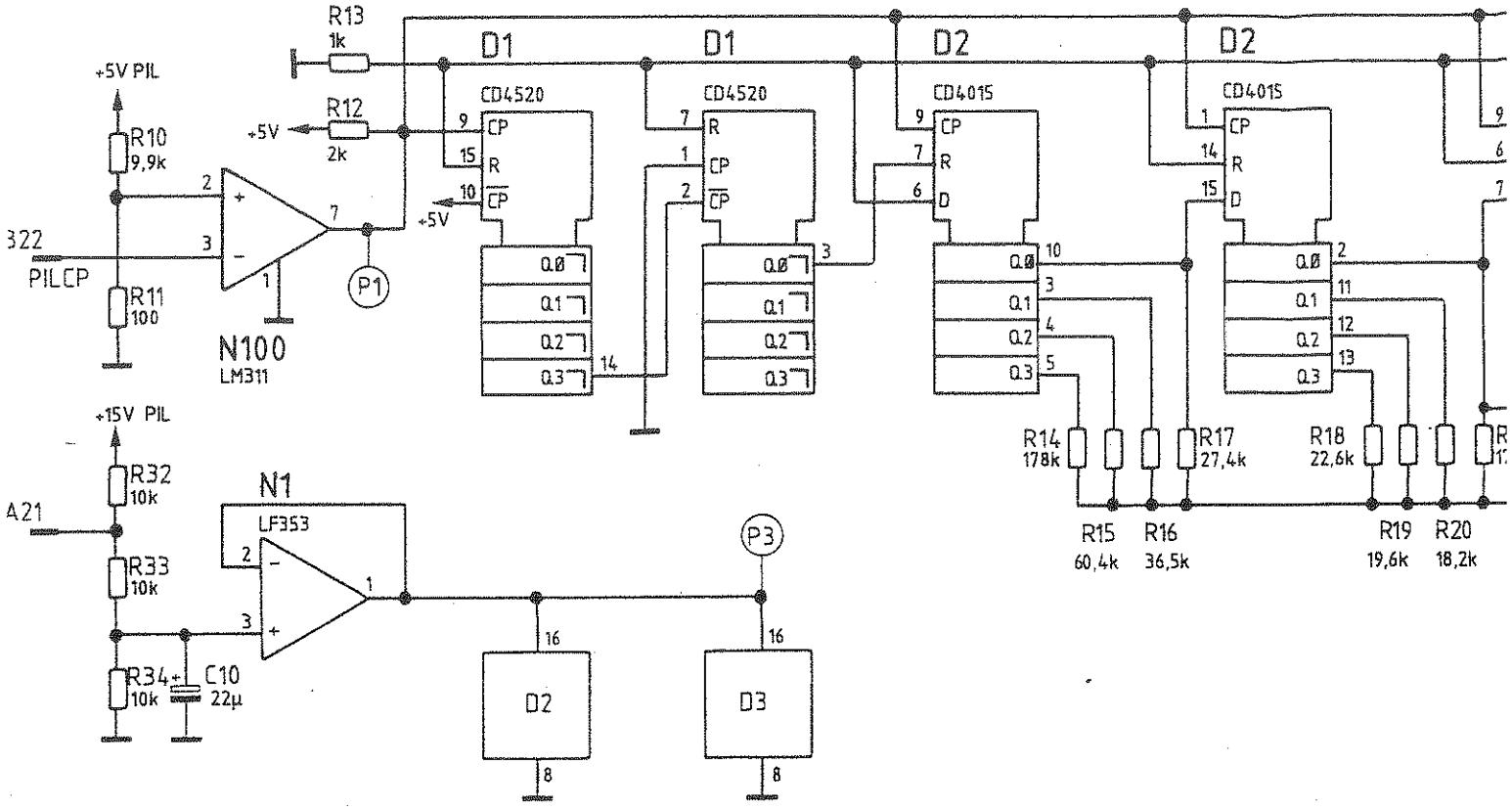
R13
1k
D1
D1
D2
D2
+5V PIL
R10
9,9k
R12
2k
+5V
CD4520
CD4520
CD4015
CD4015
CP
R
CP
CP
R
CP
CP
R
D
CP
R
D
+5V
322
PILCP
R11
100
N100
LM311
P1
Q0
Q1
Q2
Q3
+15V PIL
R32
10k
A21
R33
10k
R34
10k
C10
22µ
N1
LF353
P3
D2
D3
R14
178k
R15
60,4k
R16
36,5k
R17
27,4k
R18
22,6k
R19
19,6k
R20
18,2k

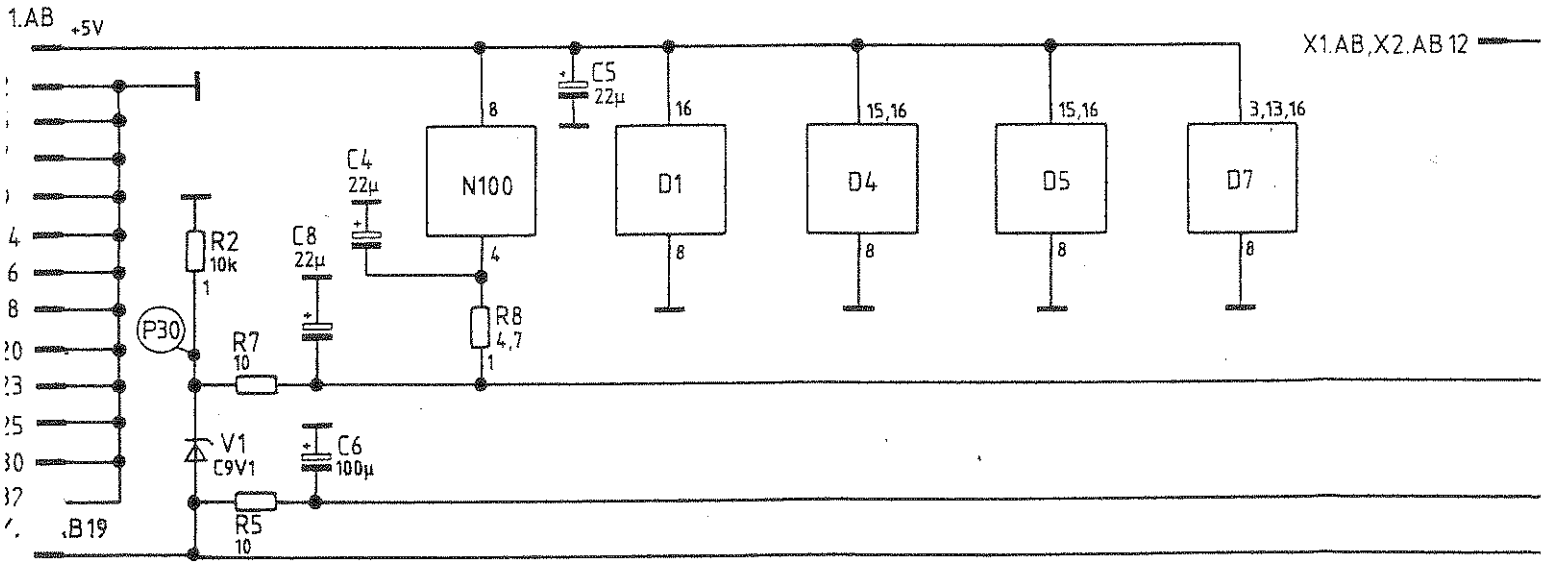
1.AB
+5V
X1.AB,X2.AB 12
C5
22µ
N100
D1
D4
D5
D7
C4
22µ
R2
10k
C8
22µ
P30
R7
10
R8
4,7
V1
C9V1
C6
100µ
R5
10
.B19

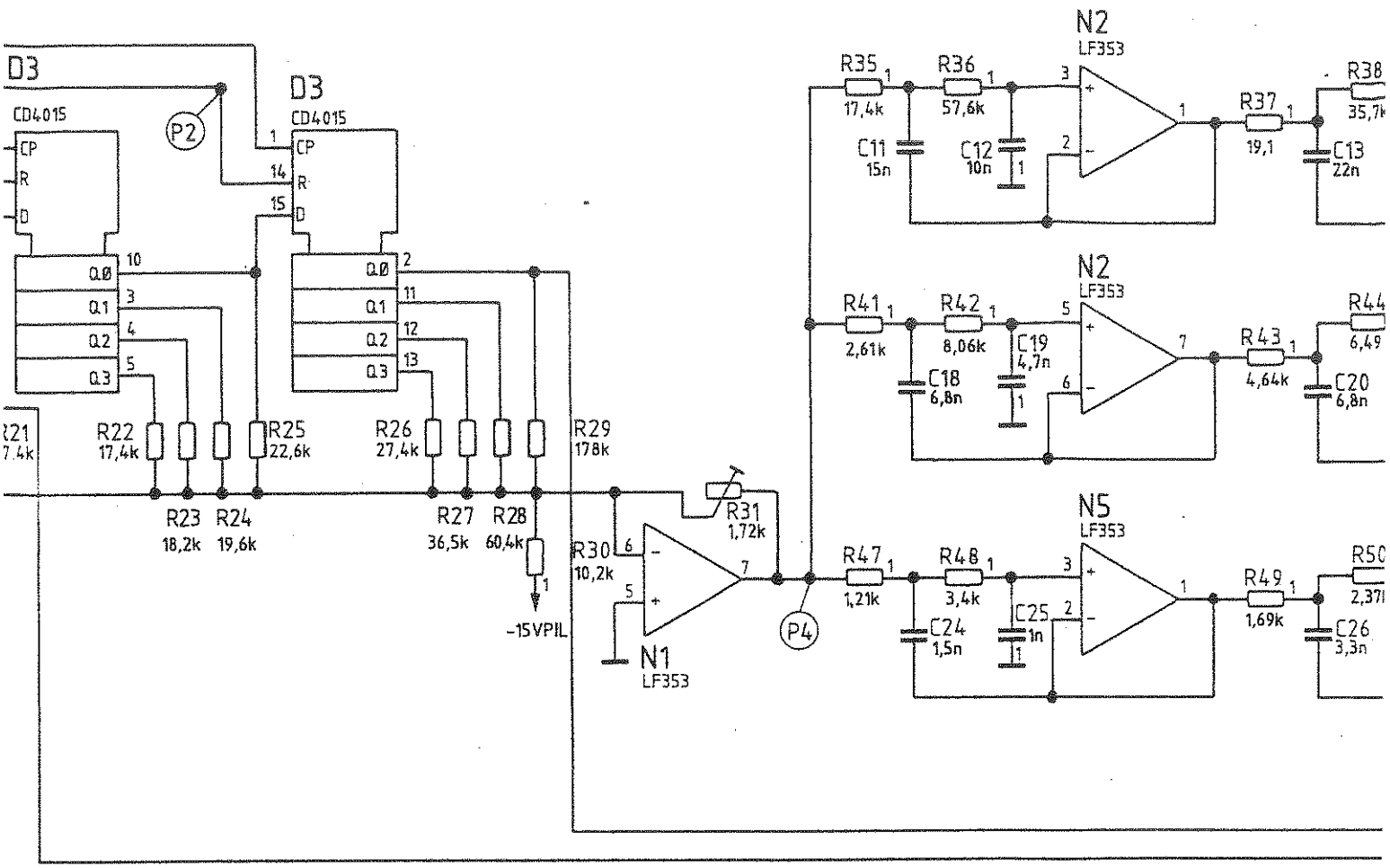
D3
CD4015
CP
R
D
Q0
Q1
Q2
Q3
P2
R21
7,4k
R22
17,4k
R23
18,2k
R24
19,6k
R25
22,6k
R26
27,4k
R27
36,5k
R28
60,4k
R29
178k
-15VPIL
R30
10,2k
R31
1,72k
N1
LF353
P4
R35
17,4k
R36
57,6k
C11
15n
C12
10n
N2
LF353
R37
19,1
R38
35,7k
C13
22n
R41
2,61k
R42
8,06k
C18
6,8n
C19
4,7n
R43
4,64k
R44
6,49
C20
6,8n
R47
1,21k
R48
3,4k
C24
1,5n
C25
1n
N5
LF353
R49
1,69k
R50
2,37k
C26
3,3n

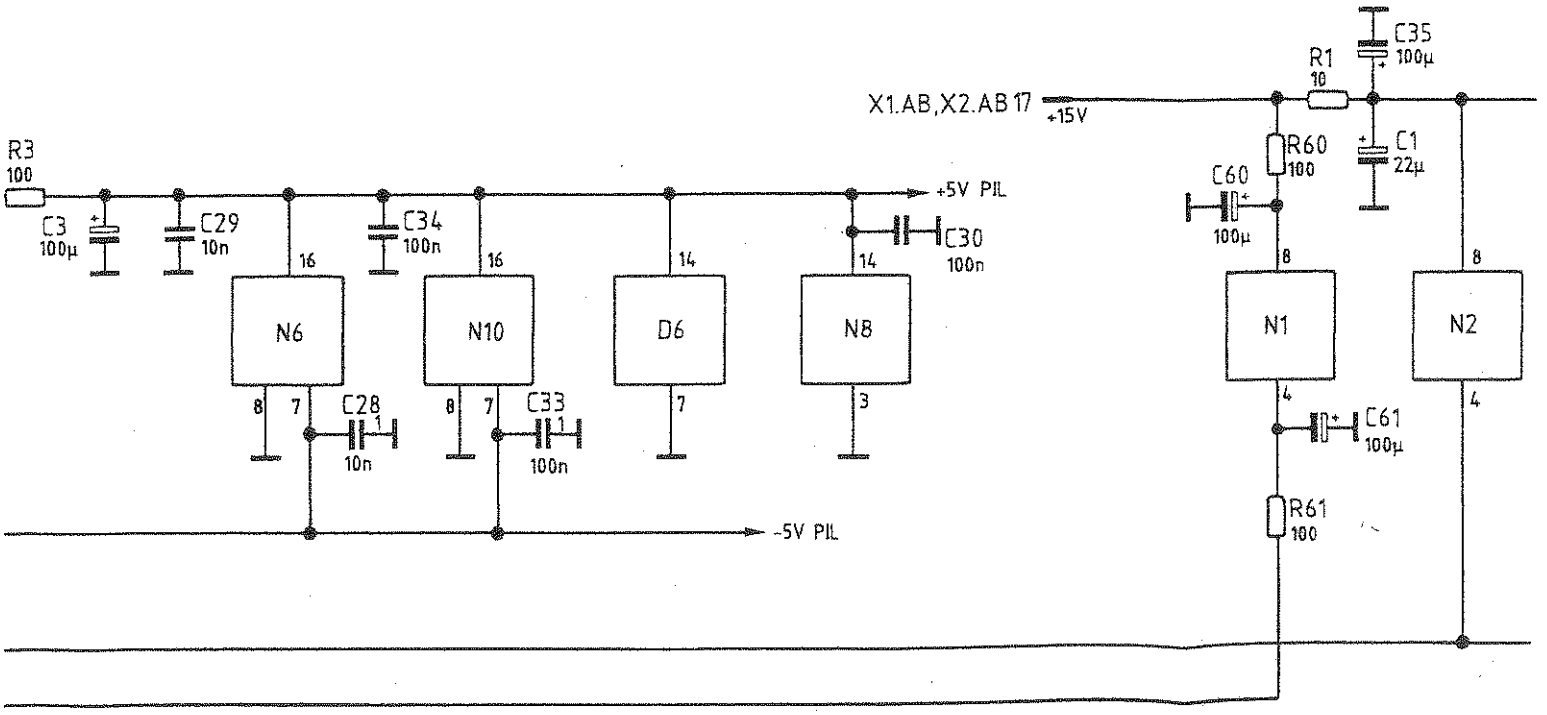
X1.AB,X2.AB 17
+15V
R1
10
C35
100µ
C1
22µ
R60
100
C60
100µ
N1
N2
C61
100µ
R61
100
R3
100
C3
100µ
C29
10n
C34
100n
N6
N10
D6
N8
C28
10n
C33
100n
C30
100n
+5V PIL
-5V PIL

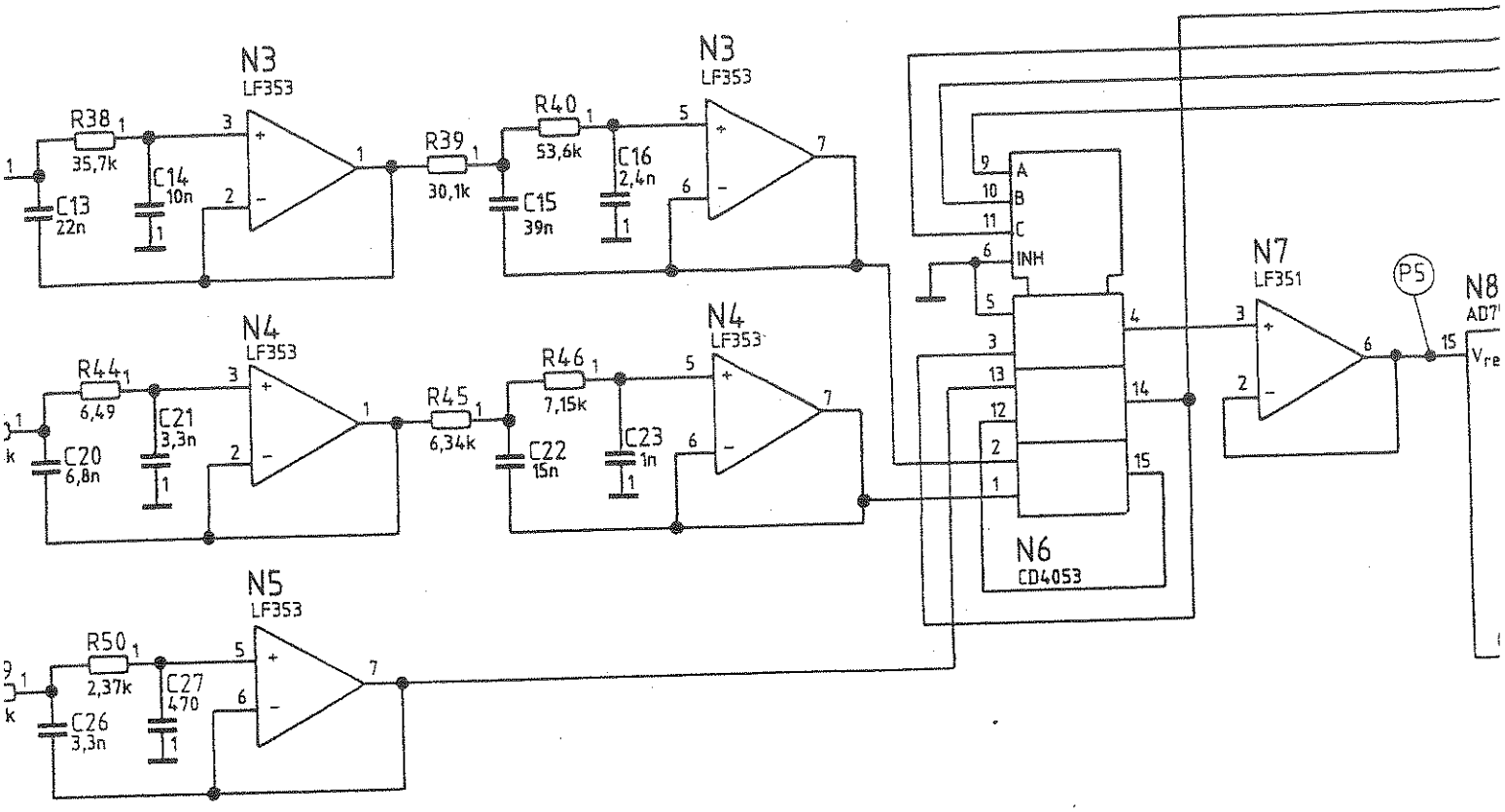
N3
LF353
R38
35,7k
C14
10n
C13
22n
R39
30,1k
R40
53,6k
C16
2,4n
C15
39n
N3
LF353
N4
LF353
R44
6,49
C21
3,3n
C20
6,8n
R45
6,34k
R46
7,15k
C22
15n
C23
1n
N4
LF353
N5
LF353
R50
2,37k
C27
470
C26
3,3n
A
B
C
INH
N6
CD4053
N7
LF351
P5
N8
AD7

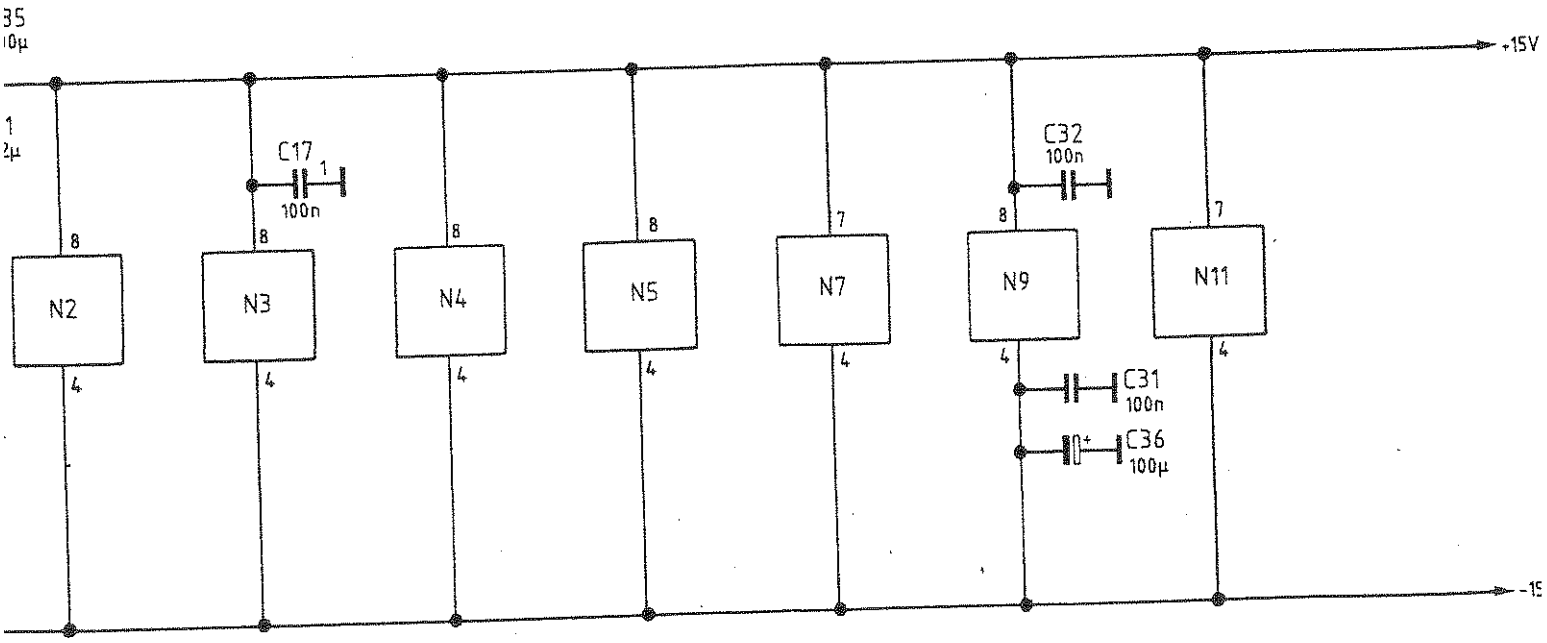
+15V
C17
100n
C32
100n
N2
N3
N4
N5
N7
N9
N11
C31
100n
C36
100µ

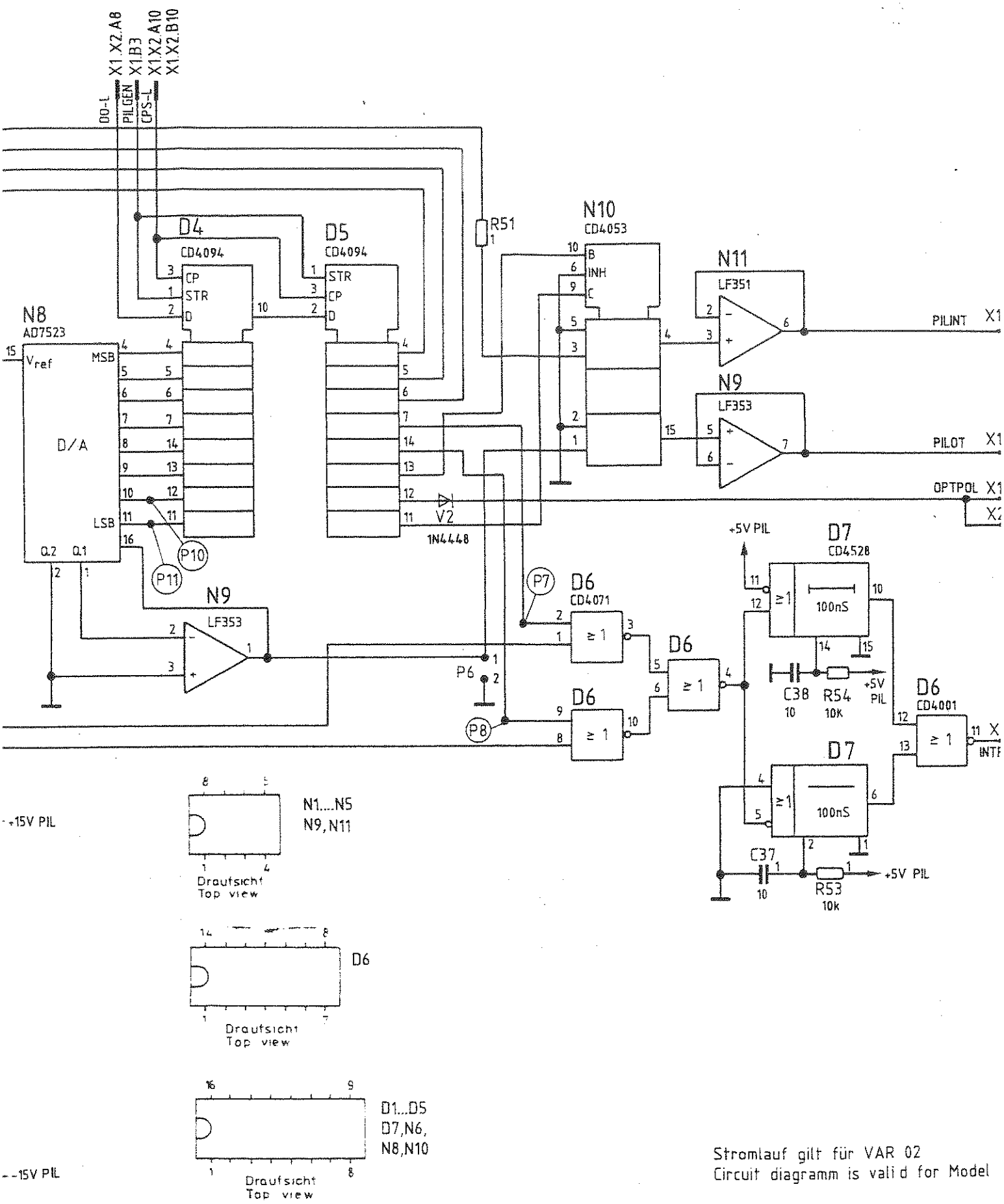

Stromlauf gilt für VAR 02
Circuit diagramm is valid for Model

Stromlauf zu 2.NF-Synthesizer / 2nd AF-Synthesizer		Z	Zeichn.-Nr. 803.2624 S
CMT-B7	reg. i V 803.2618 V	erste Z.	

PF 095 4115-0480

ROHDE & SCHWARZ

SERVICE INSTRUCTIONS

Adjacent-channel Power Meter

Option CMT-B6

803.7810.02

Contents

Page

5 Service Manual for Adjacent-channel Power Meter Option CMT-B6 ... 5.1

5.1 Function Description 5.1
5.1.1 800-MHz Fixed Oscillator 5.3
5.1.2 455-kHz IF Section 5.3

5.2 Testing and Adjustment 5.4
5.2.1 Testing the Fixed Oscillator 5.4
5.2.2 Testing the IF Section 5.5
5.2.3 Adjusting the Fixed Oscillator 5.6
5.2.3.1 Adjusting the Oscillator 5.6
5.2.3.2 Adjusting the Phase Control 5.6
5.2.3.3 Adjusting the Level Converter 5.7
5.2.3.4 Adjusting the Oscillator Output Power 5.7
5.2.4 Adjusting the IF Section 5.7
5.2.4.1 Adjusting the Offset 5.7
5.2.4.2 Adjusting the Balance 5.8

5.3 Interfaces 5.9

Component lists
Circuit diagrams
Component layout diagrams

5 Service Manual for Adjacent-channel Power Meter Option CMT-B6

(See circuit diagram 803.7832 S)

5.1 Function Description

The internal RF synthesizer, the RF amplifier and mixer modules on the analog unit and the adjacent-channel power meter module are used for adjacent-channel power measurements.

The adjacent-channel power meter module consists of two circuits which are almost independent of one another:

- A 800-MHz fixed oscillator of high spectral purity with a 1:2 divider.
- A 455-kHz IF section with the weighting filter, selectable amplifiers and an rms meter.

If a transmitter with an RF <200 MHz is to be measured, the transmitter frequency is directly converted to 455 kHz using the internal RF synthesizer. The signal quality of the internal RF synthesizer is sufficient in this frequency range to enable measurements up to approx. 80 dB.

If the transmitter frequency is in the 70-cm band (approx. 450 MHz) or in the 900-MHz band, conversion to 400 MHz or 800 MHz is required.

The adjacent-channel power measurement is made as follows (see flowchart) using the filter (E160) (the filter has a 3-dB bandwidth of approx. 3.5 kHz, a 6-dB bandwidth of approx. 4 kHz and a stopband attenuation of more than 80 dB) and several conversion processes.

Start adjacent-channel measurement

Calibration: The filter characteristic is measured using the internal RF generator. Of interest are:
- The passband peak
- The right and left 3-dB points (subfilter bandwidth)
- The right and left 6-dB points

Reference measurements: Detection of the nominal wanted channel. The subfilter bandwidth is applied to the wanted channel by means of several conversion processes. The conversion frequencies are selected such that the subfilter bandwidths are combined with the 3-dB points. With the 10-kHz and 12.5-kHz channel spacing: 2 subfilter bandwiths; with the 20-kHz channel spacing depending on the individual subfilter bandwidth: 3 or 4 subfilter bandwidths; with the 25-kHz channel spacing: 4 subfilter bandwidths.

The intermediate results (true rms values) are collected by the computer and stored.

Adjacent-channel measurement: The 6-dB point of the filter is converted to the limit of the nominal adjacent channel nearest to the carrier. Subfilter bandwidths are then added to the 3-dB points until the adjacent channel is covered. The wanted channel always remains in the stopband of the filter during these measurements.

The intermediate results are collected by the computer and stored. The computer calculates the carrier-to-unwanted power ratio from the measured value for the wanted channel and the adjacent channel.

Other measurements if necessary

Upper numeric limit reached with adjacent-channel measurements ?

No

Yes

Is it time to calibrate again ?

No

Yes

5.1.1 800-MHz Fixed Oscillator

(See circuit diagram 803.7832 S, sheet 1)

This part of the circuit contains a broadband phase controlled 800-MHz fixed oscillator (V70). The signal is first divided by 2 (D10) and then by 4 (D30) by coupling out with R67 and then applied to the phase comparator D35. The 100-MHz reference signal is applied to the phase comparator from X911 via line receiver D36. The loop filter N60 provides the control loop with a bandwidth of approx. 100 kHz. The 800-MHz signal from the decoupler R68 and the signal from D10 divided by 2 are applied to the RF relay K100. The 800-MHz or 400-MHz signal is applied to the LO gate of mixer E110.

Transmitter signals with frequencies <200 MHz are applied from X917 to X916 without conversion. Transmitter frequencies of approx. 450 MHz (70-cm band) are converted with 400 MHz to approx. 50 MHz and applied to X916 for further conversion. Corresponding conversion for transmitter frequencies from the 900-MHz band takes place using the 800-MHz fixed frequency. The level at X916 after conversion is the same as that at X917 before conversion.

5.1.2 455-kHz IF Section

(See circuit diagram 803.7832 S, sheet 2)

This part of the circuit receives the IF of 455 kHz with a level of approx. 270 mV which is amplified by V155 to approx. 1 V_{rms}. The ceramic filter with a pass bandwidth of approx. 4 kHz and a blocking of above 80 dB separates the wanted channel and the adjacent channel using the conversion processes carried out by the internal RF synthesizer. The circuit then contains 8 amplifier stages with a gain of 0 or 10 dB in order to drive the input of the rms meter N215 in the correct dynamic range. The rms meter is an active multiplier circuit with the same signal at both inputs (pins 5 and 9). The integration required for the rms measurement is handled by C222. Square-root extraction has been omitted which means that the DC voltage at output X1.A28 corresponds to the square of the rms input voltage at P10. The useful range of the DC voltage at output X1.A28 is between 0.5 and 5 V.

5.2 Testing and Adjustment

5.2.1 Testing the Fixed Oscillator

Test equipment:	RF synthesizer, e.g. SMPC	(at X917)
	Spectrum analyzer	(at X916)
	100-MHz crystal oscillator, e.g. from the basic instrument	(at X911)

→ Apply unmodulated signal of 50 mV to X917.

→ Switch relays K120 and K121 to the conversion path.

→ RF analyzer setting: centre 50 MHz, span 200 kHz

→ Connect K100 to the 800-MHz branch (pin 1) and set RF synthesizer to 850 MHz. A 50 MHz, 50 mV (±1 dB) signal with a high spectral purity must be measured on the RF analyzer.

→ Connect K100 to the 400-MHz branch (pin 9) and adjust the RF synthesizer to 450 MHz. The RF analyzer should indicate the same signal as before.

5.2.2 Testing the IF Section

Test equipment: AF synthesizer, e.g. SPN (at X918)
DC-Voltmeter (at X1.A28)

Measure the filter characteristic over its total dynamic range using the selectable amplifiers (0 and 10 dB).

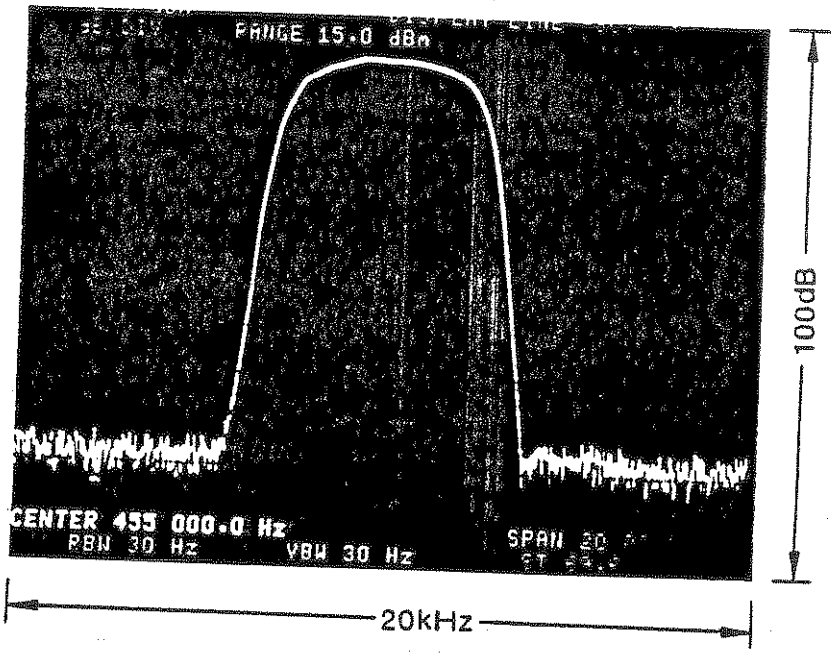

The relationship between the AC voltage and DC is logarithmic because the data are squared in the rms meter:

$$V_{DC}\ (\text{logarithmic}) = \text{approx. } 10 \times \log \frac{V_{rms}}{V_{ref}} - \text{gain (dB)}$$

5.2.3 Adjusting the Fixed Oscillator

Test equipment: Spectrum analyzer
Voltmeter
100-MHz crystal oscillator
RF synthesizer

Carry out the adjustment with the cover closed, since with the cover opened other results are obtained. The test setup corresponds to that in Section 5.2.1.

5.2.3.1 Adjusting the Oscillator

→ Apply a 100-MHz reference (ECL) to X911.

→ Apply 850 MHz (50 mV) to X917.

→ Connect spectrum analyzer to X916, centre 50 MHz, span 500 kHz.

→ Connect voltmeter to P18.

→ Set R78 and R52 to centre positions.

→ Set output frequency to 800 MHz (50 MHz on analyzer) using C65 and adjust tuning voltage to 12 V ±0.5 V at P18.

5.2.3.2 Adjusting the Phase Control

Adjust the control bandwidth to 100 kHz using R61.

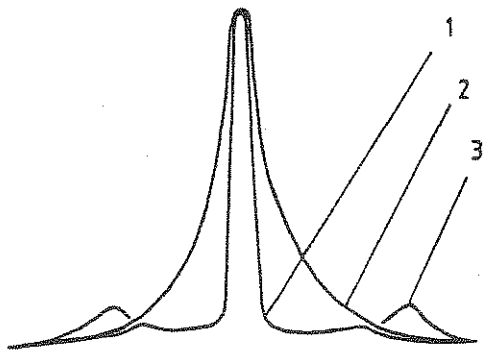

1 = correct

5.2.3.3 Adjusting the Level Converter

If the phase control does not lock when the power supply or the 100-MHz reference is switched on and off, the offset of the level converter must be adjusted.

→ Adjust R52 such that the PLL always locks.

5.2.3.4 Adjusting the Oscillator Output Power

→ Connect analyzer to K1.

→ Measure level of 400-MHz signal.

→ Set level of 800-MHz signal to the same value (approx. -7 dBm) using R78.

→ Check that both levels are the same.

5.2.4 Adjusting the IF Section

Test equipment:	AF synthesizer	(at X918)
	DC voltmeter	(at X1.A28)
	Oscilloscope	(at P11)

5.2.4.1 Adjusting the Offset

→ Apply 0 V to X918.

→ Set all amplifiers to 10 dB.

→ Adjust to 0 V (+10 mV/-0 mV) using R222.

5.2.4.2 Adjusting the Balance

→ Apply 270 mV, 455 kHz.

→ Set all amplifiers to 0 dB.

→ Remove C222.

→ Set the following signal shape on the oscilloscope using R226.

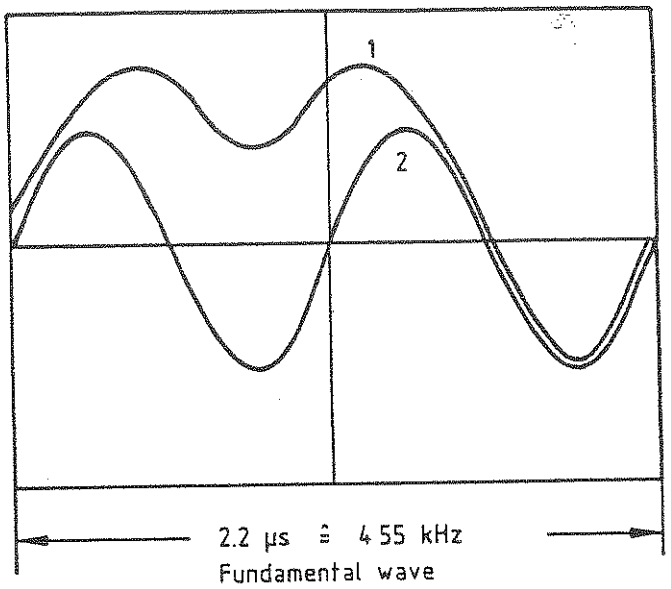

1 = not adjusted
2 = correctly adjusted

→ Insert C222 again.

→ Check offset adjustment.

5.3 Interfaces

Connectors	Input Output	De-signation	Value	Tolerance
X917	I	HF	50 mV	
X916	O	HF	50 mV	±1 dB
X911	I	100 MHz	ECL(to +5V)	
X918	I	ZF	270 mV	
X1.A28	O	DC	0.5 to 5V*)	
X1.A8	I	Data	CMOS 5 V	
X1.B10/A10	I	Clock	CMOS 5 V	
X1.A3	I	Strobe	CMOS 5 V	
X1.A1/B1	I	+5 V_D	approx. 230 mA	±30 mA
X1.A13/B13	I	+5 V_A	<25 mA	
X1.A17/B17	I	+15 V	approx. 60 mA	Without relay +60 mA/relay
X1.A19/B19	I	-15 V	approx. 40 mA	±10 mA
X1.A15/B15	I	+24 V	approx. 4 mA	±2 mA

*) Useful range of input voltage

ROHDE & SCHWARZ
MÜNCHEN

Schaltteillisten
Stromläufe
Bestückungspläne

Parts lists
Circuit diagrams
Components plans

R 29500 Bl. 2

ROHDE&SCHWARZ	ÄZ	Datum Date	Schaltteilliste für Parts list for	Sachnummer Stock No.	Blatt Page
	01	0386	CMT-B6 NKL-MESSER CMT-B6 ACP METER	803.7810.01 SA	1

Kennzeichen Component No.	Benennung/Beschreibung Designation	Sachnummer Stock No.	enthalten in contained in
A91	ED NKL-MESSER ACP METER	803.7832.02	
W20	DX HF-KABEL W20 RF CABLE	803.8045	
W21	DX HF-KABEL W21 RF CABLE	803.8051	
W23	DX HF-KABEL W23 RF CABLE	803.8068	
W24	DX HF-KABEL W24 RF CABLE	803.8074	

- ENDE -

Rechte vor

ROHDE & SCHWARZ	Äl	Datum Date	Schaltteilliste für Parts list for	Sachnummer Stock No.	Blatt Page
	06	0487	ED NKL-MESSER ACP METER	803.7832.01 SA	1

Kennzeichen Component No.	Benennung/Beschreibung Designation	Sachnummer Stock No.	enthalten in contained in
C1	CC 1NF+-10%50VX7R 1206 CERAMIC CHIP CAPACITOR VITRAMON VJ1206Y102KFA	CC 099.8438	
C2	CC 1NF+-10%50VX7R 1206 CERAMIC CHIP CAPACITOR VITRAMON VJ1206Y102KFA	CC 099.8438	
C3	CC 10NF+-10%50V X7R 1206 CERAMIC CHIP CAPACITOR VITRAMON VJ1206Y103KFA	CC 099.8521	
C5	CC 1NF+-10%50VX7R 1206 CERAMIC CHIP CAPACITOR VITRAMON VJ1206Y102KFA	CC 099.8438	
C6	CC 1NF+-10%50VX7R 1206 CERAMIC CHIP CAPACITOR VITRAMON VJ1206Y102KFA	CC 099.8438	
C7	CC 10NF+-10%50V X7R 1206 CERAMIC CHIP CAPACITOR VITRAMON VJ1206Y103KFA	CC 099.8521	
C10	CC 1NF+-10%50VX7R 1206 CERAMIC CHIP CAPACITOR VITRAMON VJ1206Y102KFA	CC 099.8438	
C11	CC 1NF+-10%50VX7R 1206 CERAMIC CHIP CAPACITOR VITRAMON VJ1206Y102KFA	CC 099.8438	
C12	CC 1NF+-10%50VX7R 1206 CERAMIC CHIP CAPACITOR VITRAMON VJ1206Y102KFA	CC 099.8438	
C14	CC 10NF+-10%50V X7R 1206 CERAMIC CHIP CAPACITOR VITRAMON VJ1206Y103KFA	CC 099.8521	
C15	CK 33NF+-5%63V5RM MKT CAPACITOR WIMA MKS2/63/0,033UF/5%	CK 099.2900	
C16	CC 220PF+-5%50V NPO 1206 CERAMIC CHIP CAPACITOR VITRAMON VJ1206A221JFA	CC 099.8850	
C30	CK 33NF+-5%63V5RM MKT CAPACITOR WIMA MKS2/63/0,033UF/5%	CK 099.2900	
C31	CC 1NF+-10%50VX7R 1206 CERAMIC CHIP CAPACITOR VITRAMON VJ1206Y102KFA	CC 099.8438	
C32	CC 1NF+-10%50VX7R 1206 CERAMIC CHIP CAPACITOR VITRAMON VJ1206Y102KFA	CC 099.8438	
C35	CC 1NF+-10%50VX7R 1206 CERAMIC CHIP CAPACITOR VITRAMON VJ1206Y102KFA	CC 099.8438	
C36	CC 1NF+-10%50VX7R 1206 CERAMIC CHIP CAPACITOR VITRAMON VJ1206Y102KFA	CC 099.8438	
C37	CC 100NF+-10% 50V5K1200 C CAPACITOR VITRAMON VJ1812Y104KFA	CC 082.3473	

uns alle Rechte vor

ROHDE & SCHWARZ	Äl	Datum Date	Schaltteilliste für Parts list for	Sachnummer Stock No.	Blatt Page
	06	0487	ED NKL-MESSER ACP METER	803.7832.01 SA	2

Kennzeichen Component No.	Benennung/Beschreibung Designation	Sachnummer Stock No.	enthalten in contained in
C55	CC 10NF+-10%50V X7R 1206 CERAMIC CHIP CAPACITOR VITRAMON VJ1206Y103KFA	CC 099.8521	
C56	CC 10NF+-10%50V X7R 1206 CERAMIC CHIP CAPACITOR VITRAMON VJ1206Y103KFA	CC 099.8521	
C59	CC 2,2NF+-10%50VX7R 1206 CERAMIC CHIP CAPACITOR VITRAMON VJ1206Y222KFA	CC 099.8444	
C60	CC 2,2NF+-10%50VX7R 1206 CERAMIC CHIP CAPACITOR VITRAMON VJ1206Y222KFA	CC 099.8444	
C61	CC 10NF-20+50%7X8R4000 CAPACITOR VALVO 2222 63051 64051103	CC 087.7525	
C62	CC 1NF+-10%50VX7R 1206 CERAMIC CHIP CAPACITOR VITRAMON VJ1206Y102KFA	CC 099.8438	
C63	CC 10NF-20+50%7X8R4000 CAPACITOR VALVO 2222 63051 64051103	CC 087.7525	
C64	CC 1NF+-10%63V K2000 CERAMIC CAPACITOR VALVO 2222 63051 102	CC 022.0784	
C65	CT 9,2PF TAUCHTR.RD 7X12 AIR-TYPE TRIMMER TEKELEC LUFTTRAT5200	CT 025.7367	
C66	CC 0,5PF+-0,25PF50V NPO CERAMIC CHIP CAPACITOR ERIE GR42-6 0,5PF NP050V	099.8650	
C67	CC 12PF+-5%50V NPO 1206 CERAMIC CHIP CAPACITOR VITRAMON VJ1206A120JFA	CC 099.8744	
C68	CC 12PF+-5%50V NPO 1206 CERAMIC CHIP CAPACITOR VITRAMON VJ1206A120JFA	CC 099.8744	
C70	CC 7PF+-0,5PF50V NPO 1206 CERAMIC CHIP CAPACITOR VITRAMON VJ1206A7R0DFA	CC 099.8715	
C71	CC 5PF+-0,5PF50V NPO 1206 CERAMIC CHIP CAPACITOR VITRAMON VJ1206A5R0DFA	CC 099.8696	
C72	CC 22PF+-5%50V NPO 1206 CERAMIC CHIP CAPACITOR VITRAMON VJ1206A220JFA	CC 099.8396	
C73	CC 4PF+-0,25PF50V NPO1206 CERAMIC CHIP CAPACITOR VITRAMON VJ1206A4R0CFA	CC 099.8680	
C75	CC 22PF+-5%50V NPO 1206 CERAMIC CHIP CAPACITOR VITRAMON VJ1206A220JFA	CC 099.8396	
C80	CC 4,7NF+-10%6X9R2000 CAPACITOR VALVO 2222 63051 472	CC 087.7102	
C90	CC 1NF+-10%50VX7R 1206 CERAMIC CHIP CAPACITOR VITRAMON VJ1206Y102KFA	CC 099.8438	

ROHDE & SCHWARZ	Äl	Datum Date	Schaltteilliste für Parts list for	Sachnummer Stock No.	Blatt Page
	06	0487	ED NKL-MESSER ACP METER	803.7832.01 SA	3

Kennzeichen Component No.	Benennung/Beschreibung Designation	Sachnummer Stock No.	enthalten in contained in
C91	CC 10NF+-10%50V X7R 1206 CERAMIC CHIP CAPACITOR VITRAMON VJ1206Y103KFA	CC 099.8521	
C92	CC 1NF+-10%50VX7R 1206 CERAMIC CHIP CAPACITOR VITRAMON VJ1206Y102KFA	CC 099.8438	
C95	CC 47NF+-10%100V5K1200 C CAPACITOR VITRAMON VJ1812Y473KFB	CC 082.3438	
C100	CC 1NF+-10%50VX7R 1206 CERAMIC CHIP CAPACITOR VITRAMON VJ1206Y102KFA	CC 099.8438	
C101	CC 1NF+-10%50VX7R 1206 CERAMIC CHIP CAPACITOR VITRAMON VJ1206Y102KFA	CC 099.8438	
C103	CC 10NF+-10%50V X7R 1206 CERAMIC CHIP CAPACITOR VITRAMON VJ1206Y103KFA	CC 099.8521	
C105	CC 10NF+-10%50V X7R 1206 CERAMIC CHIP CAPACITOR VITRAMON VJ1206Y103KFA	CC 099.8521	
C106	CC 1NF+-10%50VX7R 1206 CERAMIC CHIP CAPACITOR VITRAMON VJ1206Y102KFA	CC 099.8438	
C107	CC 4PF+-0,25PF50V NP01206 CERAMIC CHIP CAPACITOR VITRAMON VJ1206A4R0CFA	CC 099.8680	
C108	CC 1NF+-10%50VX7R 1206 CERAMIC CHIP CAPACITOR VITRAMON VJ1206Y102KFA		
C110	CC 1NF+-10%50VX7R 1206 CERAMIC CHIP CAPACITOR VITRAMON VJ1206Y102KFA	CC	
C111	CC 1NF+-10%50VX7R 1206 CERAMIC CHIP CAPACITOR VITRAMON VJ1206Y102KFA	CC 099..	
C115	CC 47NF+-10%100V5K1200 C CAPACITOR VITRAMON VJ1812Y473KFB	CC 082.3438	
C116	CC 10NF+-10%50V X7R 1206 CERAMIC CHIP CAPACITOR VITRAMON VJ1206Y103KFA	CC 099.8521	
C117	CC 47NF+-10%100V5K1200 C CAPACITOR VITRAMON VJ1812Y473KFB	CC 082.3438	
C120	CC 15PF+-5%50V NPO 1206 CERAMIC CHIP CAPACITOR VITRAMON VJ1206A150JFA	CC 099.8750	
C121	CC 27PF+-5%50V NPO 1206 CERAMIC CHIP CAPACITOR VITRAMON VJ1206A270JFA	CC 099.8409	
C122	CC 27PF+-5%50V NPO 1206 CERAMIC CHIP CAPACITOR VITRAMON VJ1206A270JFA	CC 099.8409	
C123	CC 15PF+-5%50V NPO 1206 CERAMIC CHIP CAPACITOR VITRAMON VJ1206A150JFA	CC 099.8750	

uns all – Rechte vor

Kennzeichen Component No.	Benennung/Beschreibung Designation	Sachnummer Stock No.	enthalten in contained in
C124	CC 47NF+-10%100V5K1200 C CAPACITOR VITRAMON VJ1812Y473KFB	CC 082.3438	
C156	CE 100UF+-20%25V 8RDX9,5 ELECTROLYTIC CAPACITOR MATSUSHITA ECE-A1ESS-101	803.0580	
C157	CC 1NF+-10%63V K2000 CERAMIC CAPACITOR VALVO 2222 63051 102	CC 022.0784	
C158	CC 10NF-20+50%7X8R4000 CAPACITOR VALVO 2222 63051 64051103	CC 087.7525	
C159	CK 100NF+-5%63V5RM MKT CAPACITOR WIMA MKS/2/63/0,1UF/5%	CK 099.2930	
C160	CE 100UF+-20%25V 8RDX9,5 ELECTROLYTIC CAPACITOR MATSUSHITA ECE-A1ESS-101	803.0580	
C165	CE 100UF+-20%25V 8RDX9,5 ELECTROLYTIC CAPACITOR MATSUSHITA ECE-A1ESS-101	803.0580	
C166	CK 100NF+-5%63V5RM MKT CAPACITOR WIMA MKS/2/63/0,1UF/5%	CK 099.2930	
C167	CE 100UF+-20%25V 8RDX9,5 ELECTROLYTIC CAPACITOR MATSUSHITA ECE-A1ESS-101	803.0580	
C168	CK 100NF+-5%63V5RM MKT CAPACITOR WIMA MKS/2/63/0,1UF/5%	CK 099.2930	
C170	CK 100NF+-5%63V5RM MKT CAPACITOR WIMA MKS/2/63/0,1UF/5%	CK 099.2930	
C171	CK 100NF+-5%63V5RM MKT CAPACITOR WIMA MKS/2/63/0,1UF/5%	CK 099.2930	
C172	CK 100NF+-5%63V5RM MKT CAPACITOR WIMA MKS/2/63/0,1UF/5%	CK 099.2930	
C175	CK 100NF+-5%63V5RM MKT CAPACITOR WIMA MKS/2/63/0,1UF/5%	CK 099.2930	
C176	CK 100NF+-5%63V5RM MKT CAPACITOR WIMA MKS/2/63/0,1UF/5%	CK 099.2930	
C177	CK 100NF+-5%63V5RM MKT CAPACITOR WIMA MKS/2/63/0,1UF/5%	CK 099.2930	
C180	CK 100NF+-5%63V5RM MKT CAPACITOR WIMA MKS/2/63/0,1UF/5%	CK 099.2930	
C181	CK 100NF+-5%63V5RM MKT CAPACITOR WIMA MKS/2/63/0,1UF/5%	CK 099.2930	
C182	CK 100NF+-5%63V5RM MKT CAPACITOR WIMA MKS/2/63/0,1UF/5%	CK 099.2930	

Kennzeichen Component No.	Benennung/Beschreibung Designation	Sachnummer Stock No.	enthalten in contained in
C185	CK 100NF+-5%63V5RM MKT CAPACITOR WIMA MKS/2/63/0,1UF/5%	CK 099.2930	
C186	CK 100NF+-5%63V5RM MKT CAPACITOR WIMA MKS/2/63/0,1UF/5%	CK 099.2930	
C187	CK 100NF+-5%63V5RM MKT CAPACITOR WIMA MKS/2/63/0,1UF/5%	CK 099.2930	
C190	CK 100NF+-5%63V5RM MKT CAPACITOR WIMA MKS/2/63/0,1UF/5%	CK 099.2930	
C191	CK 100NF+-5%63V5RM MKT CAPACITOR WIMA MKS/2/63/0,1UF/5%	CK 099.2930	
C192	CK 100NF+-5%63V5RM MKT CAPACITOR WIMA MKS/2/63/0,1UF/5%	CK 099.2930	
C195	CE 220UF+-20%16V10RDX10 ELEKTROLYTIC CAPACITOR NATIONAL ECE-A1CSS-221	803.0850	
C196	CK 100NF+-5%63V5RM MKT CAPACITOR WIMA MKS/2/63/0,1UF/5%	CK 099.2930	
C197	CE 100UF+-20%25V 8RDX9,5 ELECTROLYTIC CAPACITOR MATSUSHITA ECE-A1ESS-101	803.0580	
C198	CK 100NF+-5%63V5RM MKT CAPACITOR WIMA MKS/2/63/0,1UF/5%	CK 099.2930	
C199	CK 100NF+-5%63V5RM MKT CAPACITOR WIMA MKS/2/63/0,1UF/5%	CK 099.2930	
C200	CK 100NF+-5%63V5RM MKT CAPACITOR WIMA MKS/2/63/0,1UF/5%	CK 099.2930	
C201	CK 100NF+-5%63V5RM MKT CAPACITOR WIMA MKS/2/63/0,1UF/5%	CK 099.2930	
C202	CK 100NF+-5%63V5RM MKT CAPACITOR WIMA MKS/2/63/0,1UF/5%	CK 099.2930	
C205	CK 100NF+-5%63V5RM MKT CAPACITOR WIMA MKS/2/63/0,1UF/5%	CK 099.2930	
C210	CK 100NF+-5%63V5RM MKT CAPACITOR WIMA MKS/2/63/0,1UF/5%	CK 099.2930	
C211	CK 100NF+-5%63V5RM MKT CAPACITOR WIMA MKS/2/63/0,1UF/5%	CK 099.2930	
C212	CC 1,5NF+-10%4X5R2000 CAPACITOR VALVO 2222 63051 152	CC 087.7048	
C214	CC 1,5NF+-10%4X5R2000 CAPACITOR VALVO 2222 63051 152	CC 087.7048	

Alle Rechte vor uns

Kennzeichen Component No.	Benennung/Beschreibung Designation	Sachnummer Stock No.	enthalten in contained in
C220	CE 22UF+-20%16V5RDX5RAD.A ELECTROLYTIC CAPACITOR NCC SRE 22UF/16V+-20%	358.6062	
C221	CK 100NF+-5%63V5RM MKT CAPACITOR WIMA MKS/2/63/0,1UF/5%	CK 099.2930	
C222	CE 22UF+-20%16V5RDX5RAD.A ELECTROLYTIC CAPACITOR NCC SRE 22UF/16V+-20%	358.6062	
C223	CK 100NF+-5%63V5RM MKT CAPACITOR WIMA MKS/2/63/0,1UF/5%	CK 099.2930	
C230	CE 22UF+-20%16V5RDX5RAD.A ELECTROLYTIC CAPACITOR NCC SRE 22UF/16V+-20%	35[illegible]	
C240	CC 100PF+- 5%100V NPO VIE CERAMIC CAPACITOR UNIONCARB C052C101J2G1CA		
C242	CK 470NF+-5%63V5RM MKT CAPACITOR WIMA MKS2/63/0,4[illegible]		
C250	CC 3,3NF+-10%6X7R200[illegible] CAPACITOR VALVO 2222 [illegible]		
C251	CC 3,3NF+-10%6[illegible] CAPACITOR VALVO		
C255	CE 100UF+		
C285			
C286	MA[illegible] CC 10NF- CAPACITOR VALVO		
C287	CC 10NF-20+5 CAPACITOR VALVO 2222		
D10	BL SP8605BDG 2:1DI[illegible] DIVIDER PLESSEY SP8605BDG		

ROHDE&SCHWARZ	Äl	Datum / Date	Schaltteilliste für / Parts list for	Sachnummer / Stock No.	Blatt / Page
	06	0487	ED NKL-MESSER ACP METER	803.7832.01 SA	7

Kennzeichen / Component No.	Benennung/Beschreibung / Designation	Sachnummer / Stock No.	enthalten in / contained in
D30	BL CA3199E 4:1 DIVIDER DIVIDER RCA CA3199E	372.1106	
D35	BL MC12040L PLL-PHASE-DET PHASE FREQUENCY DETECTOR MOTOROLA MC12040L	BL 302.5877	
D36	BL MC10116L 3XL. RECEIV LINE RECEIVER MOTOROLA MC10116L	BL 282.3275	
D165	BL CD4053BE 3X2CH. MUX MULTIPLEXER RCA CD4053BE	BL 565.3080	
D175	BL CD4053BE 3X2CH. MUX MULTIPLEXER RCA CD4053BE	BL 565.3080	
D185	BL CD4053BE 3X2CH. MUX MULTIPLEXER RCA CD4053BE	BL 565.3080	
D195	BL CD4053BE 3X2CH. MUX MULTIPLEXER RCA CD4053BE	BL 565.3080	
D205	BL CD4094BE 8BIT SH.REG SHIFT REGISTER RCA CD4094BE	BL 586.7726	
D206	BL CD4094BE 8BIT SH.REG SHIFT REGISTER RCA CD4094BE	BL 586.7726	
E110	BM TFM2 MIXER 1.0GHZ MIXER MCL TFM-2	BM 302.6080	
E160	ER 455KHZ-BANDP.KER.B:3K 455MHZ-BANDPASS,CER.,BW3K MURATA CFK455J-A SELEKTIERT	803.0844	
K100	SN HF-RELAIS 12V 1XUM RELAY SDS RF1E-12V	803.0821	
K120	SN HF-RELAIS 12V 1XUM RELAY SDS RF1E-12V	803.0821	
K121	SN HF-RELAIS 12V 1XUM RELAY SDS RF1E-12V	803.0821	
L1	LD 10,0UH10%3,300HM0,144A CHOKE DELEVAN DROSSEL1025-44	LD 026.4184	
L5	LD 10,0UH10%3,300HM0,144A CHOKE DELEVAN DROSSEL1025-44	LD 026.4184	
L60	LD 10,0UH10%3,300HM0,144A CHOKE DELEVAN DROSSEL1025-44	LD 026.4184	
L65	LL INDUKTIVITAET INDUCTOR	803.8080	

Kennzeichen Component No.	Benennung/Beschreibung Designation	Sachnummer Stock No.	enthalten in contained in
L70	LD 12,0UH10%2,700HM0,160A CHOKE DELEVAN DROSSEL1025-46	LD 067.2992	
L71	LD SPULE COIL	803.8100	
L73	LD 12,0UH10%2,700HM0,160A CHOKE DELEVAN DROSSEL1025-46	LD 067.2992	
L74	LD SPULE COIL	803.8100	
L80	LD 10,0UH10%3,300HM0,144A CHOKE DELEVAN DROSSEL1025-44	LD 026.4184	
L90	LD 10,0UH10%3,300HM0,144A CHOKE DELEVAN DROSSEL1025-44	LD 026.4184	
L105	LD 10,0UH10%3,300HM0,144A CHOKE DELEVAN DROSSEL1025-44	LD 026.4184	
L106	LD 0,047 UH 10% CHOKE INDUSTRIA BAUREIHE1025,0,047	249.5995	
L107	LD 0,047 UH 10% CHOKE INDUSTRIA BAUREIHE1025,0,047	249.5995	
L108	LD 0,047 UH 10% CHOKE INDUSTRIA BAUREIHE1025,0,047	249.5995	
L109	LD 0,047 UH 10% CHOKE INDUSTRIA BAUREIHE1025,0,047	249.5995	
L115	LD 10,0UH10%3,300HM0,144A CHOKE DELEVAN DROSSEL1025-44	LD 026.4184	
L120	LD 0,10UH10%0,080HM1,400A CHOKE DELEVAN DROSSEL1025-94	LD 067.2740	
L121	LD 0,15UH10%0,100HM1,230A CHOKE DELEVAN DROSSEL1025-00	LD 067.2763	
L122	LD 0,10UH10%0,080HM1,400A CHOKE DELEVAN DROSSEL1025-94	LD 067.2740	
L125	LD 0,12UH10%0,090HM1,300A CHOKE DELEVAN DROSSEL1025-96	LD 067.2757	
L126	LD 0,12UH10%0,090HM1,300A CHOKE DELEVAN DROSSEL1025-96	LD 067.2757	
L127	LD 0,12UH10%0,090HM1,300A CHOKE DELEVAN DROSSEL1025-96	LD 067.2757	
L213	LD 100 UH10%8,000HM0,084A CHOKE DELEVAN DROSSEL1025-68	LD 067.3101	

ROHDE&SCHWARZ	Äl	Datum Date	Schaltteilliste für Parts list for	Sachnummer Stock No.	Blatt Page
	06	0487	ED NKL-MESSER ACP METER	803.7832.01 SA	9

Kennzeichen Component No.	Benennung/Beschreibung Designation	Sachnummer Stock No.	enthalten in contained in
L214	LD 100 UH10%8,000HM0,084A CHOKE DELEVAN DROSSEL1025-68	LD 067.3101	
L285	LD 0,10UH10%0,080HM1,400A CHOKE DELEVAN DROSSEL1025-94	LD 067.2740	
N1	BM OM345 ANTENNEN-VERST ANTENNA AMPLIFIER VALVO OM345	BM 285.1596	
N5	BM OM345 ANTENNEN-VERST ANTENNA AMPLIFIER VALVO OM345	BM 285.1596	
N60	BO SE5534AFE LOW N.OPAMP OPERATIONAL AMPLIFIER SIGNETICS SE5534AFE	301.3335	
N90	BM OM350 ANTENNEN-VERST ANTENNA AMPLIFIER VALVO OM350	BM 334.4953	
N105	BM OM361A ANTENNEN-VERST ANTENNA AMPLIFIER VALVO OM361A	BM 334.5314	
N115	BM OM350R SPEZ. BB.AMPL BROADBAND AMPLIFIER VALVO OM350R SPEZ.	803.0838	
N165	BO LF412CN 2XFET OPAMP OPERATIONAL AMPLIFIER NSC LF412CN	356.0521	
N175	BO TL072ACP 2XFET OPAMP OPERATIONAL AMPLIFIER TEXAS TL072ACP	340.6054	
N185	BO TL072ACP 2XFET OPAMP OPERATIONAL AMPLIFIER TEXAS TL072ACP	340.6054	
N195	BO TL072ACP 2XFET OPAMP OPERATIONAL AMPLIFIER TEXAS TL072ACP	340.6054	
N215	BO MC1595L MULTIPLIER MULTIPLIER MOTOROLA MC1595L	BO 451.4365	
N230	BO CA1558E 2X OPAMP OPERATIONAL AMPLIFIER RCA CA1558E	BO 083.5570	
N240	BO LM308AH PREC. OPAMP OPERATIONAL AMPLIFIER MOTOROLA LM308AH	BO 257.4788	
N250	BO LF411CN JFET OPAMP OPERATIONAL AMPLIFIER NSC LF411CN	349.3058	
N280	BO UA7905UC - 5V1A0 VREGL VOLTAGE REGULATOR FAIRCHILD UA7905UC	BO 282.5449	
P2	VL WIRE-WRAP PIN WIRE-WRAP PIN BERG NR. 75 403-003	VL 088.4542	

uns alle Rechte vor

Kennzeichen Component No.	Benennung/Beschreibung Designation	Sachnummer Stock No.	enthalten in contained in
BIS/TO P18			
R1	RG 42,2 OHM+-2%TK200 1206 CHIP RESISTOR DRALORIC CGB3216 42,2OHM2% TK	RG 006.8790	
R2	RG 42,2 OHM+-2%TK200 1206 CHIP RESISTOR DRALORIC CGB3216 42,2OHM2% TK	RG 006.8790	
R3	RG 42,2 OHM+-2%TK200 1206 CHIP RESISTOR DRALORIC CGB3216 42,2OHM2% TK	RG 006.8790	
R4	RL 0,35W 130 OHM+-1%TK50 RESISTOR DRALORIC SMA0207/130OHM-F-D	RL 082.9888	
R5	RG 56,2 OHM+-1%TK100 1206 CHIP RESISTOR DRALORIC CGB3216 56,2OHM1% TK	RG 006.8826	
R6	RG 21,5 OHM+-2%TK200 1206 CHIP RESISTOR DRALORIC CGB3216 21,5OHM2% TK	RG 006.8726	
R7	RG 56,2 OHM+-1%TK100 1206 CHIP RESISTOR DRALORIC CGB3216 56,2OHM1% TK	RG 006.8826	
R8	RL 0,35W 130 OHM+-1%TK50 RESISTOR DRALORIC SMA0207/130OHM-F-D	RL 082.9888	
R10	RG 100 OHM+-1%TK100 1206 CHIP RESISTOR DRALORIC CGB3216 100OHM1% TK	RG 006.8884	
R11	RG 100 OHM+-1%TK100 1206 CHIP RESISTOR DRALORIC CGB3216 100OHM1% TK	RG 006.8884	
R12	RG 56,2 OHM+-1%TK100 1206 CHIP RESISTOR DRALORIC CGB3216 56,2OHM1% TK	RG 006.8826	
R13	RL 0,35W 432 OHM+-1%TK50 DEPOS.-CARBON RESISTOR DRALORIC SMA0207/432OHM-F-D	RL 083.0355	
R14	RL 0,35W 432 OHM+-1%TK50 DEPOS.-CARBON RESISTOR DRALORIC SMA0207/432OHM-F-D	RL 083.0355	
R35	RL 0,35W 536 OHM+-1%TK50 RESISTOR DRALORIC SMA0207/536OHM-F-D	RL 083.0449	
R36	RL 0,35W 49,9 OHM+-1%TK50 RESISTOR RESISTA MK2	RL 082.9520	
R40	RG 511 OHM+-1%TK100 1206 CHIP RESISTOR DRALORIC CGB3216 511OHM1% TK	RG 006.9051	
R41	RG 511 OHM+-1%TK100 1206 CHIP RESISTOR DRALORIC CGB3216 511OHM1% TK	RG 006.9051	
R43	RG 511 OHM+-1%TK100 1206 CHIP RESISTOR DRALORIC CGB3216 511OHM1% TK	RG 006.9051	

ROHDE&SCHWARZ	Äl	Datum Date	Schaltteilliste für Parts list for	Sachnummer Stock No.	Blatt Page
	06	0487	ED NKL-MESSER ACP METER	803.7832.01 SA	11

Kennzeichen Component No.	Benennung/Beschreibung Designation	Sachnummer Stock No.	enthalten in contained in
R44	RG 511 OHM+-1%TK100 1206 CHIP RESISTOR DRALORIC CGB3216 511OHM1% TK	RG 006.9051	
R50	RG 51,1 OHM+-1%TK100 1206 CHIP RESISTOR DRALORIC CGB3216 51,1 OHM1%	RG 006.8810	
R51	RG 750 OHM+-1%TK100 1206 CHIP RESISTOR DRALORIC CGB3216 750OHM1% TK	RG 006.9097	
R52	RS 0,5W200 OHM+-10%10X10X CERMET POTENTIOMETER T BOURNS 3386F-1-201	RS 087.7554	
R53	RG 750 OHM+-1%TK100 1206 CHIP RESISTOR DRALORIC CGB3216 750OHM1% TK	RG 006.9097	
R54	RG 51,1 OHM+-1%TK100 1206 CHIP RESISTOR DRALORIC CGB3216 51,1 OHM1%	RG 006.8810	
R55	RG 90,9 OHM+-1%TK100 1206 CHIP RESISTOR DRALORIC CGB3216 90,0OHM1% TK	RG 006.8878	
R56	RG 90,9 OHM+-1%TK100 1206 CHIP RESISTOR DRALORIC CGB3216 90,0OHM1% TK	RG 006.8878	
R57	RG 619 OHM+-1%TK100 1206 CHIP RESISTOR DRALORIC CGB3216 619OHM1% TK	RG 006.9074	
R58	RG 619 OHM+-1%TK100 1206 CHIP RESISTOR DRALORIC CGB3216 619OHM1% TK	RG 006.9074	
R59	RG 619 OHM+-1%TK100 1206 CHIP RESISTOR DRALORIC CGB3216 619OHM1% TK	RG 006.9074	
R60	RG 619 OHM+-1%TK100 1206 CHIP RESISTOR DRALORIC CGB3216 619OHM1% TK	RG 006.9074	
R61	RL 0,35W 2,87KOHM+-1%TK50 RESISTOR DRALORIC SMA0207/2,87K-F-D	RL 083.0949	
R62	RL 0,35W 100KOHM+-1%TK50 RESISTOR DRALORIC SMA0207/100K-F-C	RL 082.1764	
R63	RL 0,35W 2,87KOHM+-1%TK50 RESISTOR DRALORIC SMA0207/2,87K-F-D	RL 083.0949	
R64	RL 0,35W 316 OHM+-1%TK50 RESISTOR DRALORIC SMA0207/316OHM-F-D	RL 083.0232	
R67	RL 0,35W 75,0 OHM+-1%TK50 RESISTOR DRALORIC SMA0207/75OHM-F-D	RL 082.9665	
R68	RL 0,35W 75,0 OHM+-1%TK50 RESISTOR DRALORIC SMA0207/75OHM-F-D	RL 082.9665	
R75	RL 0,35W 1KOHM+-1%TK50 RESISTOR DRALORIC SMA0207/1K-F-C	RL 082.2160	

Für diese Unterlage behalten wir uns alle Rechte vor

Kennzeichen Component No.	Benennung/Beschreibung Designation	Sachnummer Stock No.	enthalten in contained in
R76	RL 0,35W 2,67KOHM+-1%TK50 RESISTOR DRALORIC SMA0207/2,67K-F-D	RL 083.0910	
R77	RL 0,35W 1KOHM+-1%TK50 RESISTOR DRALORIC SMA0207/1K-F-C	RL 082.2160	
R78	RS 0,5W500 OHM+-10%10X10X CERMET POTENTIOMETER T BOURNS 3386F-1-501	RS 247.7878	
R79	RL 0,35W 56,2 OHM+-1%TK50 RESISTOR DRALORIC SMA0207/56,2OHM-F-D	RL 082.9571	
R80	RL 0,35W 562 OHM+-1%TK50 RESISTOR DRALORIC SMA0207/562OHM-F-D	RL 083.0461	
R90	RG 42,2 OHM+-2%TK200 1206 CHIP RESISTOR DRALORIC CGB3216 42,2OHM2% TK	RG 006.8790	
R91	RG 46,4 OHM+-2%TK200 1206 CHIP RESISTOR DRALORIC CGB3216 46,4OHM2% TK	RG 006.8803	
R92	RG 42,2 OHM+-2%TK200 1206 CHIP RESISTOR DRALORIC CGB3216 42,2OHM2% TK	RG 006.8790	
R93	RL 0,35W 130 OHM+-1%TK50 RESISTOR DRALORIC SMA0207/130OHM-F-D	RL 082.9888	
R100	RG 162 OHM+-1%TK100 1206 CHIP RESISTOR DRALORIC CGB3216 162OHM1% TK	RG 006.8932	
R101	RG 90,9 OHM+-1%TK100 1206 CHIP RESISTOR DRALORIC CGB3216 90,0OHM1% TK	RG 006.8878	
R102	RG 162 OHM+-1%TK100 1206 CHIP RESISTOR DRALORIC CGB3216 162OHM1% TK	RG 006.8932	
R103	RL 0,35W 127 OHM+-1%TK50 RESISTOR DRALORIC SMA0207/127OHM-F-D	RL 082.9871	
R105	RL 0,35W 130 OHM+-1%TK50 RESISTOR DRALORIC SMA0207/130OHM-F-D	RL 082.9888	
R110	RG 100 OHM+-1%TK100 1206 CHIP RESISTOR DRALORIC CGB3216 100OHM1% TK	RG 006.8884	
R111	RG 61,9 OHM+-1%TK100 1206 CHIP RESISTOR DRALORIC CGB3216 61,9OHM1% TK	RG 006.8832	
R112	RG 100 OHM+-1%TK100 1206 CHIP RESISTOR DRALORIC CGB3216 100OHM1% TK	RG 006.8884	
R115	RL 0,35W 130 OHM+-1%TK50 RESISTOR DRALORIC SMA0207/130OHM-F-D	RL 082.9888	
R125	RL 0,35W 10,0KOHM+-1%TK50 RESISTOR DRALORIC SMA0207/10K-F-D	RL 083.1297	

ROHDE&SCHWARZ	Äl	Datum Date	Schaltteilliste für Parts list for	Sachnummer Stock No.	Blatt Page
	06	0487	ED NKL-MESSER ACP METER	803.7832.01 SA	13

Kennzeichen Component No.	Benennung/Beschreibung Designation	Sachnummer Stock No.	enthalten in contained in
R130	RL 0,35W 10,0KOHM+-1%TK50 RESISTOR DRALORIC SMA0207/10K-F-D	RL 083.1297	
R135	RL 0,35W 4,75KOHM+-1%TK50 RESISTOR DRALORIC SMA0207/4,75K-F-D	RL 083.1097	
R155	RL 0,35W 499 OHM+-1%TK50 RESISTOR DRALORIC SMA0207/499OHM-F-D	RL 083.0410	
R156	RL 0,35W 169 KOHM+-1%TK50 RESISTOR DRALORIC SMA/207/169K-F-C	RL 083.2164	
R157	RL 0,35W 100KOHM+-1%TK50 RESISTOR DRALORIC SMA0207/100K-F-C	RL 082.1764	
R158	RL 0,35W 2,74KOHM+-1%TK50 RESISTOR DRALORIC SMA0207/2,74K-F-D	RL 083.0926	
R159	RL 0,35W 402 OHM+-1%TK50 RESISTOR DRALORIC SMA0207/402OHM-F-D	RL 083.0326	
R160	RL 0,35W 1,87KOHM+-1%TK50 RESISTOR DRALORIC SMA0207/1,87K-F-D	RL 083.0790	
R161	RL 0,35W 2,00KOHM+-1%TK50 RESISTOR DRALORIC SMA0207/2,00K-F-D	RL 083.0826	
R165	RL 0,35W 215 OHM+-1%TK50 RESISTOR DRALORIC SMA0207/215OHM-F-D	RL 083.0078	
R166	RL.0,35W 100 OHM+-1%TK50 METALFILM-RESISTOR DRALORIC SMA0207/100/HM-F-D	RL 082.6543	
R170	RL 0,35W 2,15KOHM+-1%TK50 RESISTOR DRALORIC SMA0207/2,15K-F-D	RL 083.0855	
R171	RL 0,35W 1KOHM+-1%TK50 RESISTOR DRALORIC SMA0207/1K-F-C	RL 082.2160	
R175	RL 0,35W 2,26KOHM+-1%TK50 RESISTOR DRALORIC SMA0207/2,26K-F-D	RL 083.0861	
R176	RL 0,35W 1KOHM+-1%TK50 RESISTOR DRALORIC SMA0207/1K-F-C	RL 082.2160	
R180	RL 0,35W 2,26KOHM+-1%TK50 RESISTOR DRALORIC SMA0207/2,26K-F-D	RL 083.0861	
R181	RL 0,35W 1KOHM+-1%TK50 RESISTOR DRALORIC SMA0207/1K-F-C	RL 082.2160	
R185	RL 0,35W 2,26KOHM+-1%TK50 RESISTOR DRALORIC SMA0207/2,26K-F-D	RL 083.0861	
R186	RL 0,35W 1KOHM+-1%TK50 RESISTOR DRALORIC SMA0207/1K-F-C	RL 082.2160	

Für diese Unterlage behalten wir uns allr hte vor

Kennzeichen Component No.	Benennung/Beschreibung Designation	Sachnummer Stock No.	enthalten in contained in
R190	RL 0,35W 2,26KOHM+-1%TK50 RESISTOR DRALORIC SMA0207/2,26K-F-D	RL 083.0861	
R191	RL 0,35W 1KOHM+-1%TK50 RESISTOR DRALORIC SMA0207/1K-F-C	RL 082.2160	
R195	RL 0,35W 2,26KOHM+-1%TK50 RESISTOR DRALORIC SMA0207/2,26K-F-D	RL 083.0861	
R196	RL 0,35W 1KOHM+-1%TK50 RESISTOR DRALORIC SMA0207/1K-F-C	RL 082.2160	
R200	RL 0,35W 2,26KOHM+-1%TK50 RESISTOR DRALORIC SMA0207/2,26K-F-D	RL 083.0861	
R201	RL 0,35W 1KOHM+-1%TK50 RESISTOR DRALORIC SMA0207/1K-F-C	RL 082.2160	
R210	RL 0,35W 499 OHM+-1%TK50 RESISTOR DRALORIC SMA0207/499OHM-F-D	RL 083.0410	
R211	RL 0,35W 499 OHM+-1%TK50 RESISTOR DRALORIC SMA0207/499OHM-F-D	RL 083.0410	
R215	RL 0,35W 1KOHM+-1%TK50 RESISTOR DRALORIC SMA0207/1K-F-C	RL 082.2160	
R216	RL 0,35W 1KOHM+-1%TK50 RESISTOR DRALORIC SMA0207/1K-F-C	RL 082.2160	
R217	RL 0,35W 10,7KOHM+-1%TK50 RESISTOR DRALORIC SMA0207/10,7K-F-D	RL 083.1316	
R218	RL 0,35W 10,7KOHM+-1%TK50 RESISTOR DRALORIC SMA0207/10,7K-F-D	RL 083.1316	
R219	RL 0,35W 10,0 OHM+-1%TK50 RESISTOR DRALORIC SMA0207/10OHM-F-D	RL 082.8852	
R220	RL 0,35W 3,65KOHM+-1%TK50 RESISTOR DRALORIC SMA0207/3,65K-F-C	RL 082.2260	
R221	RL 0,35W 4,02KOHM+-1%TK50 RESISTOR DRALORIC SMA0207/4,02K-F-D	RL 083.1045	
R222	RS 0,5W100 OHM+-10%10X10X CERMET POTENTIOMETER BOURNS 3386X-1-101	RS 247.7932	
R223	RL 0,35W 4,02KOHM+-1%TK50 RESISTOR DRALORIC SMA0207/4,02K-F-D	RL 083.1045	
R230	RL 0,35W 12,1KOHM+-1%TK50 RESISTOR DRALORIC SMA0207/12,1K-F-D	RL 083.1351	
R231	RL 0,35W 10,0KOHM+-1%TK50 RESISTOR DRALORIC SMA0207/10K-F-D	RL 083.1297	

ROHDE&SCHWARZ	Äl	Datum Date	Schaltteilliste für Parts list for	Sachnummer Stock No.	Blatt Page
	06	0487	ED NKL-MESSER ACP METER	803.7832.01 SA	15

Kennzeichen Component No.	Benennung/Beschreibung Designation	Sachnummer Stock No.	enthalten in contained in
R232	RL 0,35W 2,00KOHM+-1%TK50 RESISTOR DRALORIC SMA0207/2,00K-F-D	RL 083.0826	
R233	RL 0,35W 10,0KOHM+-1%TK50 RESISTOR DRALORIC SMA0207/10K-F-D	RL 083.1297	
R234	RL 0,35W 21,0KOHM+-1%TK50 RESISTOR DRALORIC SMA/207/21,0K-F-C	RL 083.1539	
R235	RL 0,35W 10,0KOHM+-1%TK50 RESISTOR DRALORIC SMA0207/10K-F-D	RL 083.1297	
R240	RL 0,35W 40,2KOHM+-1%TK50 RESISTOR DRALORIC SMA/207/40,2K-F-C	RL 083.1751	
R241	RL 0,35W 40,2KOHM+-1%TK50 RESISTOR DRALORIC SMA/207/40,2K-F-C	RL 083.1751	
R242	RL 0,35W 100KOHM+-1%TK50 RESISTOR DRALORIC SMA0207/100K-F-C	RL 082.1764	
R243	RL 0,35W 100KOHM+-1%TK50 RESISTOR DRALORIC SMA0207/100K-F-C	RL 082.1764	
R244	RL 0,35W 200KOHM+-1%TK50 RESISTOR DRALORIC SMA0207/200K-F-D	RL 083.2235	
R250	RL 0,35W 200KOHM+-1%TK50 RESISTOR DRALORIC SMA0207/200K-F-D	RL 083.2235	
R251	RL 0,35W 200KOHM+-1%TK50 RESISTOR DRALORIC SMA0207/200K-F-D	RL 083.2235	
R252	RL 0,35W 200KOHM+-1%TK50 RESISTOR DRALORIC SMA0207/200K-F-D	RL 083.2235	
R255	RL 0,35W 10,0 OHM+-1%TK50 RESISTOR DRALORIC SMA0207/10OHM-F-D	RL 082.8852	
R260	RL 0,35W 10,0 OHM+-1%TK50 RESISTOR DRALORIC SMA0207/10OHM-F-D	RL 082.8852	
R265	RL 0,35W 499 OHM+-1%TK50 RESISTOR DRALORIC SMA0207/499OHM-F-D	RL 083.0410	
R270	RL 0,35W 10,0 OHM+-1%TK50 RESISTOR DRALORIC SMA0207/10OHM-F-D	RL 082.8852	
R271	RL 0,35W 499 OHM+-1%TK50 RESISTOR DRALORIC SMA0207/499OHM-F-D	RL 083.0410	
R272	RL 0,35W 10,0KOHM+-1%TK50 RESISTOR DRALORIC SMA0207/10K-F-D	RL 083.1297	
V55	AK BCY79IX PNP 45V 200MA TRANSISTOR SIEMENS BCY79IX	AK 010.3777	

Für diese Unterlage behalten wir uns alle Rechte vor

Kennzeichen Component No.	Benennung/Beschreibung Designation	Sachnummer Stock No.	enthalten in contained in
V56	AK BCY79IX PNP 45V 200MA TRANSISTOR SIEMENS BCY79IX	AK 010.3777	
V66	AE BB405B 11/ 2PF CDI TUNING DIODE VALVO BB405B	AE 596.6839	
V70	AK BFR96 NPN 15V 75MA TRANSISTOR VALVO BFR96	AK 093.2738	
V75	AK BCY59IX NPN 45V 200MA TRANSISTOR SIEMENS BCY59IX	AK 010.5163	
V125	AE BZX79/C20 0,5W Z-DI ZENER DIODE VALVO BZX79/C20	AE 012.2584	
V126	AK BC337-40 NPN 45V 800MA TRANSISTOR INTERMETAL BC337-40	303.9524	
V127	AD 1N4448 75V 0,15A UDI DIODE TEXAS INST 1N4448 GEGURTET	AD 012.0700	
V130	AE BZX79/C20 0,5W Z-DI ZENER DIODE VALVO BZX79/C20	AE 012.2584	
V131	AK BC337-40 NPN 45V 800MA TRANSISTOR INTERMETAL BC337-40	303.9524	
V132	AD 1N4448 75V 0,15A UDI DIODE TEXAS INST 1N4448 GEGURTET	AD 012.0700	
V135	AE BZX79/C20 0,5W Z-DI ZENER DIODE VALVO BZX79/C20	AE 012.2584	
V136	AK BC337-40 NPN 45V 800MA TRANSISTOR INTERMETAL BC337-40	303.9524	
V137	AD BAY71 35V 0,12A UDI DIODE THOMSON BAY71	012.0575	
V138	AD FD700 20V 0,05A UDI DIODE FAIRCHILD FD700	AD 012.0500	
V155	AK BCY59IX NPN 45V 200MA TRANSISTOR SIEMENS BCY59IX	AK 010.5163	
V206	AD BAY71 35V 0,12A UDI DIODE THOMSON BAY71	012.0575	
V270	AE BZX79/C9V1 0,5W Z-DI ZENER DIODE VALVO BZX79/C9V1	AE 012.2503	
W1	DX KABEL W1 CABLE	803.8097	
X1	FP STECKERL.INDIR.64POLIG 64-PIN INSERT PANDUIT 100-064-033/999	FP 084.6470	

Kennzeichen Component No.	Benennung/Beschreibung Designation	Sachnummer Stock No.	enthalten in contained in
X911	FJ EINBAUSTECKER SYST.SMB ANGLE CONNECTOR ROSENBERG R&S-ZCHNG.602.8804	FJ 602.8804	
X916	FJ EINBAUSTECKER SYST.SMB ANGLE CONNECTOR ROSENBERG R&S-ZCHNG.602.8804	FJ 602.8804	
X917	FJ EINBAUSTECKER SYST.SMB ANGLE CONNECTOR ROSENBERG R&S-ZCHNG.602.8804	FJ 602.8804	
X918	FJ EINBAUSTECKER SYST.SMB ANGLE CONNECTOR ROSENBERG R&S-ZCHNG.602.8804	FJ 602.8804	
Z1	LD 10GHZ 50DB100V10A4RDX9 LEAD THROUGH FILTER ERIE R&S-ZCHNG.451.4636	LD 451.4636	
Z20	LD 10GHZ 50DB100V10A4RDX9 LEAD THROUGH FILTER ERIE R&S-ZCHNG.451.4636	LD 451.4636	
Z21	LD 10GHZ 50DB100V10A4RDX9 LEAD THROUGH FILTER ERIE R&S-ZCHNG.451.4636	LD 451.4636	
Z50	LD 10GHZ 50DB100V10A4RDX9 LEAD THROUGH FILTER ERIE R&S-ZCHNG.451.4636	LD 451.4636	
Z60	LD 10GHZ 50DB100V10A4RDX9 LEAD THROUGH FILTER ERIE R&S-ZCHNG.451.4636	LD 451.4636	
Z80	LD 10GHZ 50DB100V10A4RDX9 LEAD THROUGH FILTER ERIE R&S-ZCHNG.451.4636	LD 451.4636	
Z115	LD 10GHZ 50DB100V10A4RDX9 LEAD THROUGH FILTER ERIE R&S-ZCHNG.451.4636	LD 451.4636	
Z125	LD 10GHZ 50DB100V10A4RDX9 LEAD THROUGH FILTER ERIE R&S-ZCHNG.451.4636	LD 451.4636	
Z130	LD 10GHZ 50DB100V10A4RDX9 LEAD THROUGH FILTER ERIE R&S-ZCHNG.451.4636	LD 451.4636	
			- ENDE -

Für diese Unterlage behalten wir uns allr te vor

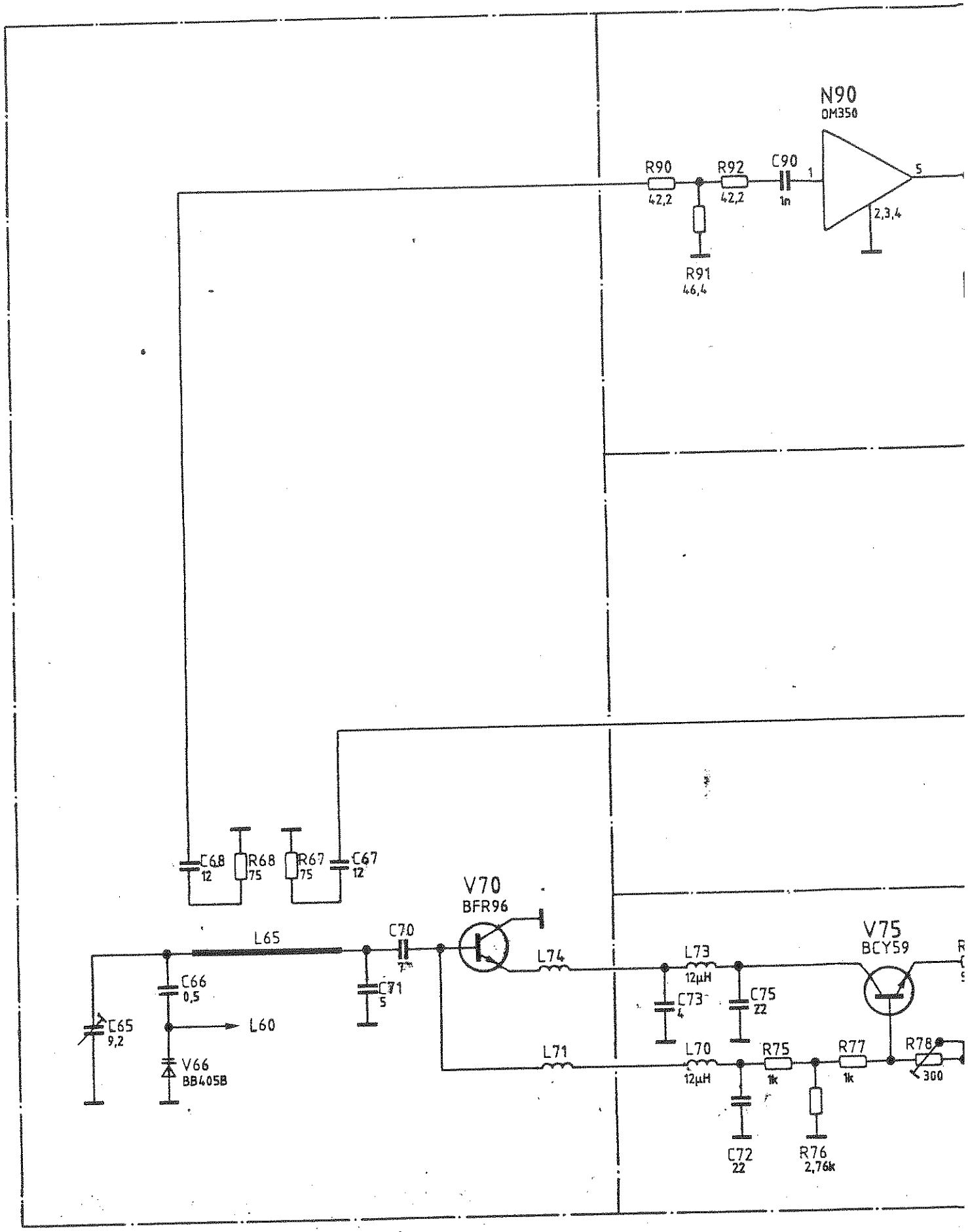
N90
OM350
R90
42,2
R92
42,2
C90
1n
1
5
2,3,4
R91
46,4
C68
12
R68
75
R67
75
C67
12
V70
BFR96
L65
C70
7
C71
5
C66
0,5
C65
9,2
L60
V66
BB405B
L74
L73
12µH
C73
4
C75
22
V75
BCY59
L71
L70
12µH
R75
1k
R77
1k
R78
300
C72
22
R76
2,76k

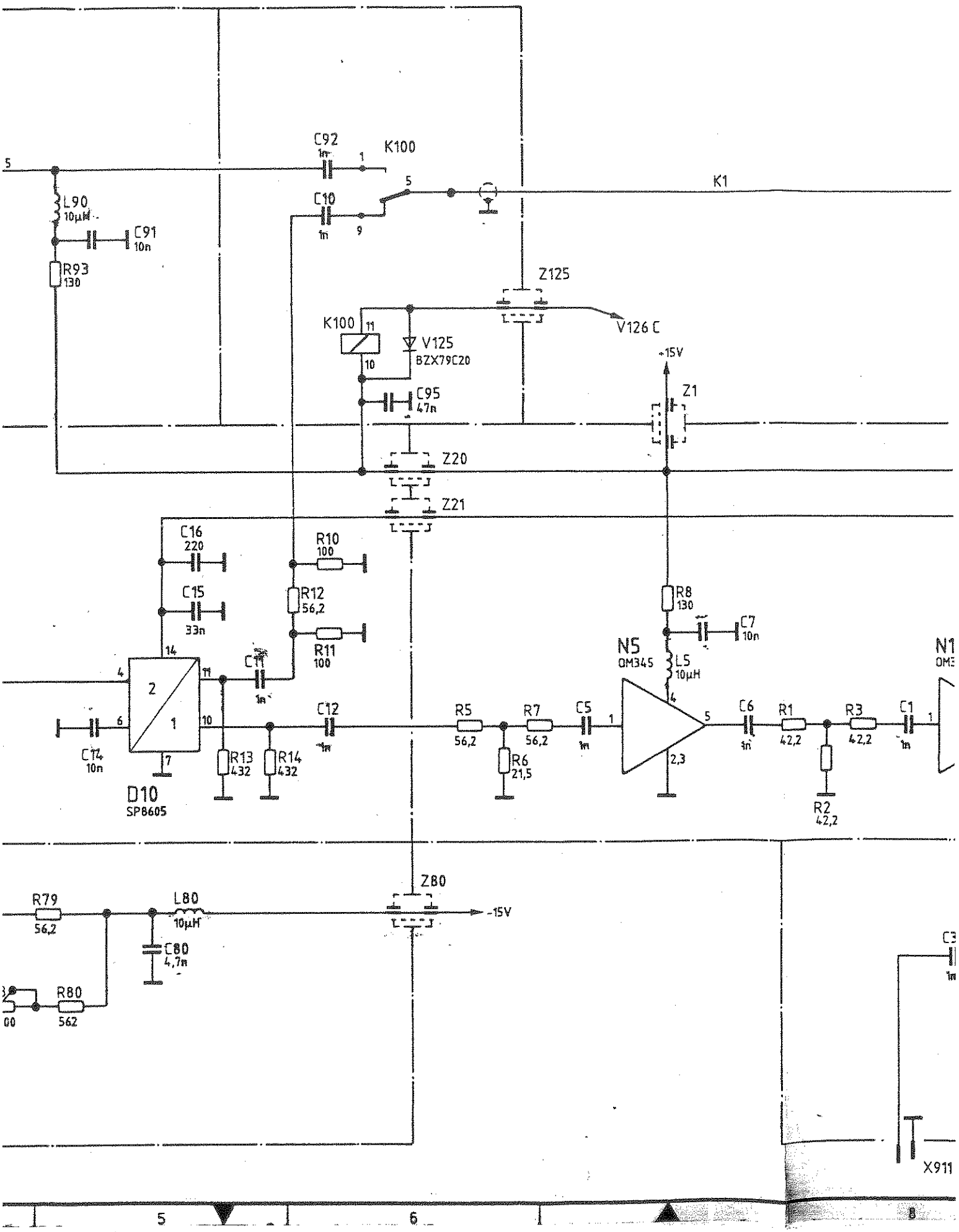
C92
1n
K100
5
1
K1
L90
10µH
C91
10n
R93
130
C10
1n
9
Z125
K100
11
V125
BZX79C20
10
V126 C
+15V
C95
47n
Z1
Z20
Z21
C16
220
R10
100
C15
33n
R12
56,2
R11
100
R8
130
C7
10n
N5
OM345
L5
10µH
N1
OM3
14
4
2
1
11
10
6
7
C11
1n
C12
1n
R5
56,2
R7
56,2
C5
1n
1
5
C6
1n
R1
42,2
R3
42,2
C1
1n
1
C14
10n
R13
432
R14
432
R6
21,5
2,3
R2
42,2
D10
SP8605
R79
56,2
L80
10µH
Z80
-15V
C80
4,7n
R80
562
C3
1n
X911
5
6
8

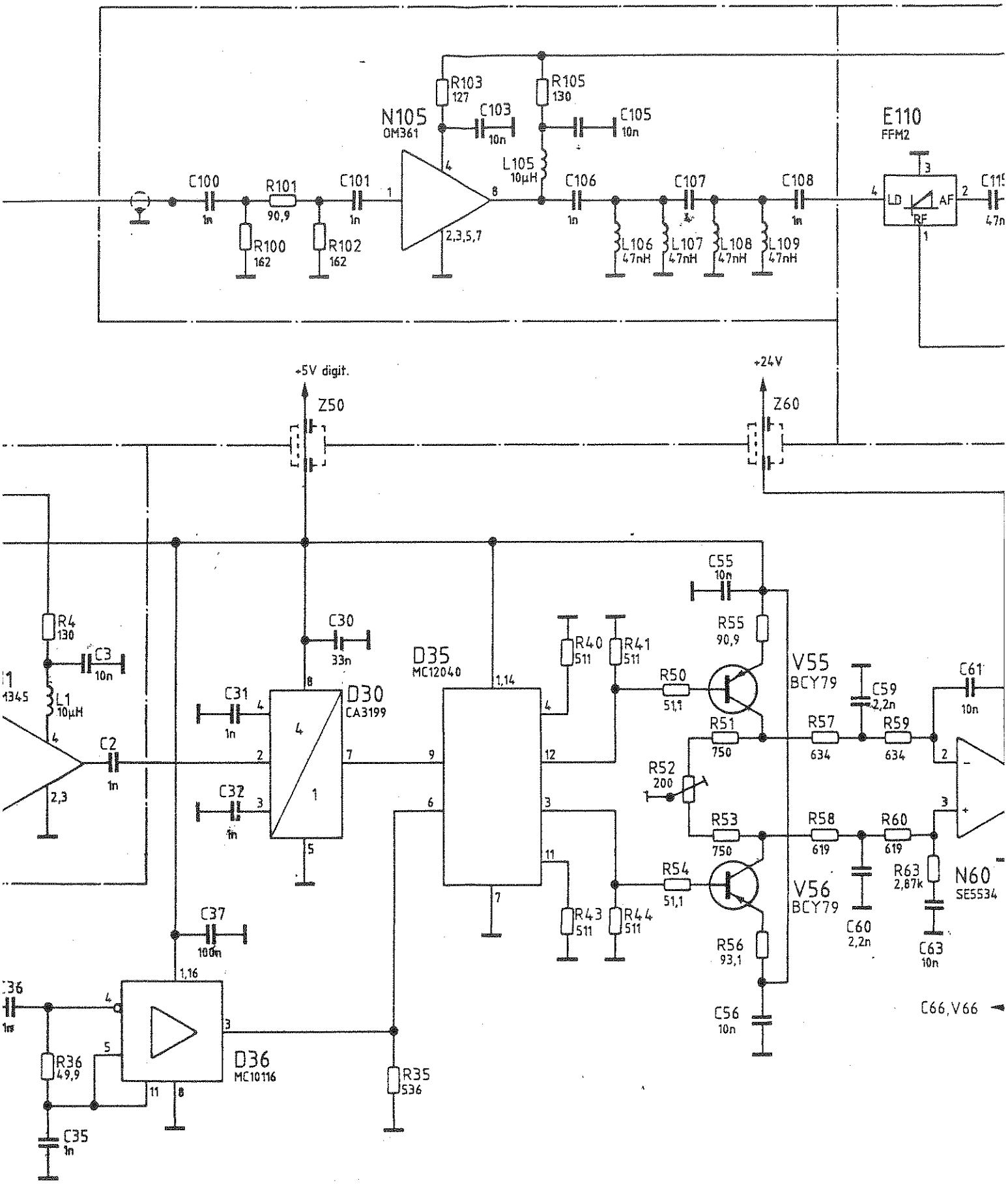
N105
OM361
R103
127
R105
130
C103
10n
C105
10n
L105
10µH
C100
1n
R101
90,9
C101
1n
R100
162
R102
162
C106
1n
C107
1n
C108
1n
L106
47nH
L107
47nH
L108
47nH
L109
47nH
E110
FFM2
LD
AF
RF
+5V digit.
Z50
+24V
Z60
R4
130
C3
10n
L1
10µH
C2
1n
C30
33n
C31
1n
C32
1n
D30
CA3199
D35
MC12040
R40
511
R41
511
R43
511
R44
511
C55
10n
R55
90,9
R50
51,1
R51
750
R52
200
R53
750
R54
51,1
R56
93,1
C56
10n
V55
BCY79
V56
BCY79
C59
2,2n
C60
2,2n
R57
634
R59
634
R58
619
R60
619
C61
10n
R63
2,87k
C63
10n
N60
SE5534
C66,V66
C37
100n
C36
1n
R36
49,9
C35
1n
D36
MC10116
R35
536

1

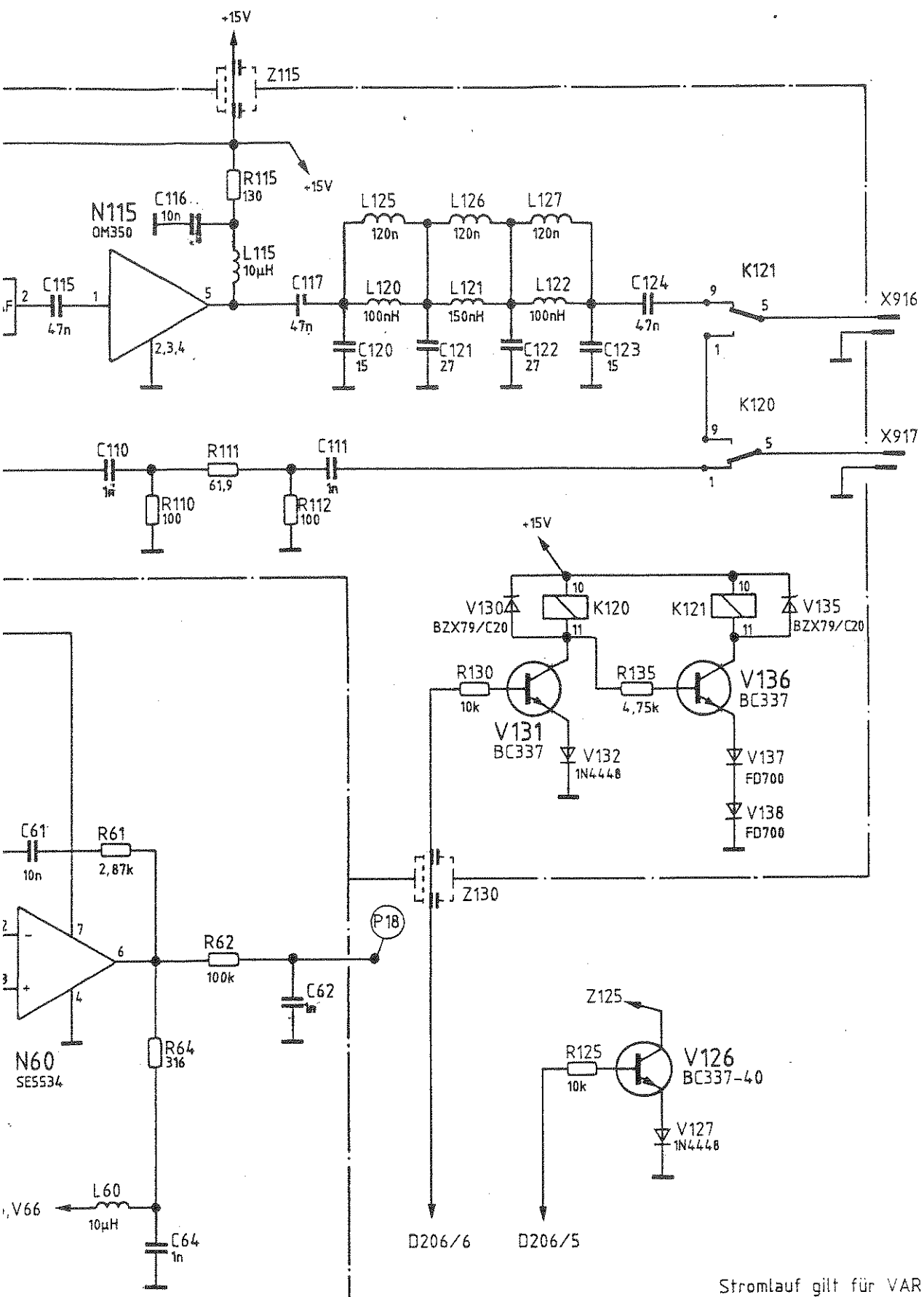

Stromlauf gilt für VAR 02
Circuit diagram is valid for model 02

Stromlauf zu	NK-Leistungsmesser Adjacent-channel power meter	Zeichn.-Nr.	803.7832 S
CMT-B6	reg. i. V. 803.7810 V	erste Z. 803.7810	Blat

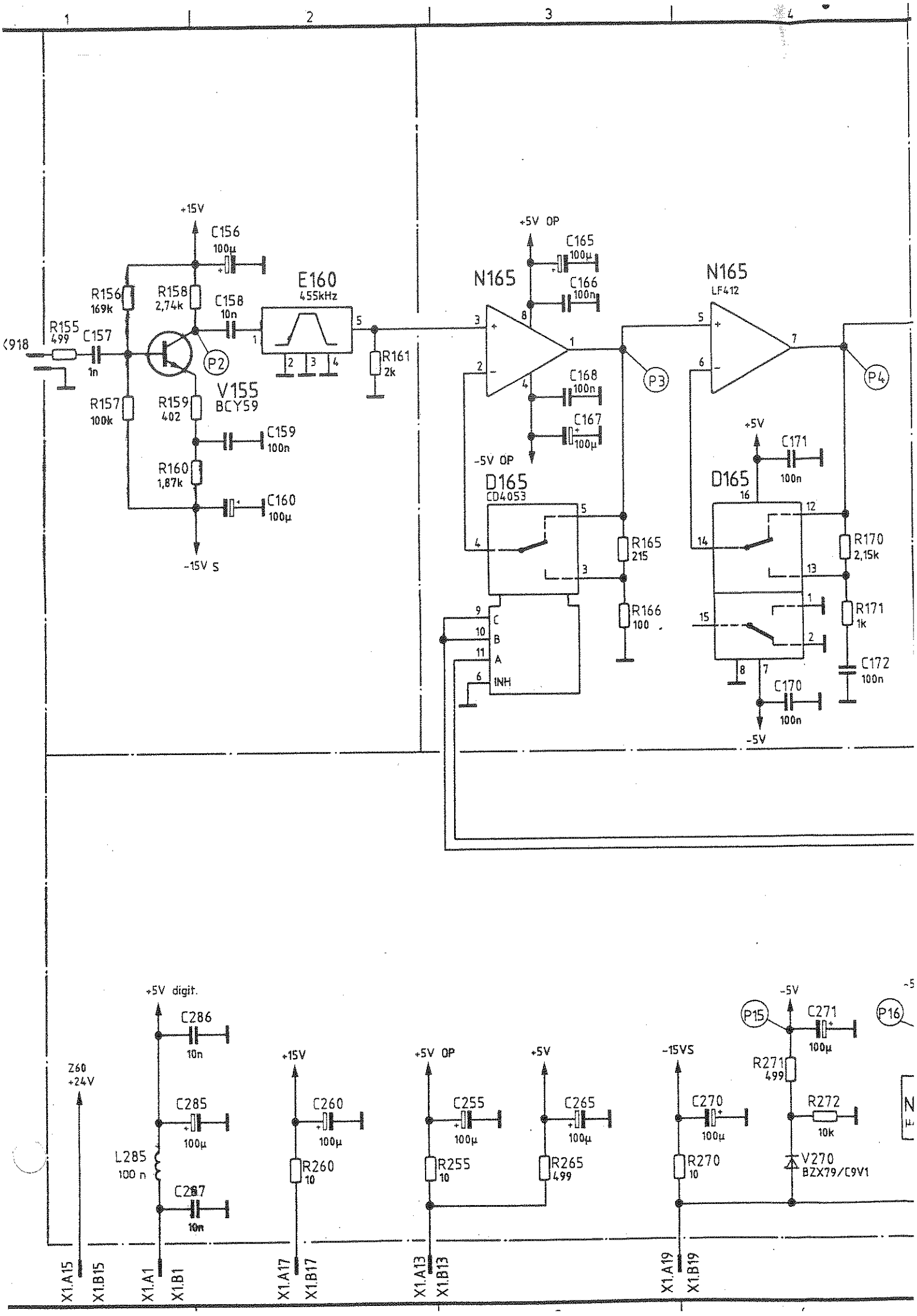
1
2
3
4
+15V
C156
100µ
R156
169k
R158
2,74k
C158
10n
E160
455kHz
R155
499
C157
1n
V155
BCY59
P2
R157
100k
R159
402
C159
100n
R160
1,87k
C160
100µ
-15V S
R161
2k
+5V OP
C165
100µ
C166
100n
N165
C168
100n
C167
100µ
-5V OP
D165
CD4053
R165
215
R166
100
INH
N165
LF412
P3
P4
+5V
C171
100n
D165
R170
2,15k
R171
1k
C172
100n
C170
100n
-5V
+5V digit.
C286
10n
C285
100µ
L285
100 n
C287
10n
Z60
+24V
+15V
C260
100µ
R260
10
+5V OP
C255
100µ
R255
10
+5V
C265
100µ
R265
499
-15VS
C270
100µ
R270
10
-5V
P15
C271
100µ
R271
499
R272
10k
V270
BZX79/C9V1
P16
X1.A15
X1.B15
X1.A1
X1.B1
X1.A17
X1.B17
X1.A13
X1.B13
X1.A19
X1.B19

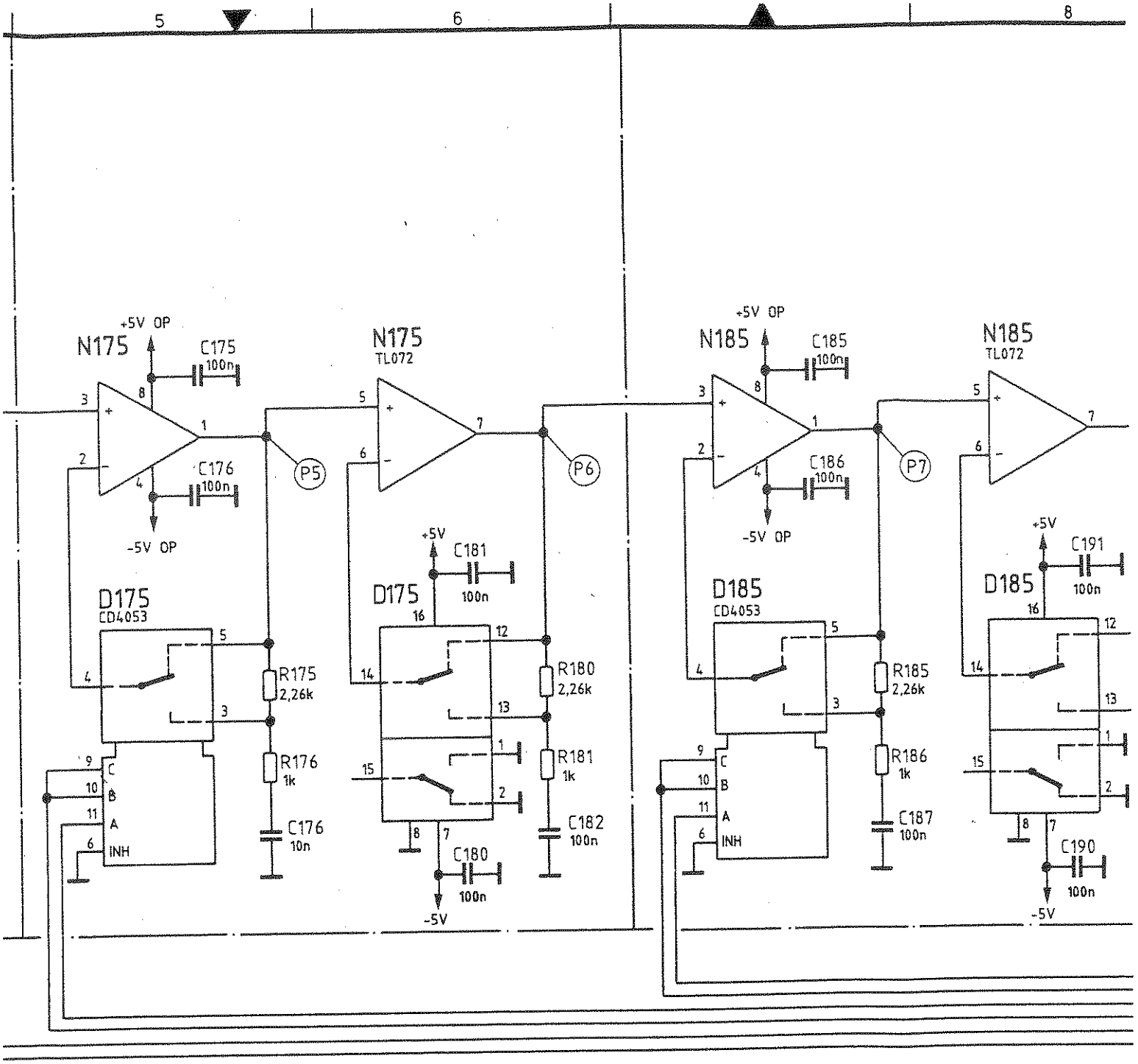
5
6
8
N175
+5V OP
C175
100n
C176
100n
-5V OP
P5
N175
TL072
P6
D175
CD4053
R175
2,26k
R176
1k
C176
10n
+5V
C181
100n
D175
R180
2,26k
R181
1k
C182
100n
C180
100n
-5V
N185
+5V OP
C185
100n
C186
100n
-5V OP
P7
N185
TL072
D185
CD4053
R185
2,26k
R186
1k
C187
100n
+5V
C191
100n
D185
C190
100n
-5V
C
B
A
INH

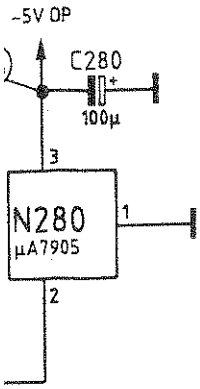
-5V OP
C280
100µ
N280
µA7905

X1A8

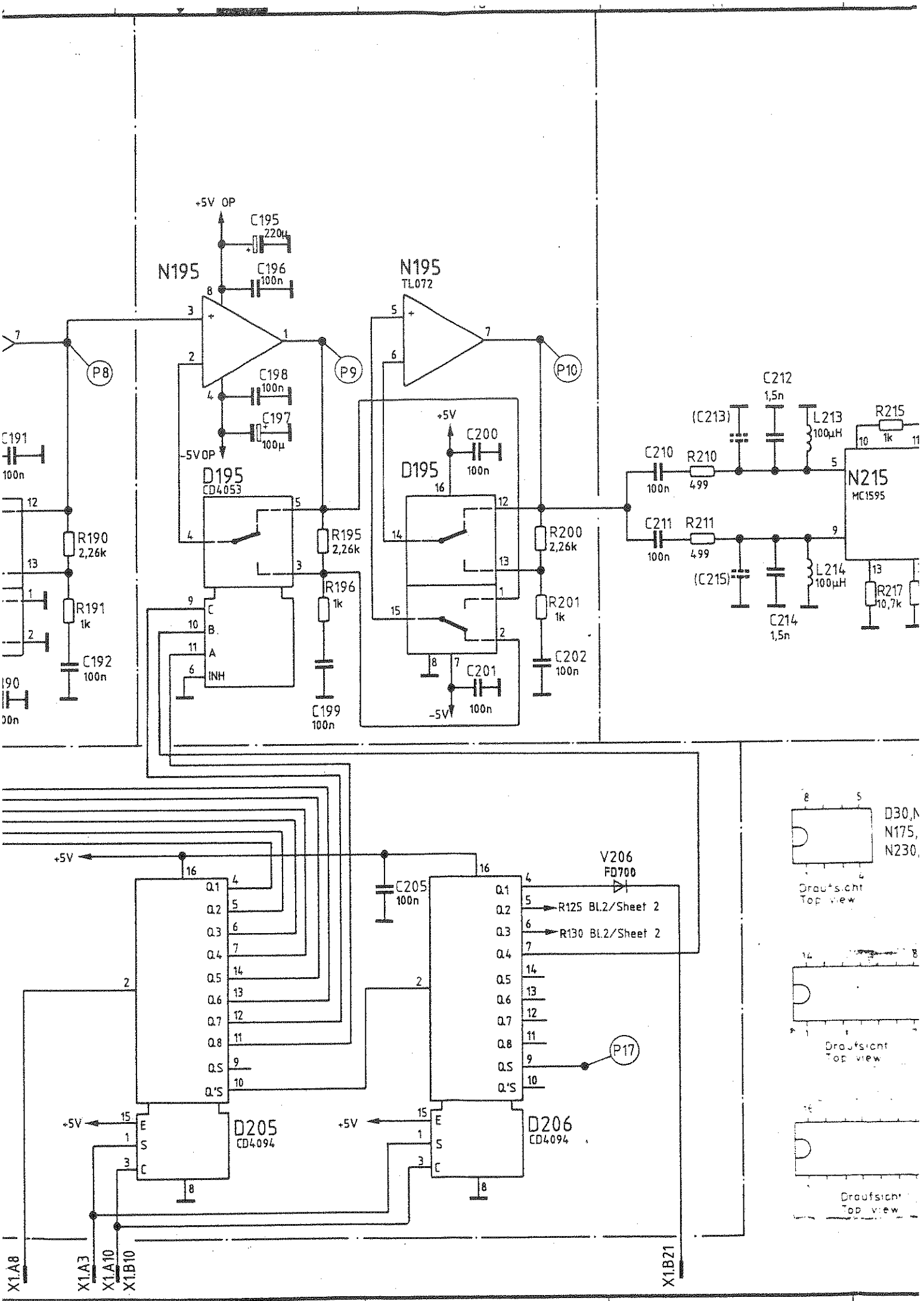

Klebekante für Druckerzeugnis - durch diese Zone möglichst nur Leitungen führen.

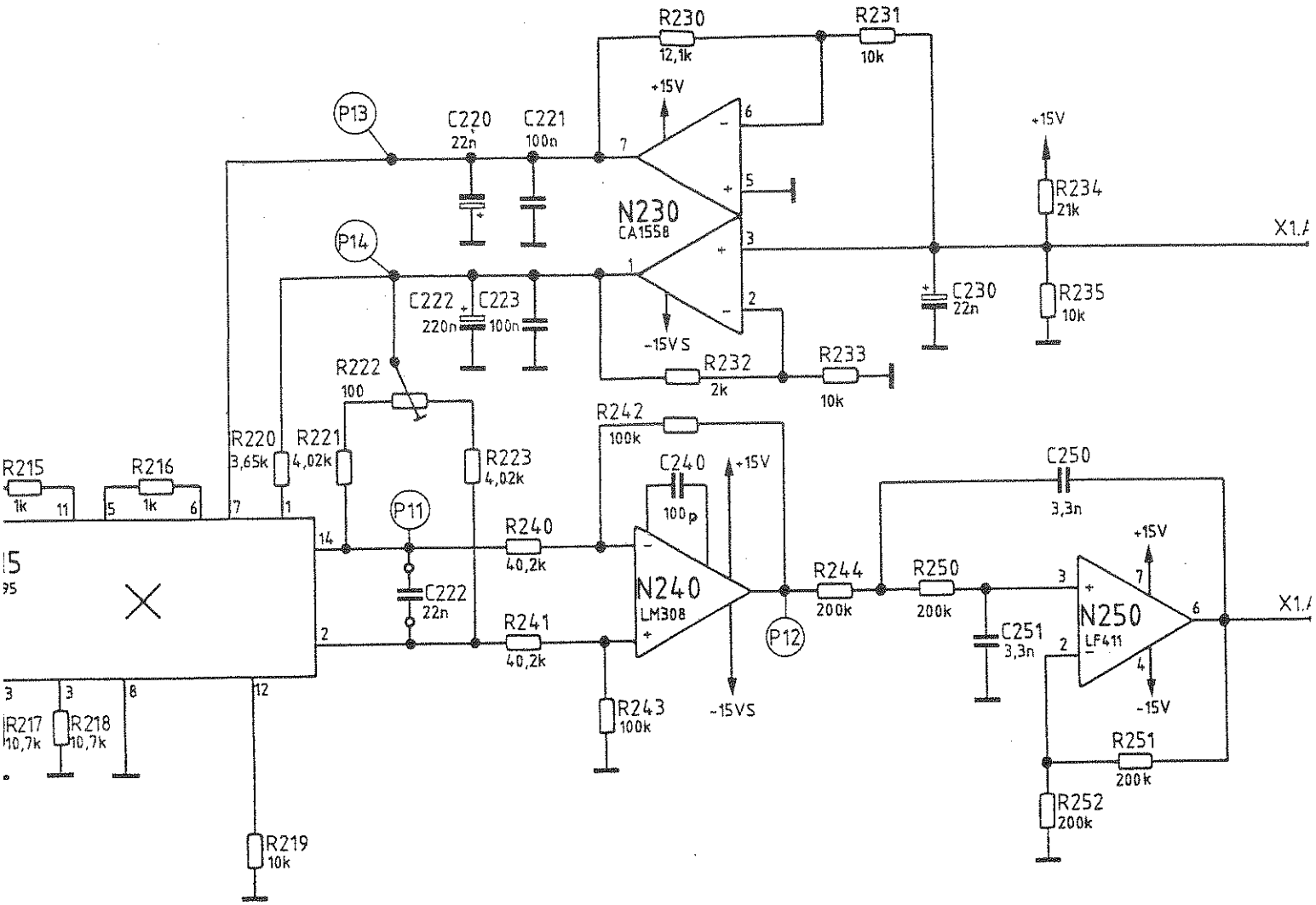

D30,N60,N165
N175,N185,N195
N230,N240,N280

N1,N5,N20
N90,N115

V126,V131
V136

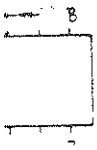

D10,D35,N215
D165,D175,D185
D195,D205,D206

N105

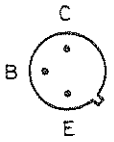

V55,V56
V75,V155

D36

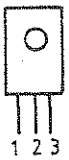

N280

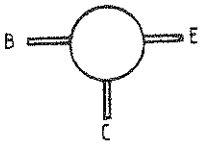

V70

Stromlauf zu	NK-Leistungsmesser Adjacent-channel power meter	Z	Zeichn.-Nr. 803.7832 S
CMT-B6	reg. i. V. 803.7810 V	erste Z. 803.7810	

Ansicht und Leitungsf
View of tracks on com

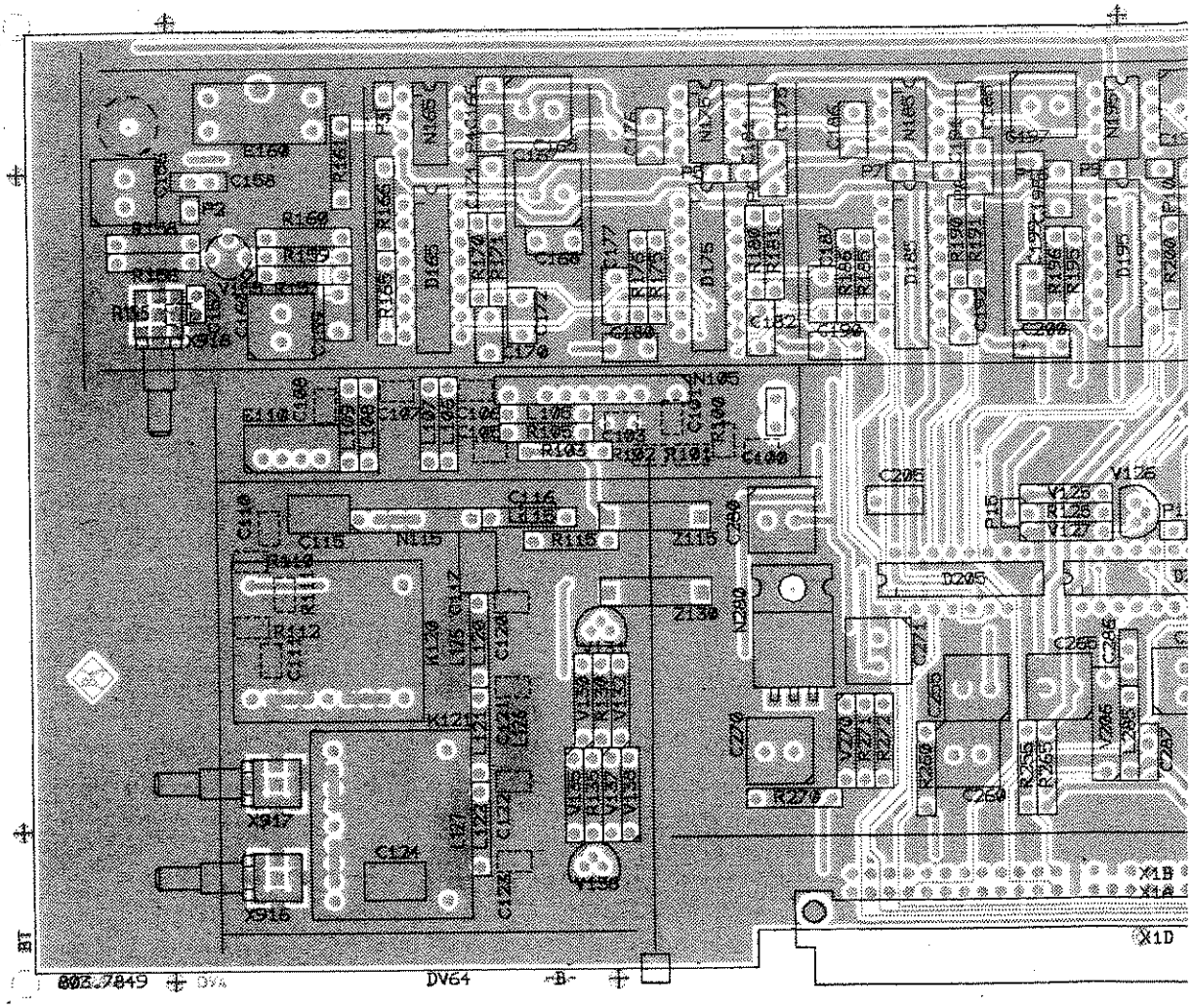

(hierzu HVC 250)

ACHTUNG: EGB!
Elektrostatisch gefährdete Bauelemente erfordern eine besondere Handhabung.

ATTENTION ESD!
Electrostatic sensitive devices require a special handling.

ngsführung Bauteilseite
component side

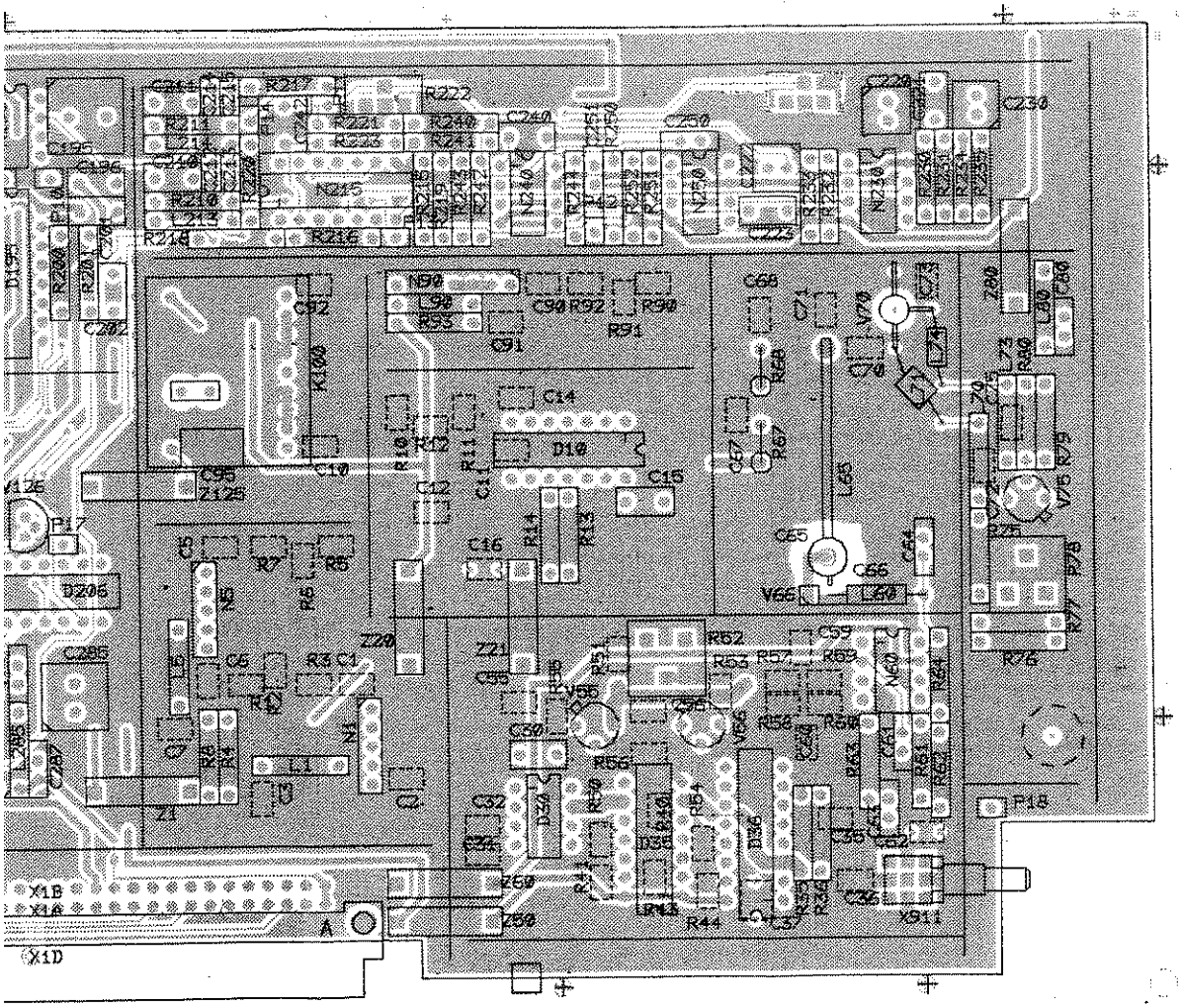

B	32914	12.85	BT	Maße ohne Toleranzangabe		Maßstab 1 : 1	
D	35531	11.86	BT			Halbzeug, Werkstoff	
E	35553	4.87	PR				
F	35553	4.87	PR				
H	38956	9.87	IB	1KSA	Tag	Name	Benennung
				Bearb.	12.85	BT	NK - Leistungsmesser Adjacent-channel power meter
				Gepr.			Z
				Norm			
Änd. Zust.	Änderungs-Mitteilung	Tag	Name	ROHDE&SCHWARZ		Zeichn.-Nr. 803.7832	Blatt-Nr. 2 v. Bl.
				zu Gerät CMT-B6		reg. i. V. 803.7810 V	erste Z.

Ansicht und Leitungs
View of tracks on sol

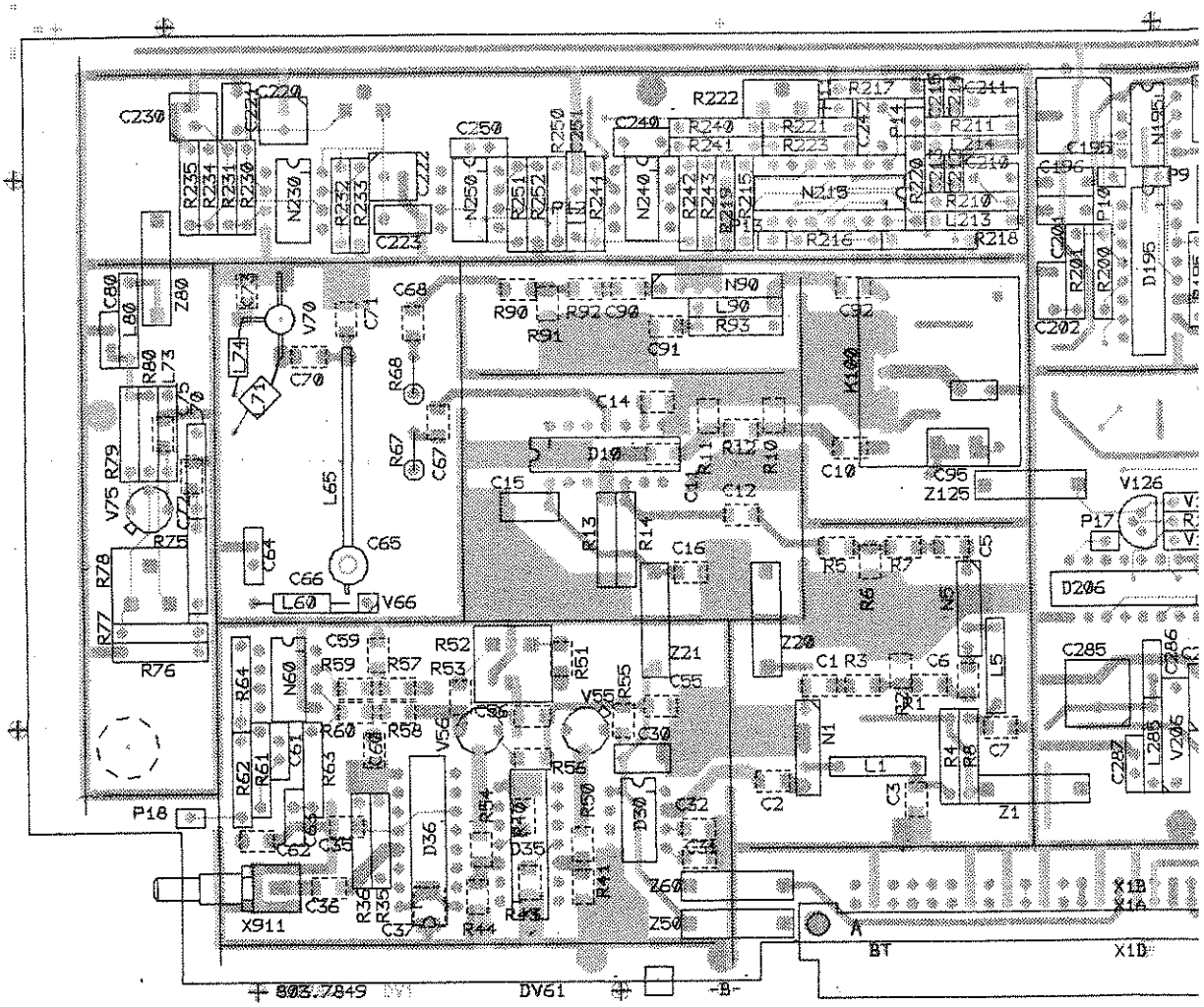

(hierzu HVC 250)

ACHTUNG: EGB!
Elektrostatisch gefährdete Bauelemente erfordern eine besondere Handhabung

ATTENTION ESD!
Electrostatic sensitive devices require a special handling

gsführung Lötseite
older side

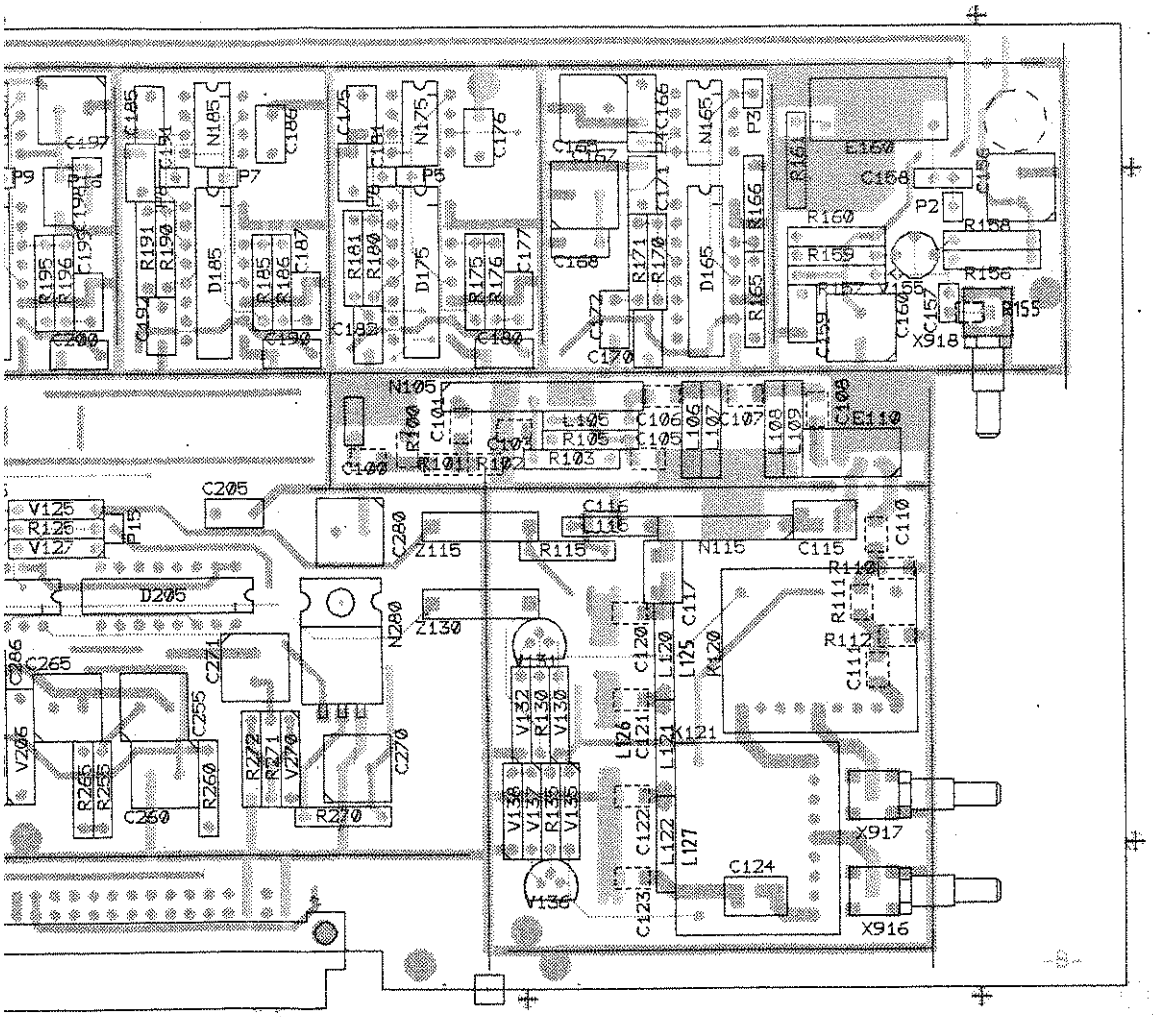

B	32914	12.85	BT	Maße ohne Toleranzangabe		Maßstab 1 : 1	
D	35531	11.86	BT			Halbzeug, Werkstoff	
E	35553	4.87	BT				
F	35553	4.87	PR				
H	38956	9.87	IB	1KSA	Tag	Name	Benennung
				Bearb.	12.85	BT	NK-Leistungsmesser Adjacent-channel power meter
				Gepr.			Z
				Norm			
Änd. Zust.	Änderungs-Mitteilung	Tag	Name	ROHDE&SCHWARZ		Zeichn.-Nr. 803.7832	Blatt-Nr. 3 v. Bl.
				zu Gerät CMT-B6		reg. i. V. 803.7810 V	erste Z.

ROHDE&SCHWARZ

SERVICE INSTRUCTIONS

Display/Keyboard Module

802.3662.00

Contents

Page

5 Service Manual for Display/Keyboard Module 5.1

5.1 Function Description 5.1
5.1.1 Key Detection 5.1
5.1.2 Rotary Pulse Generator 5.2
5.1.3 Display Control 5.2
5.1.4 LED/Illumination Control 5.3
5.1.5 Loudspeaker Amplifier 5.3

5.2 Testing and Adjustment 5.4
5.2.1 Key Detection 5.4
5.2.2 Rotary Pulse Generator 5.4
5.2.3 Display Control 5.5
5.2.4 LED/Illumination Control 5.5
5.2.5 Loudspeaker Amplifier 5.5

5.3 Troubleshooting 5.6

Component lists
Circuit diagrams
Component layout diagrams

5 Service Manual for Display/Keyboard Module

(See circuit diagram 802.3410 S)

5.1 Function Description

The display/keyboard module consists of five units:

- Key detection
- Rotary pulse generator (spinwheel)
- Display control
- LED/illumination control
- Loudspeaker amplifier

5.1.1 Key Detection

All keys on the front panel (except the STANDBY key) are combined into a matrix.

In the reset state, the columns (KQ0 to KQ9) are held Low (static) by a port of the main controller, the flip-flop D7.I being reset by a pulse on line RESKFF (active High).

The signal REPEAT (active High) is produced by ANDing (D6) when any key is pressed and leads to an interrupt of the main controller on the digital unit module (KEYINT, active High, edge-triggered). The number of the pressed key is determined by the software as follows:

a) All column inputs KQ1 to KQ9 to High, KQ0 to Low.
   If one of the row outputs KA0 to KA7 is Low, the pressed key is at position KQ0/KAx ($0 \leq x \leq 7$).

b) Repetition of a).
   For all columns (KQ1 to KQ9 in succession to Low).

c) The value is only processed further if unequivocal pressing of a key has been detected; the interrupt is otherwise ignored (contact bounce or simultaneous pressing of several keys).

d) The keyboard is activated again following key detection, i.e. all columns are set to Low and the flip-flop is reset.

Key debouncing is also handled by the software, i.e. the key detection routine only starts 20 ms after the interrupt has been generated (switch-on bounce) and resetting of flip-flop D7.I 20 ms after the signal REPEAT has dropped out (switch-off bounce).

5.1.2 Rotary Pulse Generator

The rotary pulse generator is a magnetic disk with 12 north and south poles, two permanent magnets for latching in and two Hall generators with associated logic to detect movements and directions (24 pulses per rotation).

When the spinwheel is rotated, two squarewave signals with a mark-to-space ratio of 1:1 are present at test points P6 and P7 offset in phase by 90 degrees. Each rising and falling edge at P7 generates an interrupt for the controller via D4.IV, D3.I, D3.II, D2.III, D4.I and D4.II (DREINT, active High, edge-triggered) provided that flip-flops D3.I and D3.II have been reset by pulse DRERES (active Low). The direction information provided by D1.I, D1.II, D2.I and D2.II is transferred by the reset pulse (DRERES) to flip-flop D5.I and is available at connection DREDIR (High corresponds to clockwise).

Evaluation sequence:

1. Reset rotary pulse generator (Low pulse at DRERES).

2. Second reset following interrupt by DREINT (High) + direction information available at DREDIR. Buffer counter (software) is incremented or decremented by main controller.

3. DREINT is enabled on the digital unit module.

5.1.3 Display Control

The LCDs are driven in multiplex mode by special drivers (D10 to D18). The multiplex depth is 4 (backplanes), the multiplex frequency approx. 200 Hz.

The drivers are in the basic status following the switch-on reset (>100 ms !) at connection RESET (active High), i.e. all LCD segments are dark. The drivers must first be initialized (COMMAND mode, LCDCD High) via the lines LCDSI (data, active High), LCDCK (clock, active Low) and LCDCD (command/data switchover). The internal memory of the drivers is then loaded with the contents of the display via the same lines (now in DATA mode) in the form of a 16-byte string. The line OPTPOL is used to synchronize the slower drivers with the main controller, i.e. this line becomes High following each byte and stops the processor until the data have been processed.

The individual drivers are selected by the shift registers D20 and D21 via the serial channel LCD-SEL (strobe) in conjunction with DO-L and CPS-L (data/clock).

All drivers are provided with a system clock of approx. 100 kHz (P5) from D18 via buffer D26.II/D26.III.

The display contrast depends on voltage V11 which is generated by V1/N1.I.

5.1.4 LED/Illumination Control

All LEDs (except the STANDBY LED) are controlled by shift registers D22, D23 and D24 via the serial channel LED (strobe) in conjunction with DO-L (data) and CPS-L (clock). Since LEDs of different luminosity are used, an additional driver (D25) is required for the green LEDs. The display illumination is controlled via a buffer (V2) and a delay element (R30/C30) in order to compensate for the PTC effect of the lamps.

5.1.5 Loudspeaker Amplifier

The AF to be amplified is coupled to X11.A8 at low impedance (impedance + 0 Ω). The control circuit for N100.I is on the analog unit and is identical to the control of N100.II. The lamps are used at this point for dynamic compression because of their PTC effect. The complementary output stages V100/V101 or V104/V105 enable the high output currents which are required because of the low circuit impedance.

5.2 Testing and Adjustment

5.2.1 Key Detection

Test: 1. Apply Low to KQ0 to KQ9.

2. The line REPEAT must become High when each key is pressed. If not: key faulty.

3. After resetting the flip-flop D7.I (pulse >500 ns at connection RESKFF, active High), a High must be present at connection KEYINT following pressing of any key until the next reset. If not: D7.I faulty (or control lines).

Adjustment: none

5.2.2 Rotary Pulse Generator

Test: When moving the spinwheel, a squarewave voltage with a mark-to-space ratio of 1:1 and a frequency 12 x rpm/3600 Hz must be measured at test points P6 and P7 with a phase offset of 90 degrees. Deviations from TTL level at test points P6 and P7 indicate a fault in the Hall generator B1 or B2. The Hall generators are maladjusted if the phase offset varies greatly from 90 degrees.

After resetting flip-flops D3.I and D3.II (Low pulse at input DRERES >500 ns, TTL level), the interrupt output DREINT must assume a High level each time the spinwheel is moved and the direction of rotation (High with clockwise rotation) following reset of output DREDIR.

Adjustment: none

5.2.3 Display Control

Test: Correct operation of the display driver largely depends on the initialization and data transmission by the controller. It is therefore recommendable to carry out the test in the instrument using the firmware test aids (e.g. D 12 SPEC) (see Section 4).

Adjustment: All drivers are supplied by D18 with a system clock of approx. 100 kHz (P5) via buffer D26.II/D26.III. Potentiometer R29 can be used to compensate for component tolerances. Since the write speed directly depends on this clock, R29 is set such that flickering of the display is just no longer visible (or set to 100 kHz at P5).

The display contrast depends on voltage V11 generated by V1/N1.I. The controller R26 can be used to optimally adjust the contrast (for the respective viewing angle, generally viewed below 30 degrees from above).

5.2.4 LED/Illumination Control

Test: All LCD segments and all LEDs must light up simultaneously when the instrument is switched on.

Adjustment: none

5.2.5 Loudspeaker Amplifier

Test: Apply an AC voltage with 1 kHz/10 mV to 1 V to X11.A8 (AC coupling as result of bias of -7.5 V, internal resistance of source corresponding to lamp H 100 or 100 Ω as substitute).

Check the output signal depending on the position of the loudspeaker control and the input level using an oscilloscope or loudspeaker (AC coupling since a bias of -7.5 V!).

Adjustment: none

5.3 Troubleshooting

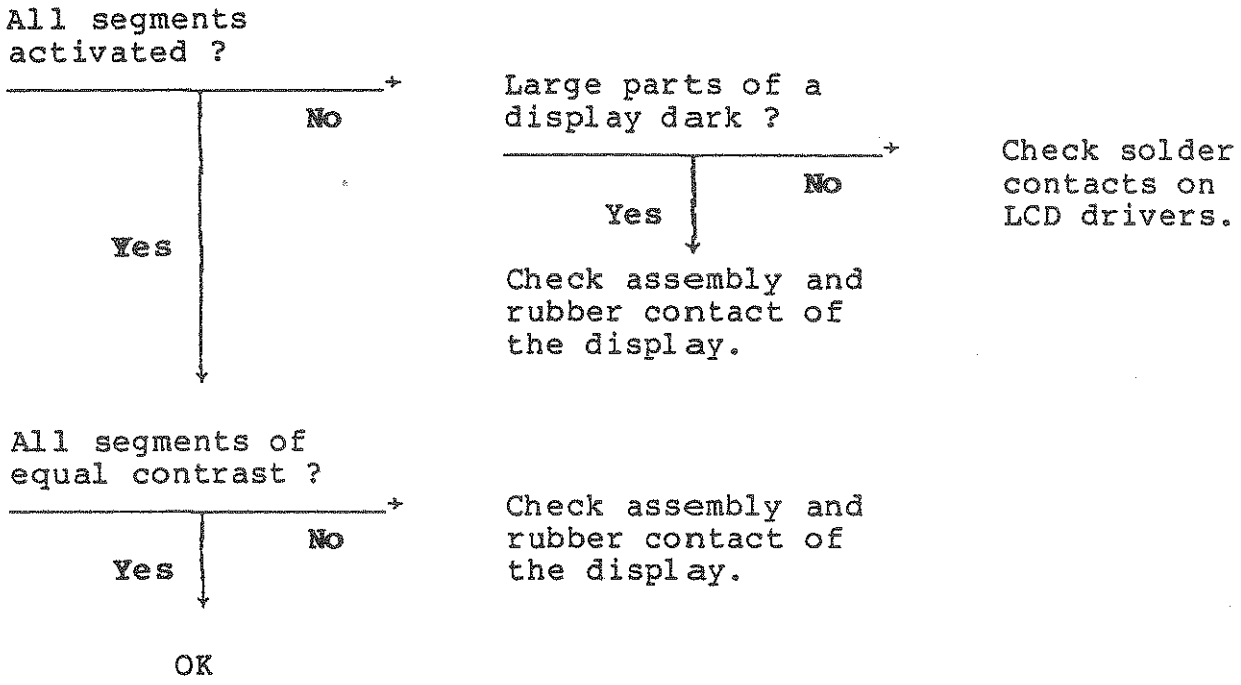

ROHDE & SCHWARZ
MÜNCHEN

Schaltteillisten
Stromläufe
Bestückungspläne

Parts lists
Circuit diagrams
Components plans

R 29500 Bl. 2

Kennz. Comp.No.	Benennung Designation	Sachnummer Stock No.	Hersteller Manufacturer	Bezeichnung Designation	enthalten in contained in
A10	ED ANZEIGE / TASTATUR NUR VAR/ONLY MOD: 02 DISPLAY KEYBOARD	802.3662.02			
A10	ED ANZEIGE/TASTATUR NUR VAR/ONLY MOD: 06 DISPLAY KEYBOARD	802.3662.06			
B1	EL LAUTSPR.0,5W RD50 SPEAKER	803.0509	VALVO	AD 2099 Z25	
C1	CE 470UF+-20%25V12,5X12,5 ELECTROLYTIC CAPACITOR	803.0715	MATSUSHITA	ECE-A1ESS-471U	
W45 -	DX KABEL (W45) CABLE (W45)	803.0367			
					- ENDE -

ROHDE & SCHWARZ	Äl	Datum Date	Schaltteilliste für Parts list for	Sachnummer Stock Nr.	Blatt Page
	02	1187	ZM FRONTPLATTE FRONT PANEL	802.3410.01 SA	1-

Für diese Unterlage behalten wir uns alle Rechte vor

Kennz. Comp.No.	Benennung Designation	Sachnummer Stock No.	Hersteller Manufacturer	Bezeichnung Designation	enthalten in contained in
.	ZUGEH.STROML./CIRC.DIAGR. 802.3410S				
B1	BS UGN3020T HALL-EFF.SW. HALL-EFF.SWITCH	BS 336.4750	SPRAGUE	UGN-3020T	
B2	BS UGN3020T HALL-EFF.SW. HALL-EFF.SWITCH	BS 336.4750	SPRAGUE	UGN-3020T	
C1 ..8	CC 1NF+-10%63V K2000 CERAMIC CAPACITOR	CC 022.0784	VALVO	2222 63051 102	
C10	CK 100NF+-5%63V5RM MKT CAPACITOR	CK 099.2930	WIMA	MKS/2/63/0,1UF/5%	
C11	CK 100NF+-5%63V5RM MKT CAPACITOR	CK 099.2930	WIMA	MKS/2/63/0,1UF/5%	
C12	CE 10 UF+-20%16V 7X 4X 8 ELECTROLYTIC CAPACITOR	CE 022.8085	ROEDERSTEI	ETR 2 10/16 20%	
C13	CE 22UF+-20%16V5RDX5RAD.A ELECTROLYTIC CAPACITOR	358.6062	NCC	SRE 22UF/16V+-20%	
C30	CE 4,7UF+-20%10V 5X 4X 7 ELECTROLYTIC CAPACITOR	CE 022.8056	ROEDERSTEI	ETR 1 4,7/10 20%	
C100	CC 10NF+-10%50V X7R 1206 CERAMIC CHIP CAPACITOR	CC 099.8521	VITRAMON	VJ1206Y103KFA	
C101	CC 10NF-20+50%7X8R4000 CAPACITOR	CC 087.7525	VALVO	2222 63051 64051103	
C103	CC 100NF+-10% 50V5K1200 C CAPACITOR	CC 082.3473	VITRAMON	VJ1812Y104KFA	
C201 ..207	CC 10NF-20+50%7X8R4000 CAPACITOR	CC 087.7525	VALVO	2222 63051 64051103	
C220 ..226	CC 10NF-20+50%7X8R4000 CAPACITOR	CC 087.7525	VALVO	2222 63051 64051103	
D1	BL SN74LS74AN 2/D-FLIPFL. IC FLIP-FLOP SN74LS74N	266.7934	TEXAS	SN74LS74N	
D2	BL SN74LS32N 4/2INP.OR IC OR GATE SN74LS32N	266.4687	TEXAS	SN74LS32N	
D3	BL SN74LS74AN 2/D-FLIPFL. IC FLIP-FLOP SN74LS74N	266.7934	TEXAS	SN74LS74N	
D4	BL SN74LS00N 4/2INP.NAND IC NAND GATE SN74LS00N	266.4641	TEXAS	SN74LS00N	
D5	BL SN74LS76AN 2/JK-MS-FLP IC FLIP FLOP SN74LS76N	266.2026	TEXAS	SN74LS76AN	
D6	BL CD4068BE 1X8IN.NANDG NAND GATE	BL 569.3161	RCA	CD4068BE	
D7	BL CD4013BE 2XD- FLIPFL FLIPFLOP	BL 086.7021	RCA	CD4013BE	
D8	ZM DREHIMPULSGEBER NUR VAR/ONLY MOD: 02 04 MOVING PULSE GENERATOR	EM 336.3348			
D10 ..16	BJ UPD7225G-00 LCD DRIV ALPHANUM.LCD CONTR/DRIVER	BJ 392.5320	NEC ELECTR	UPD7225G	
D17	BJ UPD7225G-00 LCD DRIV NUR VAR/ONLY MOD: 02 04 ALPHANUM.LCD CONTR/DRIVER	BJ 392.5320	NEC ELECTR	UPD7225G	
D18	BJ UPD7225G-00 LCD DRIV NUR VAR/ONLY MOD: 02 04 ALPHANUM.LCD CONTR/DRIVER	BJ 392.5320	NEC ELECTR	UPD7225G	
D20 ..24	BL CD4094BE 8BIT SH.REG SHIFT REGISTER	BL 586.7726	RCA	CD4094BE	
D25	BL SN7406N 6XINVERTER IC HEX INVERTER SN7406N	237.0487	TEXAS	SN7406N	
D26	BL CD4069UBE 6XINVERTER HEXINVERTER	BL 086.9999	RCA	CD40690BE	
H1 ..6	AF HLMP1503 LED GN RD3 NUR VAR/ONLY MOD: 02 04 LED	AF 252.5570	GEN.INSTR.	HLMP1503-1503-18/19	
H7	AF HLMP1700 LED RT RD3 NUR VAR/ONLY MOD: 02 04 LED	AF 099.9134	HP	HLMP1700	
H8	AF HLMP1700 LED RT RD3 NUR VAR/ONLY MOD: 02 04 LED	AF 099.9134	HP	HLMP1700	
H9	AF HLMP1700 LED RT RD3 NUR VAR/ONLY MOD: 02 04 LED	AF 099.9134	HP	HLMP1700	
H10	AF HLMP1700 LED RT RD3 NUR VAR/ONLY MOD: 02 04 LED	AF 099.9134	HP	HLMP1700	

Kennz. Comp.No.	Benennung Designation	Sachnummer Stock No.	Hersteller Manufacturer	Bezeichnung Designation	enthalten in contained in
H11	AF HLMP1700 LED RT RD3 NUR VAR/ONLY MOD: 02 04 LED	AF 099.9134	HP	HLMP1700	
H12	AF HLMP1700 LED RT RD3 NUR VAR/ONLY MOD: 02 04 LED	AF 099.9134	HP	HLMP1700	
H13	AF HLMP1719 LED GE RD3 NUR VAR/ONLY MOD: 02 04 LED	AF 099.9140	GEN.INSTR.	HLMP-1719	
H14	AF HLMP1719 LED GE RD3 NUR VAR/ONLY MOD: 02 04 LED	AF 099.9140	GEN.INSTR.	HLMP-1719	
H15	AF HLMP1719 LED GE RD3 NUR VAR/ONLY MOD: 06 LED	AF 099.9140	GEN.INSTR.	HLMP-1719	
H16	AF HLMP1719 LED GE RD3 NUR VAR/ONLY MOD: 06 LED	AF 099.9140	GEN.INSTR.	HLMP-1719	
H17 ..21	AF HLMP1719 LED GE RD3 NUR VAR/ONLY MOD: 02 04 LED	AF 099.9140	GEN.INSTR.	HLMP-1719	
H22	AF HLMP1719 LED GE RD3 NUR VAR/ONLY MOD: 04 FUER VAR 04/FOR MOD 04 LED	AF 099.9140	GEN.INSTR.	HLMP-1719	
H80	AF HLMP1719 LED GE RD3 NUR VAR/ONLY MOD: 06 LED	AF 099.9140	GEN.INSTR.	HLMP-1719	
H100	EF 6V 0,02A OHNE SOCKEL LAMP 6V	EF 803.0815	BUERKLIN	33 G112	
H101 ..106	EF 28V 24MIL.A DRAHTANS. LAMP	EF 455.2238	MGG	1280-00	
H107	EF 28V 24MIL.A DRAHTANS. NUR VAR/ONLY MOD: 02 04 LAMP	EF 455.2238	MGG	1280-00	
H108	EF 28V 24MIL.A DRAHTANS. NUR VAR/ONLY MOD: 02 04 LAMP	EF 455.2238	MGG	1280-00	
N1	BO CA3240AE 2XMOS OPAMP OPERATIONAL AMPLIFIER	302.7040	RCA	CA3240AE	
N100	BO TL072ACD 2XFET OPAMP FUER VAR 04/FOR MOD.04 ********** LF353 B0342.2291 FUER VAR 02/FOR MOD 02 OPERATIONAL AMPLIFIER	803.1057	TEXAS	TL072ACD	
P1	BP LCD 10X 7SEGM.11MM TFL LC-DISPLAY	803.0521	VARITRONIX	R&S-ZCHNG.803.0521"D	
P2	BP LCD 4X 7SEGM.11MM TFL LC-DISPLAY	803.0515	VARITRONIX	LCD 4X	
P3	BP LCD 4X 7SEGM.11MM TFL LC-DISPLAY	803.0515	VARITRONIX	LCD 4X	
P4	BP LCD 4X 7SEGM.11MM TFL NUR VAR/ONLY MOD: 02 04 LC-DISPLAY	803.0515	VARITRONIX	LCD 4X	
P5	VL WIRE-WRAP PIN WIRE-WRAP PIN	VL 088.4542	BERG	NR. 75 403-003	
P6	VL WIRE-WRAP PIN WIRE-WRAP PIN	VL 088.4542	BERG	NR. 75 403-003	
P7	VL WIRE-WRAP PIN WIRE-WRAP PIN	VL 088.4542	BERG	NR. 75 403-003	
R1	RL 0,35W 2,21KOHM+-1%TK50 RESISTOR	RL 082.2477	DRALORIC	SMA 0207/2,21K-F-C	
R2	RL 0,35W 2,21KOHM+-1%TK50 RESISTOR	RL 082.2477	DRALORIC	SMA 0207/2,21K-F-C	
R3	RL 0,35W 15,0KOHM+-1%TK50 RESISTOR	RL 083.1400	DRALORIC	SMA0207/15K-F-D	
R4	RL 0,35W 3,32KOHM+-1%TK50 RESISTOR	RL 083.0990	DRALORIC	SMA0207/3,32K-F-D	
R5	RN 7X3,3KOHM+-2%SIL 8 H5 RESISTOR NETWORK	RN 291.4387	BOURNS	4308R-101-332	
R10 ..21	RL 0,35W 10,0KOHM+-1%TK50 RESISTOR	RL 083.1297	DRALORIC	SMA0207/10K-F-D	
R22	RL 0,35W 22,1KOHM+-1%TK50 RESISTOR	RL 083.1545	DRALORIC	SMA/207/22,1K-F-C	

Kennz. Comp.No.	Benennung Designation	Sachnummer Stock No.	Hersteller Manufacturer	Bezeichnung Designation	enthalten in contained in
R23	RL 0,35W 100KOHM+-1%TK50 RESISTOR	RL 082.1764	DRALORIC	SMA0207/100K-F-C	
R24	RL 0,35W 681 KOHM+-1%TK50 RESISTOR	RL 083.2735	DRALORIC	SMA0207/381K-F-C	
R25	RL 0,35W 47,5KOHM+-1%TK50 RESISTOR	RL 083.1800	DRALORIC	SMA/207/47,5K-F-C	
R26	RS 0,5W5KOHM+-10%10X10X5 CERMET POTENTIOMETER T	RS 247.7890	BOURNS	3386F-1-502	
R27	RL 0,35W 5,62KOHM+-1%TK50 RESISTOR	RL 082.2190	DRALORIC	SMA0207/5,62K-F-C	
R28	RL 0,35W 200KOHM+-1%TK50 RESISTOR	RL 083.2235	DRALORIC	SMA0207/200K-F-D	
R29	RS 0,5W200KOHM+-10%10X10X CERMET POTENTIOMETER T	RS 087.7590	BOURNS	3386F-1-204	
R30	RL 0,35W 100KOHM+-1%TK50 RESISTOR	RL 082.1764	DRALORIC	SMA0207/100K-F-C	
R31	RL 0,35W 100KOHM+-1%TK50 RESISTOR	RL 082.1764	DRALORIC	SMA0207/100K-F-C	
R40 ..44	RN 4X120 OHM+-2%SIL 8 H5 RESISTOR NETWORK	RN 291.4470	BOURNS	4308R-102-121	
R45	RL 0,35W 121 OHM+-1%TK50 RESISTOR	RL 082.9859	DRALORIC	SMA0207/121OHM-F-D	
R46	RL 0,21W 1,00KOHM+-1%TK50 RESISTOR	RL 092.1444	RESISTA	MK1 1K00 1% TK50	
R47	RL 0,35W 1KOHM+-1%TK50 RESISTOR	RL 082.2160	DRALORIC	SMA0207/1K-F-C	
R49 ..52	RL 0,35W 1KOHM+-1%TK50 RESISTOR	RL 082.2160	DRALORIC	SMA0207/1K-F-C	
R53	RG 121 OHM+-1%TK100 1206 NUR VAR/ONLY MOD: 04 FUER VAR04/FOR MOD 04 CHIP RESISTOR	RG 006.8903	DALE	CRCW1206 121OHM F T	
R60 ..62	RL 0,35W 1KOHM+-1%TK50 RESISTOR	RL 082.2160	DRALORIC	SMA0207/1K-F-C	
R100	RS POTENTIOMETER POTENTIOMETER	802.3704			
R101	RL 0,35W 1KOHM+-1%TK50 RESISTOR	RL 082.2160	DRALORIC	SMA0207/1K-F-C	
R102	RL 0,35W 221 OHM+-1%TK50 RESISTOR	RL 083.0084	DRALORIC	SMA0207/221OHM-F-D	
R103	RG 215 OHM+-2%TK200 1206 TRIMMWERT/SELECTED CHIP RESISTOR	006.8961	DRALORIC	CGB3216 215OHM2% TK	
R104	RG 1000 OHM+-1%TK100 1206 CHIP RESISTOR	RG 006.7271	DALE	CRCW1206 1,0KOHM F T	
R105	RG 4,64KOHM+-2%TK200 1206 CHIP RESISTOR	007.0712	DRALORIC	CGB 3216 4,64KOHM 2%	
R106	RL 0,35W4,64KOHM+-1%TK50 RESISTOR	RL 082.1687	DRALORIC	SMA0207/4,64K-F-C	
S1 ..9	SB TASTER 1XA OHNE KNOPF NUR VAR/ONLY MOD: 02 04 PUSHBUTTON SWITCH	SB 238.3850	SIEMENS	STB11 M.LED-LOECHERN	
S11	SB TASTER 1XA OHNE KNOPF PUSHBUTTON SWITCH	SB 238.3850	SIEMENS	STB11 M.LED-LOECHERN	
S12	SB TASTER 1XA OHNE KNOPF PUSHBUTTON SWITCH	SB 238.3850	SIEMENS	STB11 M.LED-LOECHERN	
S13	SB TASTER 1XA OHNE KNOPF NUR VAR/ONLY MOD: 02 04 PUSHBUTTON SWITCH	SB 238.3850	SIEMENS	STB11 M.LED-LOECHERN	
S14	SB TASTER 1XA OHNE KNOPF NUR VAR/ONLY MOD: 02 04 PUSHBUTTON SWITCH	SB 238.3850	SIEMENS	STB11 M.LED-LOECHERN	
S15	SB TASTER 1XA OHNE KNOPF NUR VAR/ONLY MOD: 02 04 PUSHBUTTON SWITCH	SB 238.3850	SIEMENS	STB11 M.LED-LOECHERN	
S16 ..19	SB TASTER 1XA OHNE KNOPF PUSHBUTTON SWITCH	SB 238.3850	SIEMENS	STB11 M.LED-LOECHERN	
S21	SB TASTER 1XA OHNE KNOPF NUR VAR/ONLY MOD: 02 04 PUSHBUTTON SWITCH	SB 238.3850	SIEMENS	STB11 M.LED-LOECHERN	
S22	SB TASTER 1XA OHNE KNOPF PUSHBUTTON SWITCH	SB 238.3850	SIEMENS	STB11 M.LED-LOECHERN	
S23	SB TASTER 1XA OHNE KNOPF PUSHBUTTON SWITCH	SB 238.3850	SIEMENS	STB11 M.LED-LOECHERN	
S24	SB TASTER 1XA OHNE KNOPF NUR VAR/ONLY MOD: 02 04 PUSHBUTTON SWITCH	SB 238.3850	SIEMENS	STB11 M.LED-LOECHERN	

uns alle Rechte vor

Kennz. Comp.No.	Benennung Designation	Sachnummer Stock No.	Hersteller Manufacturer	Bezeichnung Designation	enthalten in contained in
S25	SB TASTER 1XA OHNE KNOPF NUR VAR/ONLY MOD: 02 04 PUSHBUTTON SWITCH	SB 238.3850	SIEMENS	STB11 M.LED-LOECHERN	
S26 ..29	SB TASTER 1XA OHNE KNOPF PUSHBUTTON SWITCH	SB 238.3850	SIEMENS	STB11 M.LED-LOECHERN	
S31	SB TASTER 1XA OHNE KNOPF PUSHBUTTON SWITCH	SB 238.3850	SIEMENS	STB11 M.LED-LOECHERN	
S32	SB TASTER 1XA OHNE KNOPF PUSHBUTTON SWITCH	SB 238.3850	SIEMENS	STB11 M.LED-LOECHERN	
S33	SB TASTER 1XA OHNE KNOPF PUSHBUTTON SWITCH	SB 238.3850	SIEMENS	STB11 M.LED-LOECHERN	
S34	SB TASTER 1XA OHNE KNOPF NUR VAR/ONLY MOD: 02 04 PUSHBUTTON SWITCH	SB 238.3850	SIEMENS	STB11 M.LED-LOECHERN	
S35	SB TASTER 1XA OHNE KNOPF NUR VAR/ONLY MOD: 04 PUSHBUTTON SWITCH	SB 238.3850	SIEMENS	STB11 M.LED-LOECHERN	
S36	SB TASTER 1XA OHNE KNOPF PUSHBUTTON SWITCH	SB 238.3850	SIEMENS	STB11 M.LED-LOECHERN	
S37	SB TASTER 1XA OHNE KNOPF PUSHBUTTON SWITCH	SB 238.3850	SIEMENS	STB11 M.LED-LOECHERN	
S38	SB TASTER 1XA OHNE KNOPF PUSHBUTTON SWITCH	SB 238.3850	SIEMENS	STB11 M.LED-LOECHERN	
S39	SB TASTER 1XA OHNE KNOPF NUR VAR/ONLY MOD: 02 04 PUSHBUTTON SWITCH	SB 238.3850	SIEMENS	STB11 M.LED-LOECHERN	
S41 ..45	SB TASTER 1XA OHNE KNOPF NUR VAR/ONLY MOD: 02 04 PUSHBUTTON SWITCH	SB 238.3850	SIEMENS	STB11 M.LED-LOECHERN	
S46 ..49	SB TASTER 1XA OHNE KNOPF PUSHBUTTON SWITCH	SB 238.3850	SIEMENS	STB11 M.LED-LOECHERN	
S53	SB TASTER 1XA OHNE KNOPF NUR VAR/ONLY MOD: 04 PUSHBUTTON SWITCH	SB 238.3850	SIEMENS	STB11 M.LED-LOECHERN	
S54	SB TASTER 1XA OHNE KNOPF NUR VAR/ONLY MOD: 04 PUSHBUTTON SWITCH	SB 238.3850	SIEMENS	STB11 M.LED-LOECHERN	
S55	SB TASTER 1XA OHNE KNOPF NUR VAR/ONLY MOD: 02 04 PUSHBUTTON SWITCH	SB 238.3850	SIEMENS	STB11 M.LED-LOECHERN	
S56	SB TASTER 1XA OHNE KNOPF PUSHBUTTON SWITCH	SB 238.3850	SIEMENS	STB11 M.LED-LOECHERN	
S57	SB TASTER 1XA OHNE KNOPF NUR VAR/ONLY MOD: 02 04 PUSHBUTTON SWITCH	SB 238.3850	SIEMENS	STB11 M.LED-LOECHERN	
S58	SB TASTER 1XA OHNE KNOPF NUR VAR/ONLY MOD: 02 04 PUSHBUTTON SWITCH	SB 238.3850	SIEMENS	STB11 M.LED-LOECHERN	
S59	SB TASTER 1XA OHNE KNOPF PUSHBUTTON SWITCH	SB 238.3850	SIEMENS	STB11 M.LED-LOECHERN	
S61	SB TASTER 1XA OHNE KNOPF NUR VAR/ONLY MOD: 04 PUSHBUTTON SWITCH	SB 238.3850	SIEMENS	STB11 M.LED-LOECHERN	
S62	SB TASTER 1XA OHNE KNOPF NUR VAR/ONLY MOD: 04 06 PUSHBUTTON SWITCH	SB 238.3850	SIEMENS	STB11 M.LED-LOECHERN	
S63	SB TASTER 1XA OHNE KNOPF NUR VAR/ONLY MOD: 04 PUSHBUTTON SWITCH	SB 238.3850	SIEMENS	STB11 M.LED-LOECHERN	
S64	SB TASTER 1XA OHNE KNOPF NUR VAR/ONLY MOD: 04 PUSHBUTTON SWITCH	SB 238.3850	SIEMENS	STB11 M.LED-LOECHERN	
S65	SB TASTER 1XA OHNE KNOPF PUSHBUTTON SWITCH	SB 238.3850	SIEMENS	STB11 M.LED-LOECHERN	
S66 ..69	SB TASTER 1XA OHNE KNOPF NUR VAR/ONLY MOD: 02 04 PUSHBUTTON SWITCH	SB 238.3850	SIEMENS	STB11 M.LED-LOECHERN	
S75 ..79	SB TASTER 1XA OHNE KNOPF NUR VAR/ONLY MOD: 02 04 PUSHBUTTON SWITCH	SB 238.3850	SIEMENS	STB11 M.LED-LOECHERN	
S80	SB TASTER 1XA OHNE KNOPF NUR VAR/ONLY MOD: 02 06 PUSHBUTTON SWITCH	SB 238.3850	SIEMENS	STB11 M.LED-LOECHERN	
S80	SB TASTER 1XA OHNE KNOPF NUR VAR/ONLY MOD: 04 PUSH BUTTON SWITCH	834.9020	SIEMENS	V42263-D0011-A009	

Kennz. Comp.No.	Benennung Designation	Sachnummer Stock No.	Hersteller Manufacturer	Bezeichnung Designation	enthalten in contained in
V1	AK BCY59IX NPN 45V 200MA TRANSISTOR	AK 010.5163	SIEMENS	BCY59IX	
V2	AM 2N6659 NKAN 35V FET MOS-FET	AM 303.9324	SILICONIX	2N6659	
V4	AD 1N4448 75V 0,15A UDI DIODE	AD 012.0700	TEXAS INST	1N4448 GEGURTET	
V100	AK BC337-40 NPN 45V 800MA TRANSISTOR	303.9524	INTERMETAL	BC337-40	
V101	AK BC327-40 PNP 45V 800MA TRANSISTOR	303.9518	INTERMETAL	BC327-40	
V104	AK BC337-40 NPN 45V 800MA TRANSISTOR	303.9524	INTERMETAL	BC337-40	
V105	AK BC327-40 PNP 45V 800MA TRANSISTOR	303.9518	INTERMETAL	BC327-40	
X13	FR IC-FASSUNG 20POL.DIL SOCKET	FR 092.7142	PRECICONT	USD20T	
X14	FP WINKELSTECKERLEIST.36P 3-POLIG/3 PINS ANGLE PIN CONNECTOR	FP 243.3578	BERG	75168-113-36	
X14	DX BUCHSENEINHEIT X14 NUR VAR/ONLY MOD: 04 CONNECTOR X14	834.9614			
X15	FM BUCHSENLEISTE 9P.W.WP. NUR VAR/ONLY MOD: 02 04 CONNECTOR	FM 614.3760	FCT	F 9S4	
X11A	FP WINKELSTECKERLEIST.36P 8-POLIG/8 PINS ANGLE PIN CONNECTOR	FP 243.3578	BERG	75168-113-36	
X11B	FP STECKERL.ABGEW.36-POL. 8-POLIG/8 PINS ANGLE PIN CONNECTOR	FP 087.9105	BERG	75168-114-36	
X12A	FP STECKERL.ABGEW.36-POL. 10-POLIG/10 PINS ANGLE PIN CONNECTOR	FP 087.9105	BERG	75168-114-36	
X12B	FP WINKELSTECKERLEIST.36P 10-POLIG/10 PINS ANGLE PIN CONNECTOR	FP 243.3578	BERG	75168-113-36	
					- ENDE -

uns alle Rechte vor

Zuordnung Taste → Funktion
siehe Blatt 3

°) nur für VAR 06
only for model 06

*) nicht für VAR 06
not for model 06

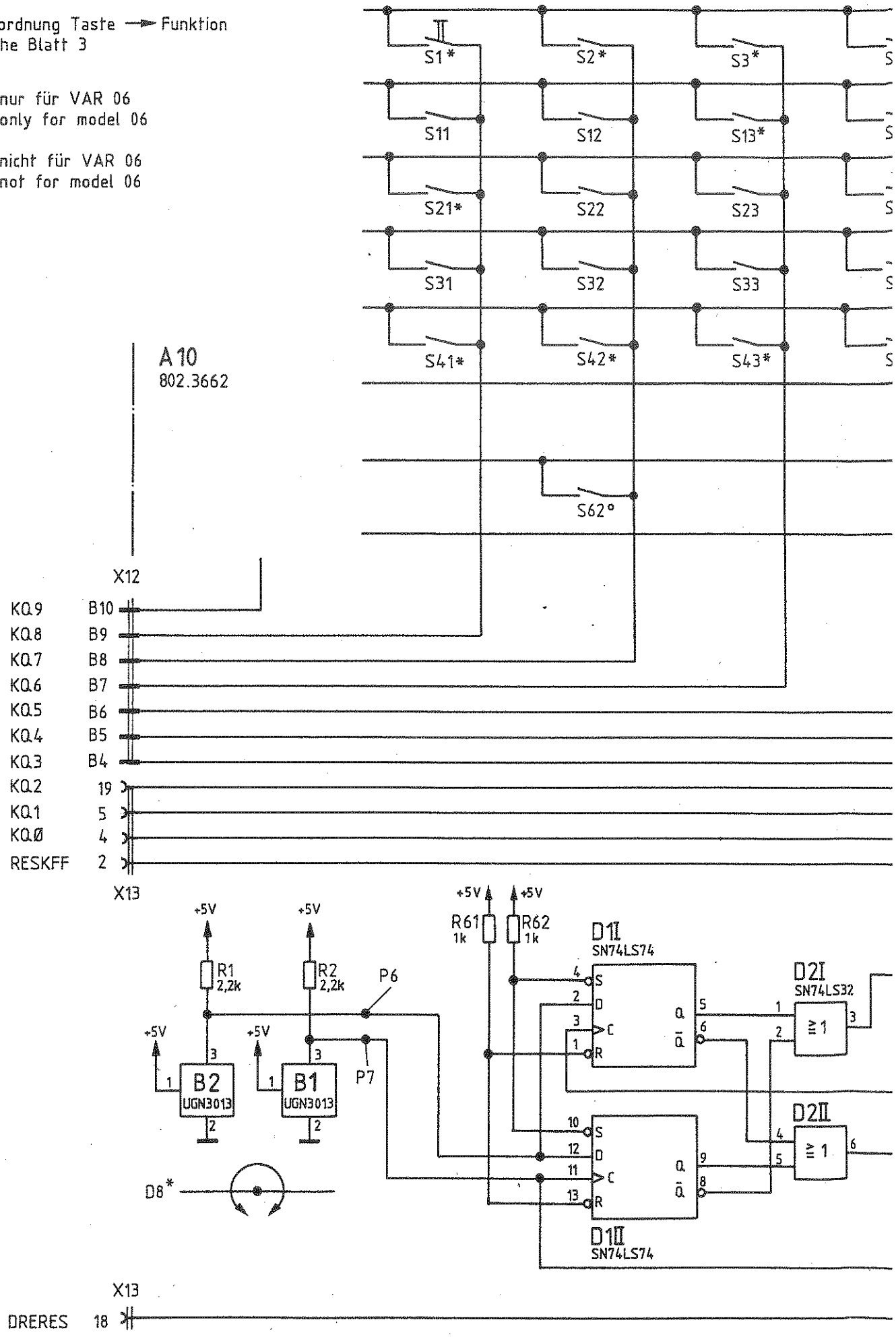

ROHDE&SCHWARZ

						CO	IB
					4.86	11.87	
				32954	38951		
			B	E			
		GU	CO				
10.84	10.84						
gezeichnet	bearbeitet	geprüft	normgepr.				

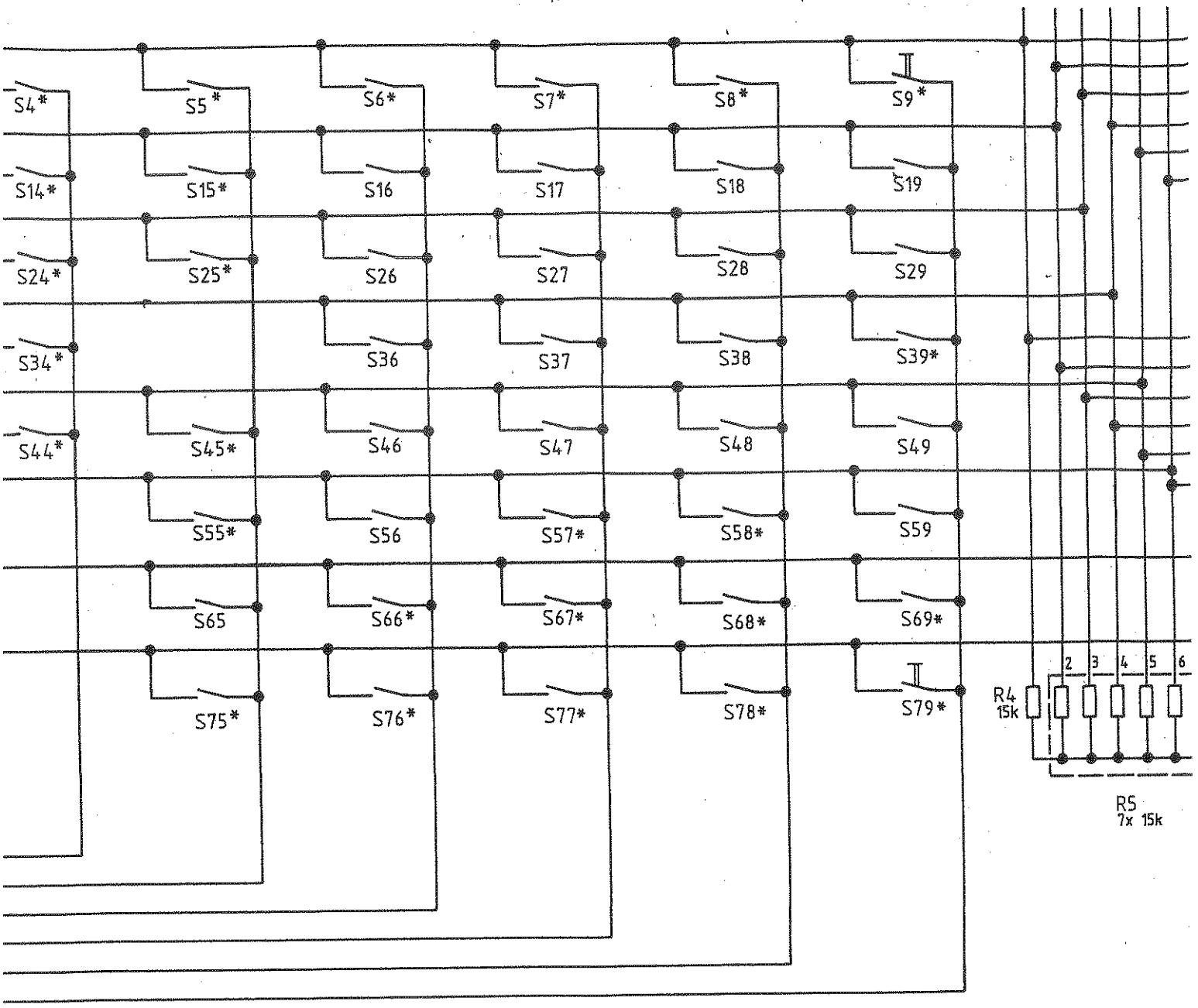
S4*
S5*
S6*
S7*
S8*
S9*
S14*
S15*
S16
S17
S18
S19
S24*
S25*
S26
S27
S28
S29
S34*
S36
S37
S38
S39*
S44*
S45*
S46
S47
S48
S49
S55*
S56
S57*
S58*
S59
S65
S66*
S67*
S68*
S69*
S75*
S76*
S77*
S78*
S79*
R4
15k
R5
7x 15k

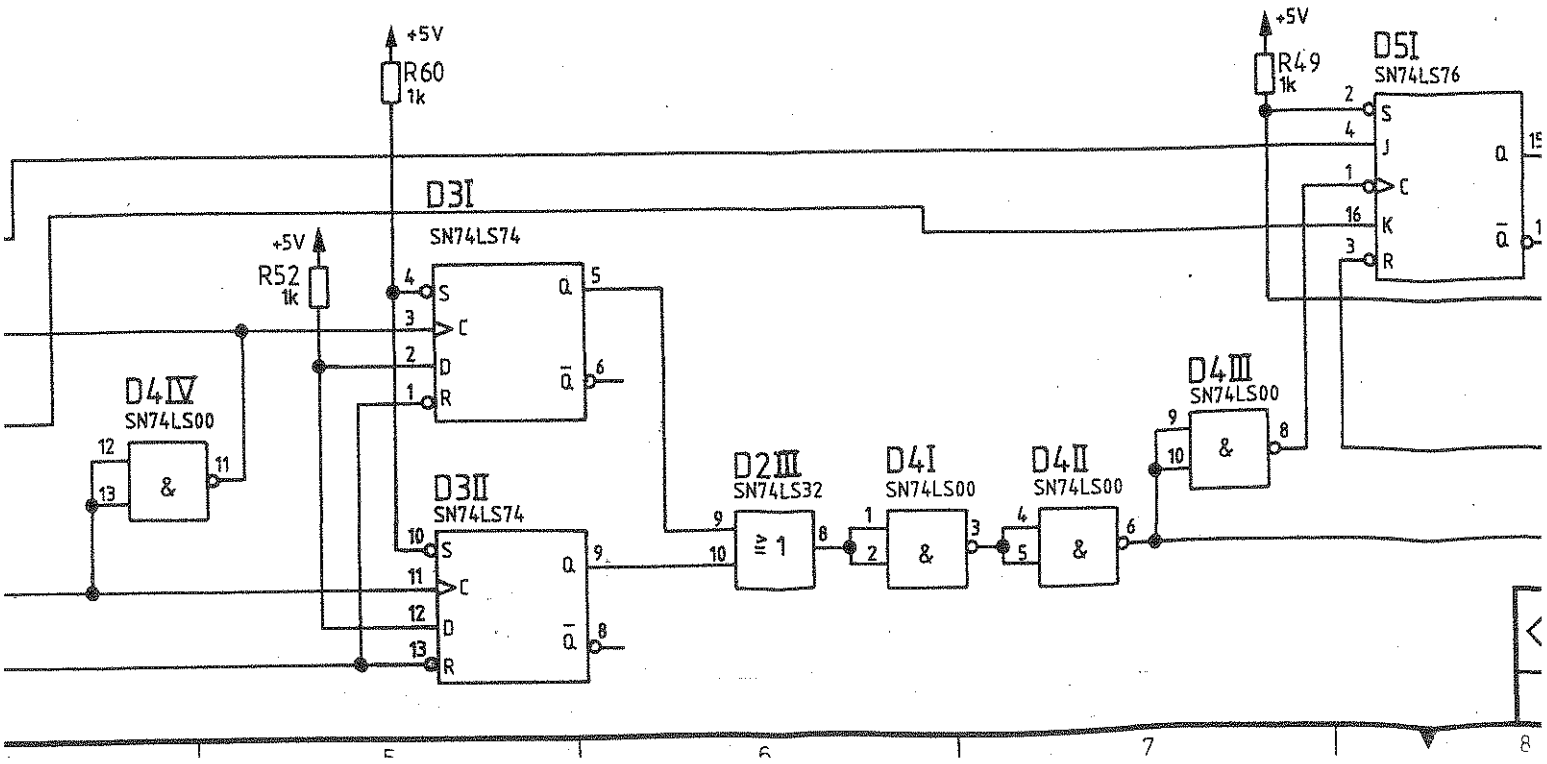
+5V
R60
1k
R52
1k
R49
1k
D3I
SN74LS74
D3II
SN74LS74
D4IV
SN74LS00
D2III
SN74LS32
D4I
SN74LS00
D4II
SN74LS00
D4III
SN74LS00
D5I
SN74LS76

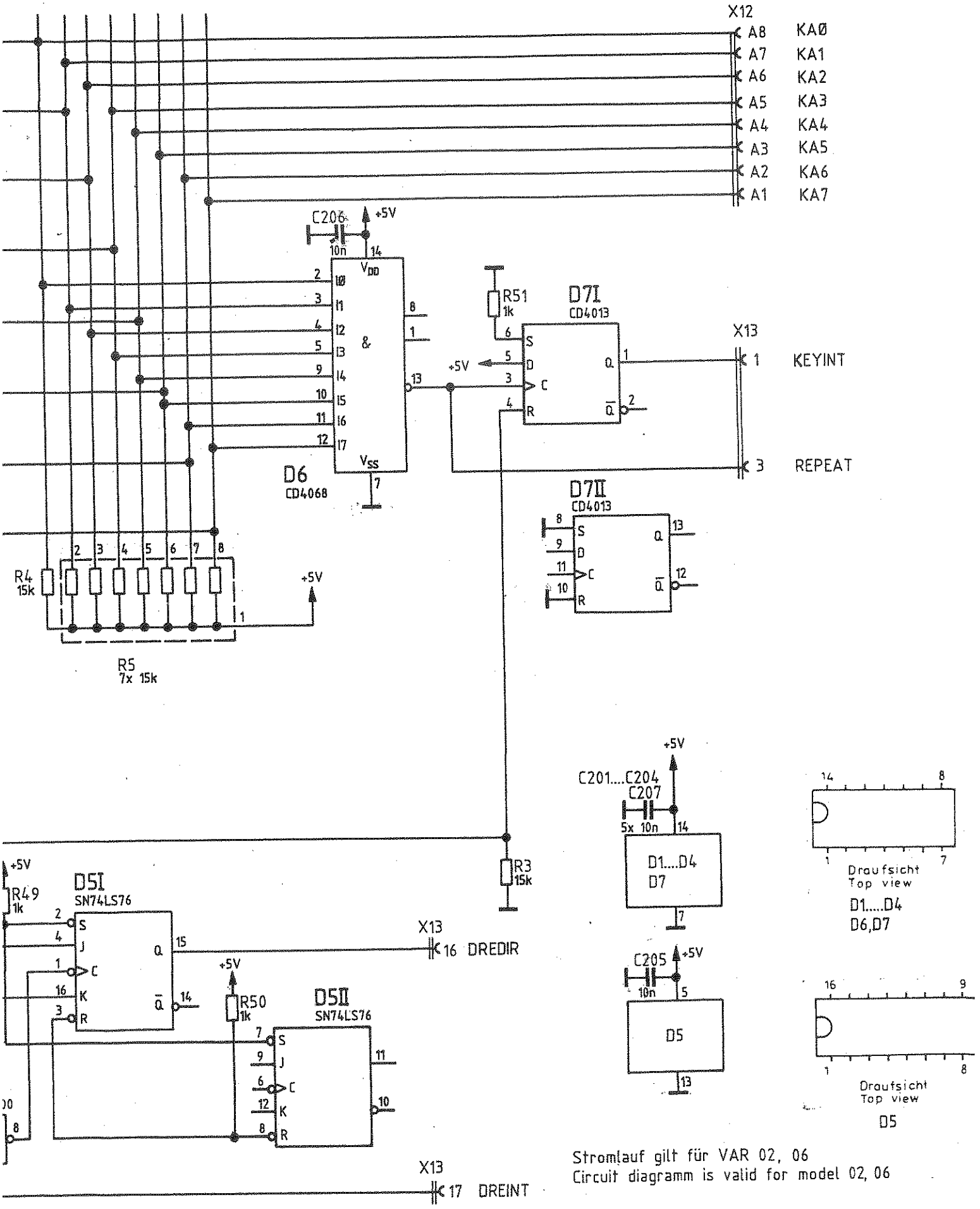

Stromlauf gilt für VAR 02, 06
Circuit diagramm is valid for model 02, 06

Stromlauf zu Frontplatte / Front panel	Z	Zeichn.-Nr. 802.3410 S	Blatt 1
CMT	reg. i. V. 802.2020 V	erste Z. 802.3410	v.

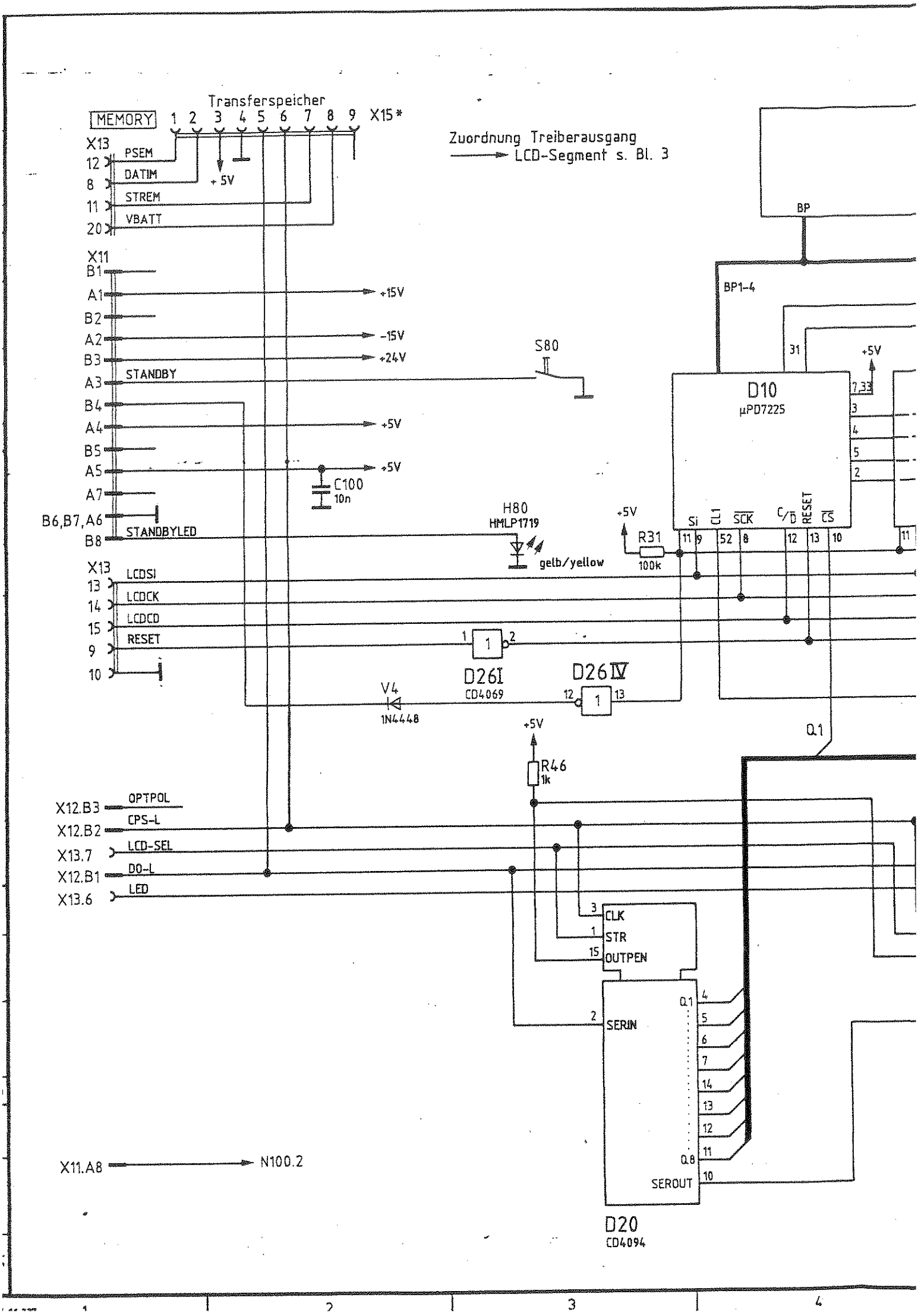
Transferspeicher
MEMORY
1 2 3 4 5 6 7 8 9 X15*
X13
12 PSEM
8 DATIM
11 STREM
20 VBATT
+5V
Zuordnung Treiberausgang
LCD-Segment s. Bl. 3
BP
BP1-4
X11
B1
A1 +15V
B2
A2 -15V
B3 +24V
A3 STANDBY
B4
A4 +5V
B5
A5 +5V
A7
B6,B7,A6
B8 STANDBYLED
C100
10n
S80
H80
HMLP1719
gelb/yellow
R31
100k
D10
µPD7225
Si
CLI
SCK
C/D
RESET
CS
X13
13 LCDSI
14 LCDCK
15 LCDCD
9 RESET
10
D26I
CD4069
D26IV
V4
1N4448
R46
1k
Q.1
X12.B3 OPTPOL
X12.B2 CPS-L
X13.7 LCD-SEL
X12.B1 DO-L
X13.6 LED
CLK
STR
OUTPEN
SERIN
SEROUT
Q.8
X11.A8
N100.2
D20
CD4094

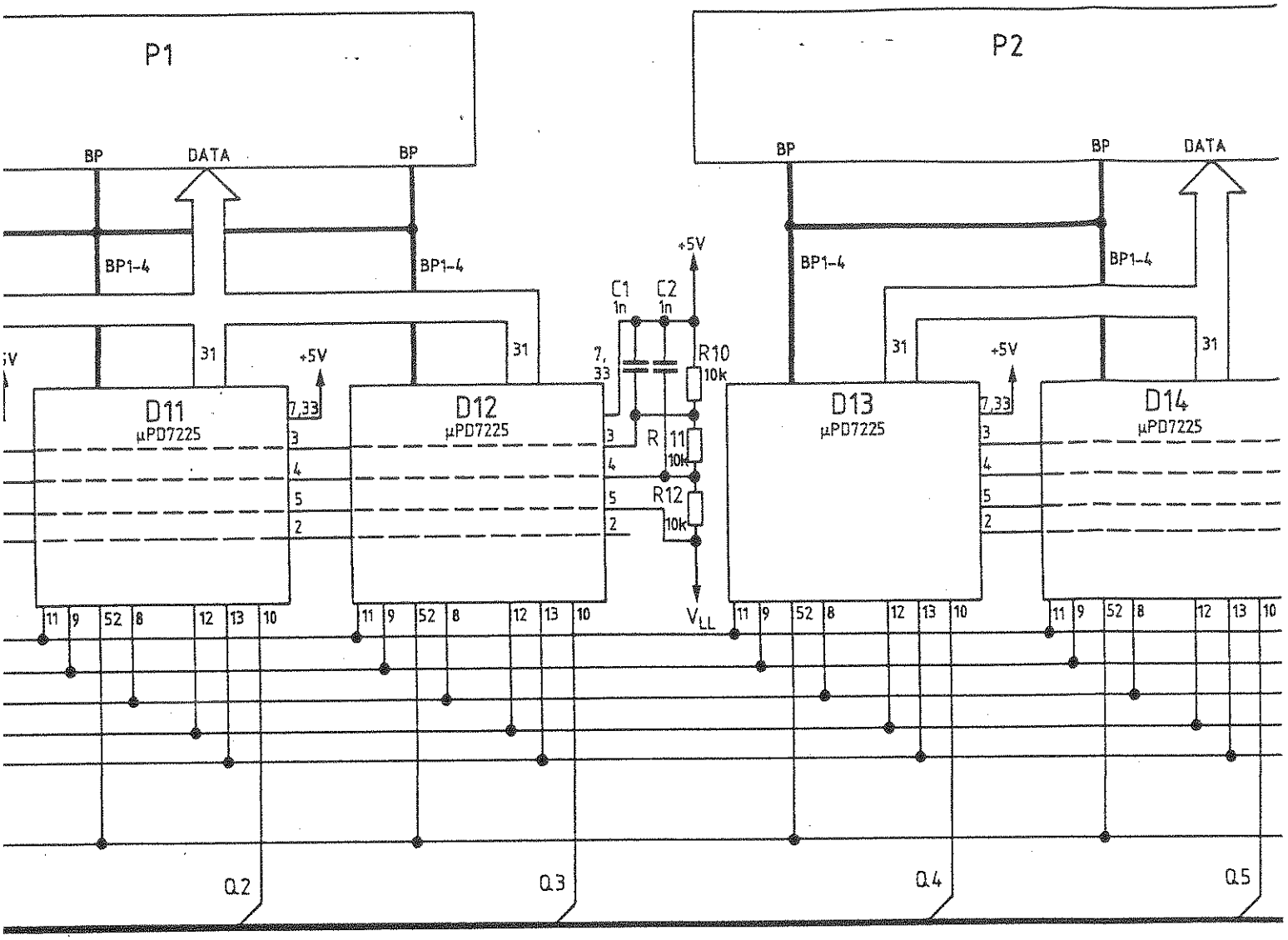
P1
P2
BP
DATA
BP1-4
+5V
C1 1n
C2 1n
R10 10k
R11 10k
R12 10k
7,33
31
D11 µPD7225
D12 µPD7225
D13 µPD7225
D14 µPD7225
V_{LL}
Q2
Q3
Q4
Q5

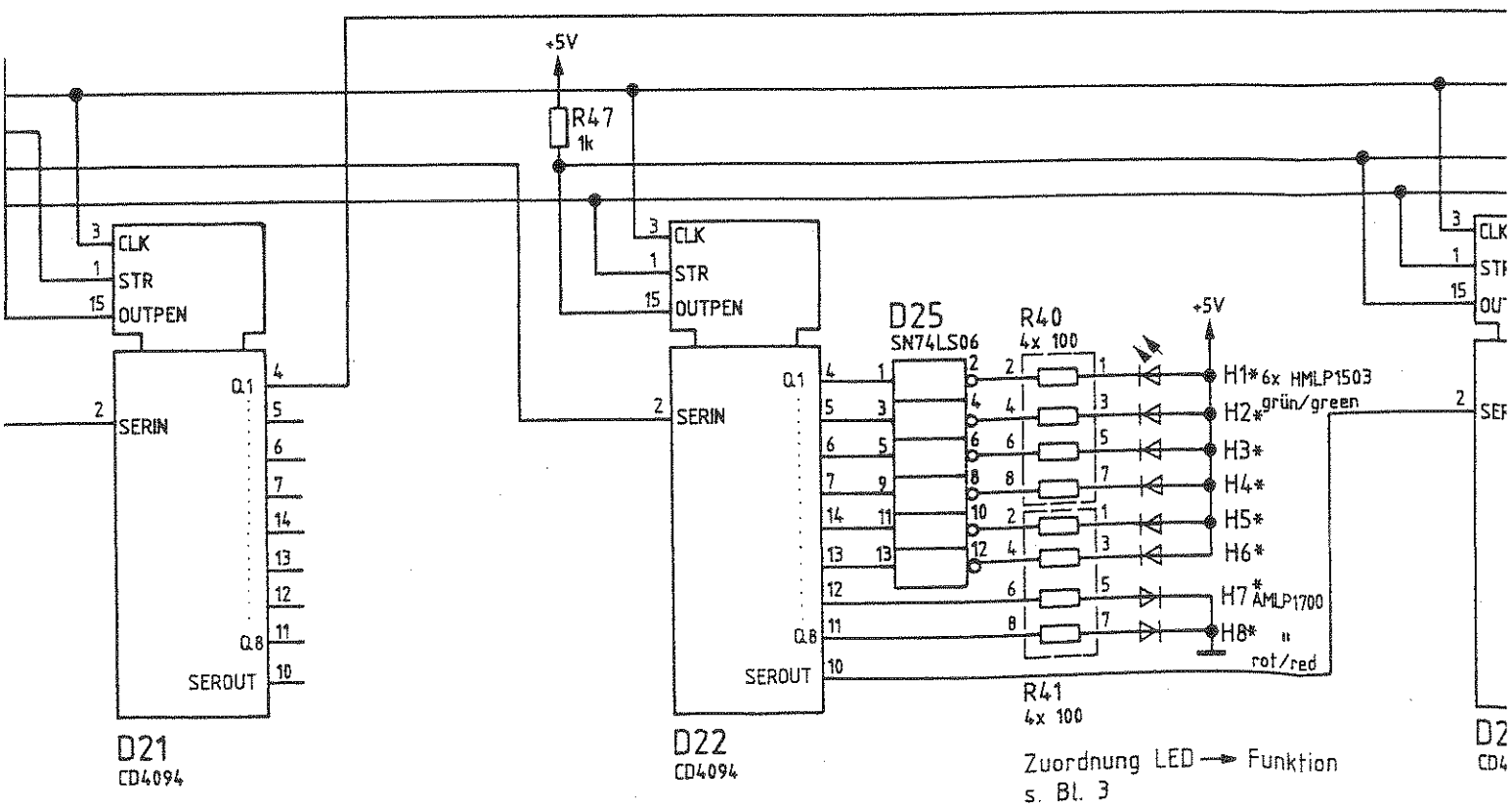
+5V
R47 1k
CLK
STR
OUTPEN
SERIN
SEROUT
Q1
Q8
D21 CD4094
D22 CD4094
D25 SN74LS06
R40 4x 100
R41 4x 100
H1* 6x HMLP1503 grün/green
H2*
H3*
H4*
H5*
H6*
H7* AMLP1700 rot/red
H8*
Zuordnung LED → Funktion s. Bl. 3

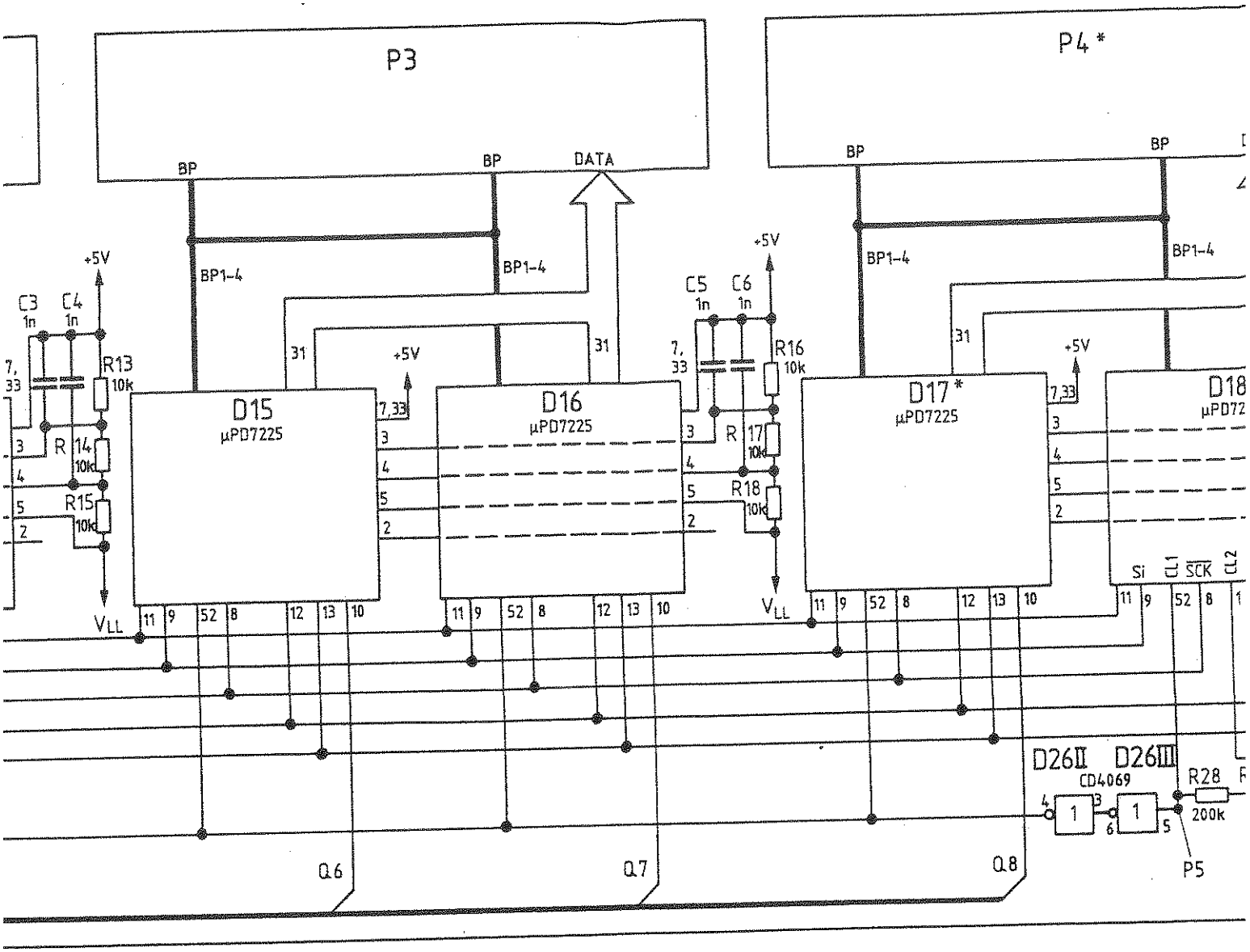

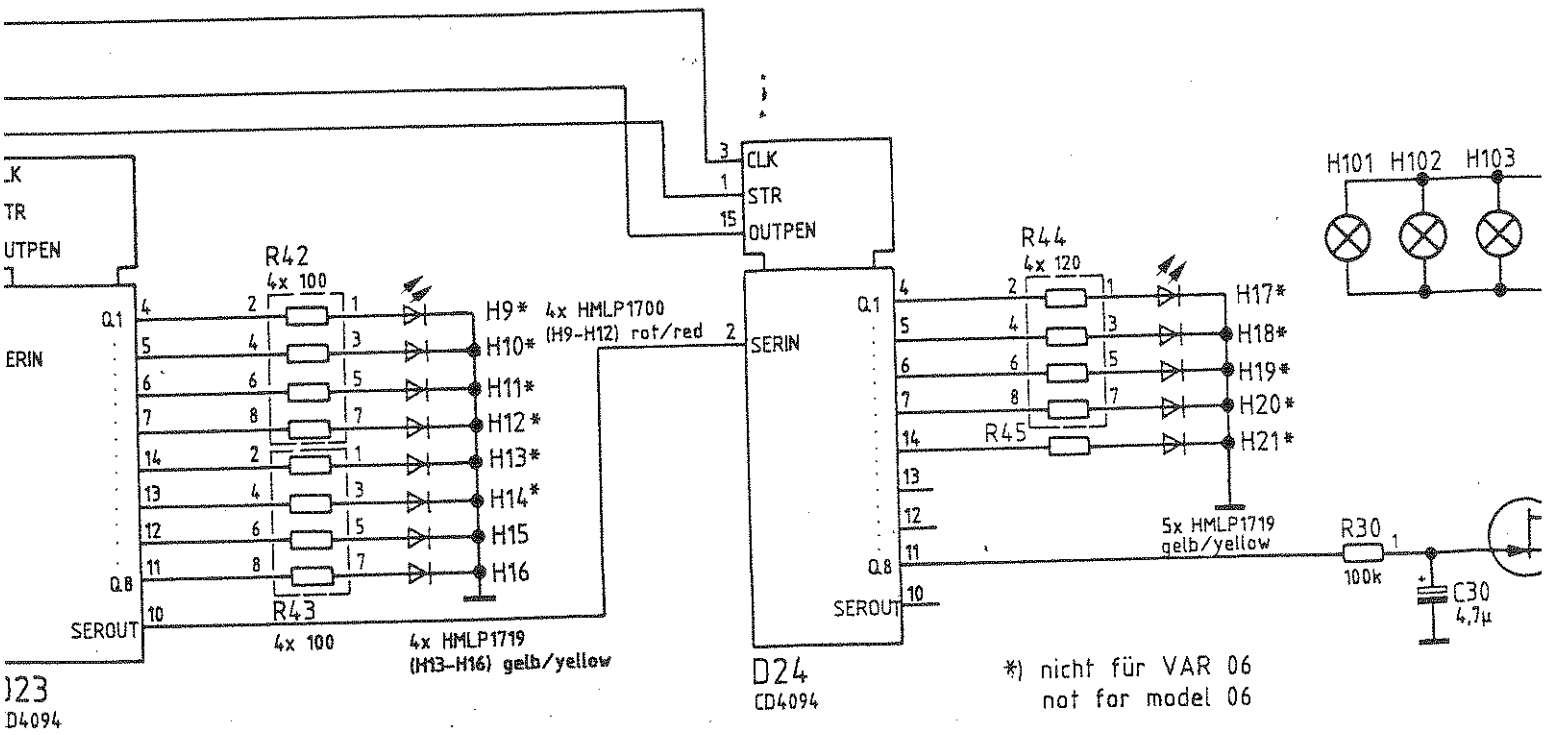

Klebekante für Druckerzeugnis durch diese Zone möglichst nur Leitungen führen

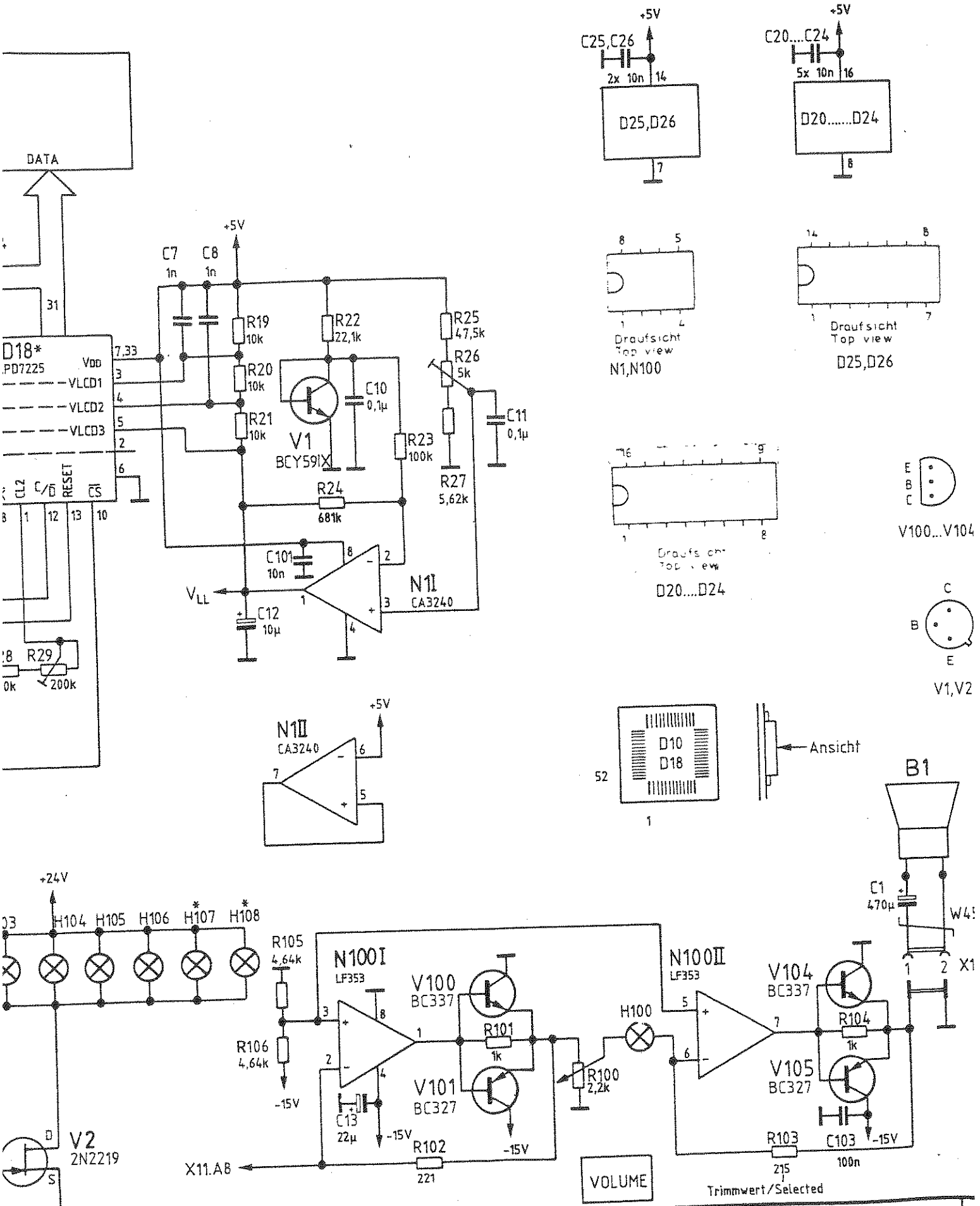
DATA
D18*
PD7225
VDD
VLCD1
VLCD2
VLCD3
CL2
C/D
RESET
CS
+5V
C7 1n
C8 1n
R19 10k
R20 10k
R21 10k
R22 22,1k
R23 100k
R24 681k
R25 47,5k
R26 5k
R27 5,62k
C10 0,1µ
C11 0,1µ
V1 BCY59IX
C101 10n
C12 10µ
N1I CA3240
VLL
R29 200k
N1II CA3240
+5V C25,C26 2x 10n
D25,D26
+5V C20....C24 5x 10n
D20.....D24
Draufsicht Top view
N1,N100
D25,D26
D20....D24
V100...V104
V1,V2
D10 D18
Ansicht
B1
C1 470µ
W45
X1
+24V
H104 H105 H106 H107 H108
R105 4,64k
R106 4,64k
-15V
N100I LF353
V100 BC337
V101 BC327
R101 1k
R100 2,2k
C13 22µ
R102 221
X11.AB
H100
N100II LF353
V104 BC337
V105 BC327
R104 1k
R103 215
C103 100n
Trimmwert/Selected
VOLUME
V2 2N2219
Stromlauf zu
Frontplatte / Front panel
Z
Zeichn.-Nr.
802.3410 S
CMT
reg. i. V. 802.2020 V
erste Z. 802.3410
PF 095 4115-0480
12
13
14
15

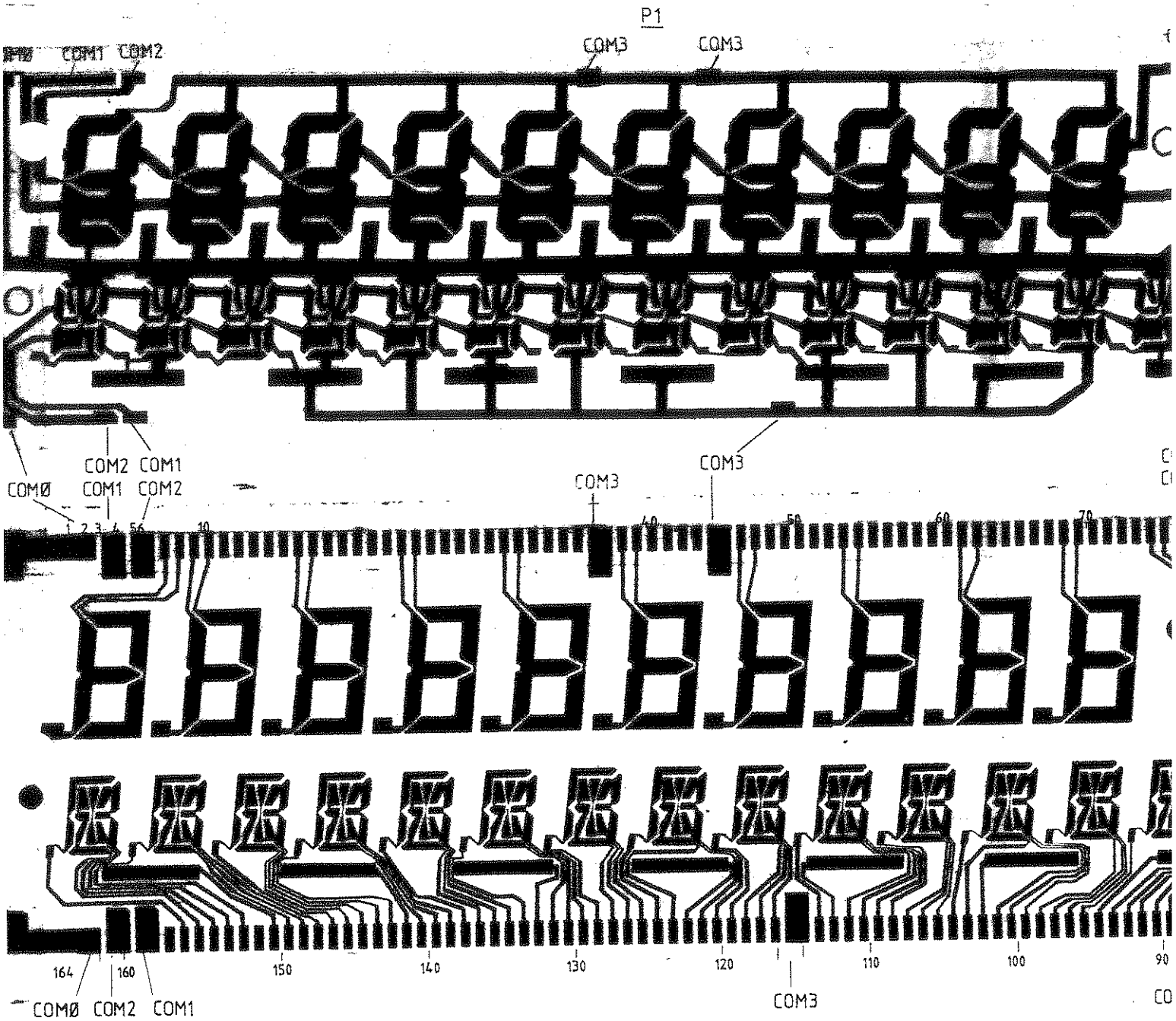

P 1	Treiber/Driver D10	D11	D12	PIN	P 1	Treiber/Driver D10	D11	D12	PIN	P 1	Treiber/Driver D10	D11	D12	PIN	P 1	Treiber/Driver D10	D11	D12	PIN	P 1	Tr D
1,2	X	X	X	15	46		X		31	89			X	48	106			X	35	125	
3,4	X	X	X	16	47		X		32	90			X	49	107			X	34	126	X
5,6	X	X	X	17	53		X		34	91		X		50	108			X	32	127	X
7		X		19	54		X		35	92			X	47	109			X	31	128	X
8		X		20	61		X		36	93			X	46	110			X	30	129	X
9		X		21	62		X		37	94			X	45	111			X	29	130	X
10		X		22	68		X		38	95		X		49	112			X	28	131	X
16		X		23	69		X		39	96			X	44	113		X		47	132	X
17		X		24	74		X		40	97			X	43	114			X	27	133	
23		X		25	75		X		41	98			X	42	115,116	X	X	X	18	134	X
		X		26	76		X		42	99			X	41	117			X	26	135	X
30		X		27	77,78	X	X	X	17	100			X	40	118			X	25	136	X
31		X		28	79,80	X	X	X	16	101			X	39	119			X	24	137	X
36,37	X	X	X	18	81,82	X	X	X	15	102			X	38	120			X	23	138	X
38		X		29	83,84	X	X	X	17	103		X		48	121			X	22	139	X
39		X		30	85,86	X	X	X	16	104			X	37	122			X	21	140	X
44,45	X	X	X	18	87,88	X	X	X	18	105			X	36	123		X		46	141	X
															124			X	19		

37 1 2 3 4

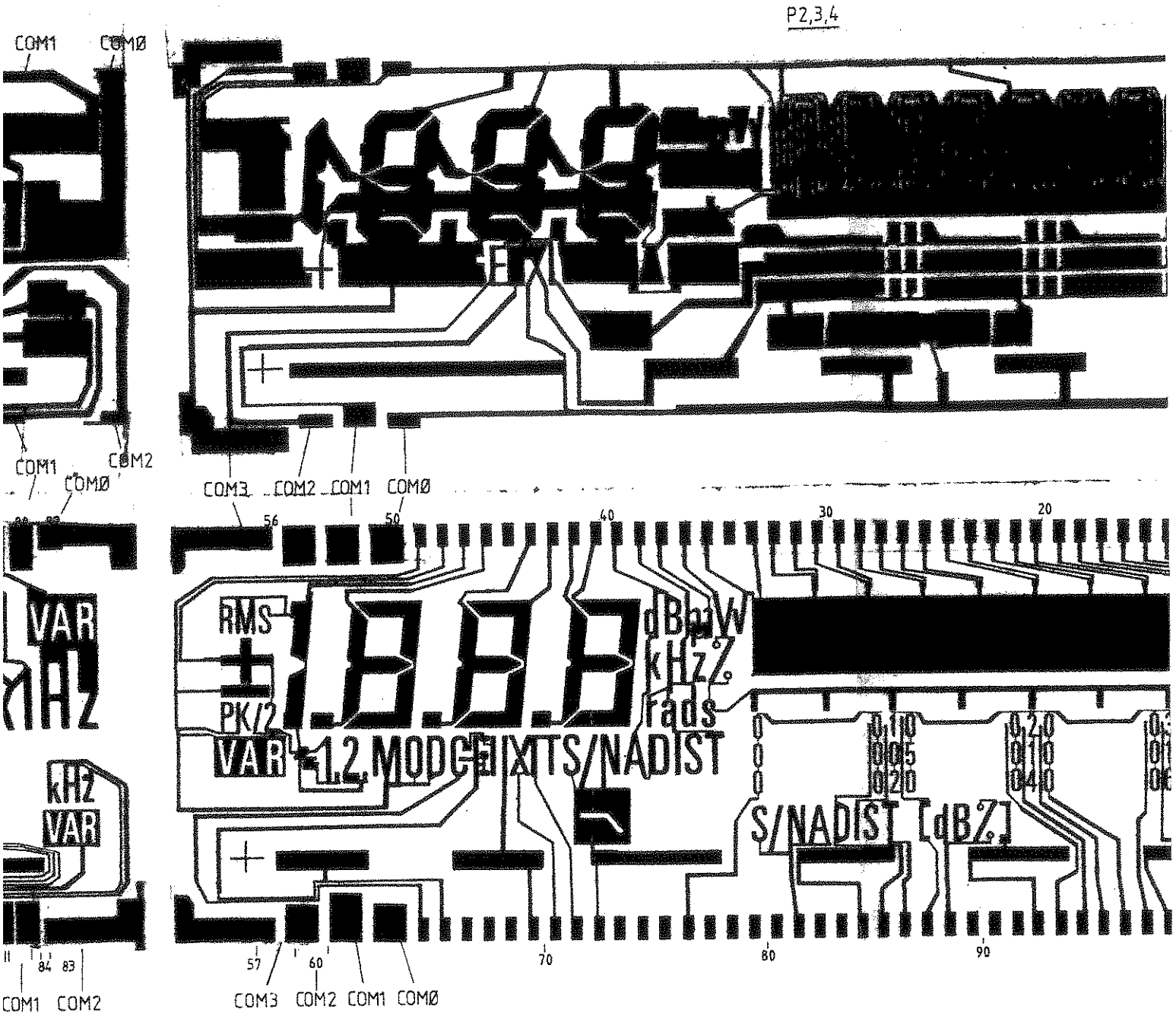

P2 → D13,D14 ≙ P3 → D14,D15 ≙ P4 → D16,D17

r/Driver 11	D12	PIN	P 1	Treiber/Driver D10	D11	D12	PIN
	X	19	142		X		44
		47	143	X			31
		46	144	X			30
		45	145	X			29
		44	146	X			28
		43	147	X			27
		42	148	X			26
		41	149	X			25
X		45	150	X			24
		40	151		X		43
		39	153	X			23
		38	154	X			22
		37	155	X			21
		36	156	X			20
		35	157	X			19
		34	159,160	X	X	X	16
		32	161,162	X	X	X	17
			163,164	X	X	X	15

P 2	Treiber/Driver D13	D14	PIN	P 2	Treiber/Driver D13	D14	PIN	P 2	Treiber/Driver D13	D14	PIN	P 2	Treiber/Driver D13	D14	PIN
1,2	X	X	18	22	X		30	40		X	23	65		X	32
3,4	X	X	17	23	X		29	41		X	24	66		X	34
5,6	X	X	16	24	X		28	42		X	25	70		X	35
7,8	X	X	15	25	X		27	43		X	26	71		X	36
9	X		44	26	X		26	44		X	27	72		X	37
10	X		43	27	X		25	45		X	28	73		X	38
11	X		42	28	X		24	46		X	29	77	X		46
12	X		41	29	X		23	47		X	30	82		X	39
13	X		40	30	X		22	48		X	31	85		X	40
14	X		39	31	X		21	49,50	X	X	15	86	X		47
15	X		38	32	X		20	51,52	X	X	16	87	X		48
16	X		37	33	X		19	53,54	X	X	17	88	X		49
17	X		36	35	X		45	55,56	X	X	18	89		X	41
18	X		35	36		X	19	57,58	X	X	18	93		X	42
19	X		34	37		X	20	59,60	X	X	17	94	X		47
20	X		32	38		X	21	61,62	X	X	16	95	X		48
21	X		31	39		X	22	63,64	X	X	15	96	X		49

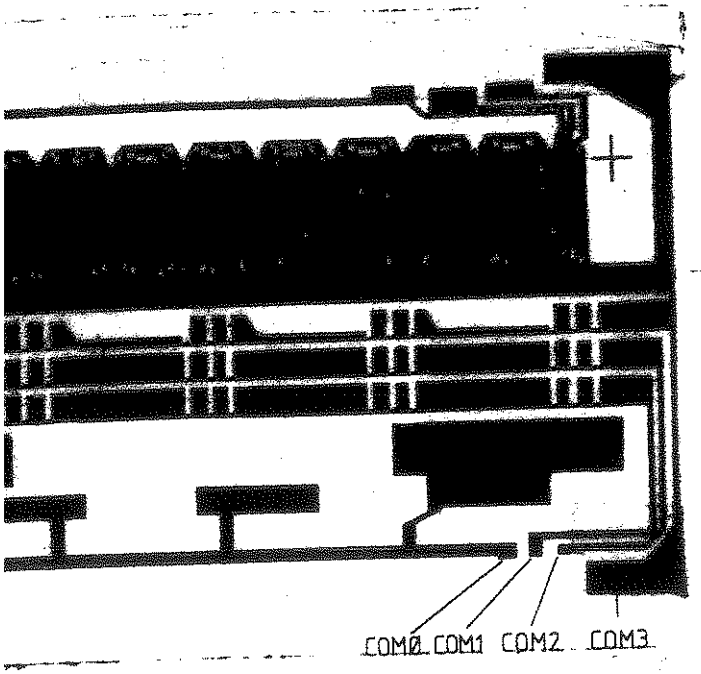

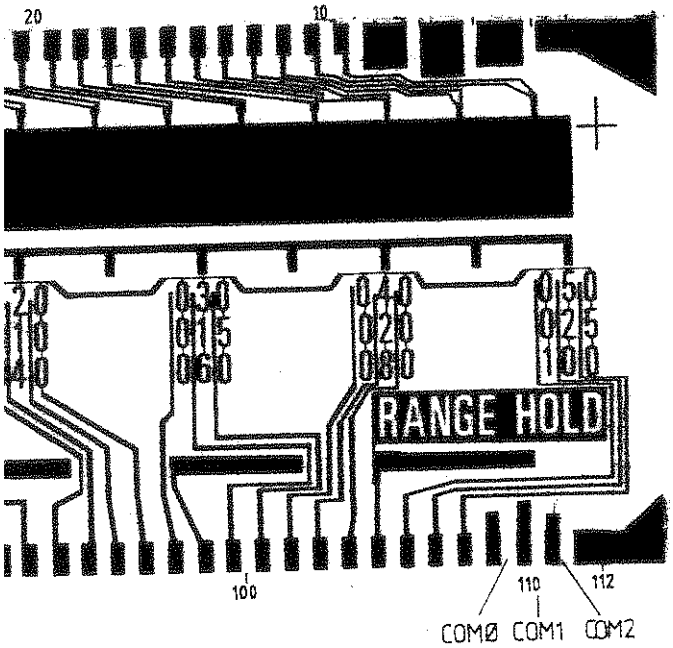

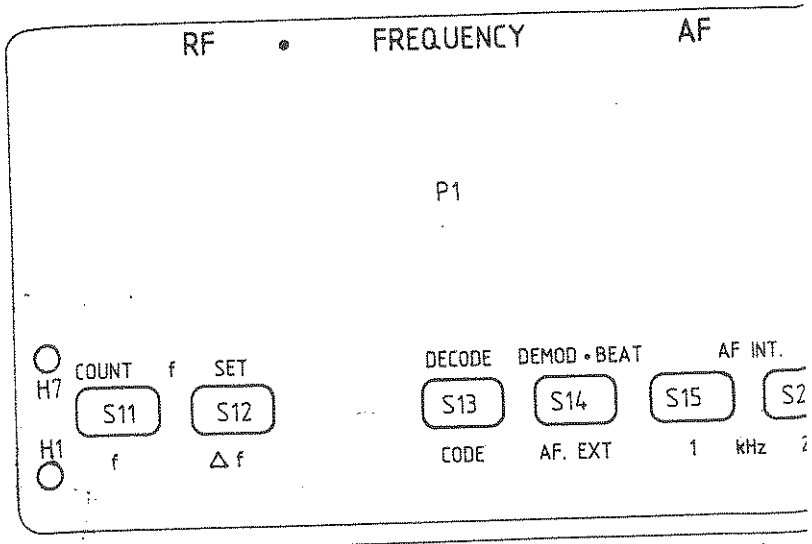

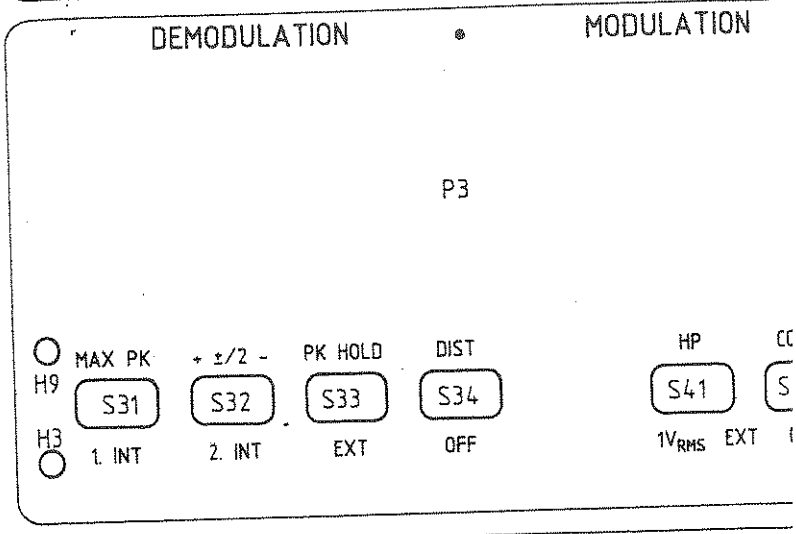

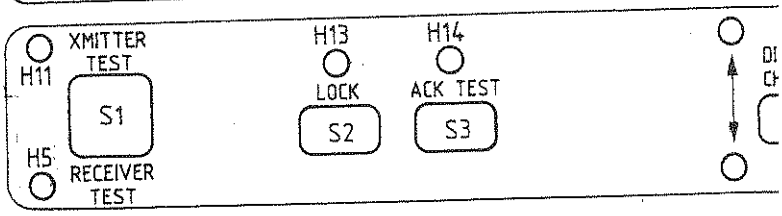

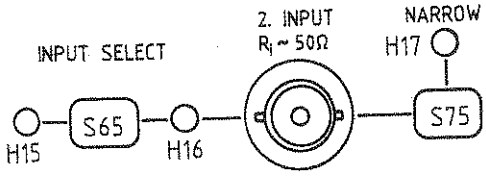

D16,D17

P2	Treiber/Driver D13	D14	PIN	P 2	Treiber/Driver D13	D14	PIN
65		X	32	97	X		46
66		X	34	98	X		47
70		X	35	99		X	43
71		X	36	100	X		48
72		X	37	101	X		49
73		X	38	102	X		47
77	X		46	103	X		48
82		X	39	104	X		49
85		X	40	105		X	44
86	X		47	106	X		46
87	X		48	107	X		47
88	X		49	108	X		48
89		X	41	109	X	X	15
93		X	42	110	X	X	16
94	X		47	111	X	X	17
95	X		48	112	X	X	18
96	X		49				

Klebekante für Druckerzeugnis ; durch diese Zone möglichst nur Leitungen führen.

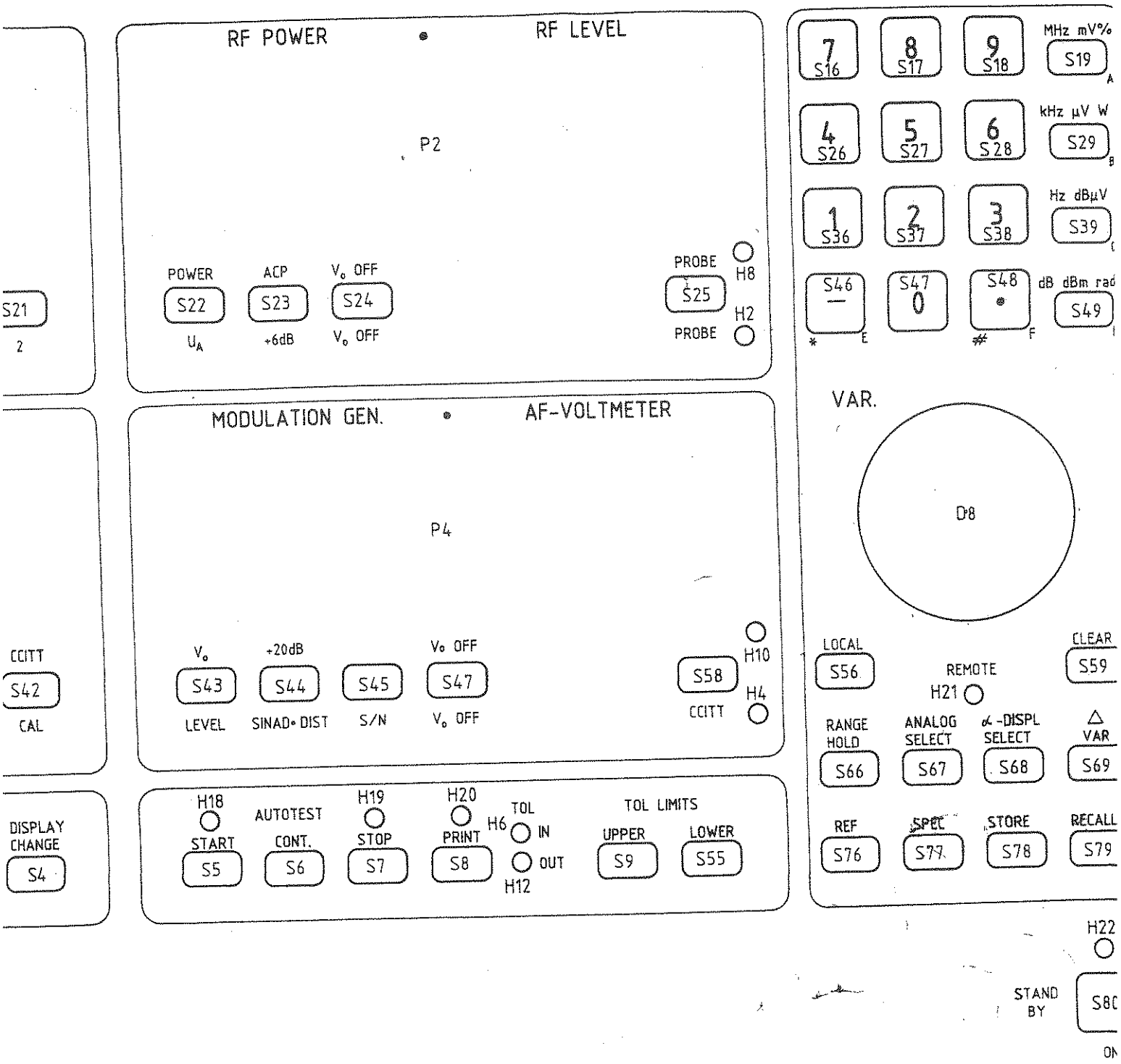

Stromlauf gilt nur für VAR 02
Circuit diagramm is valid only for model 02

Stromlauf zu	Frontplatte / Front panel	Z	Zeichn.-Nr. 802.3410 S
CMT –	reg. i. V. 802.2020 V	erste Z. 802.3410	

Ansicht und Leitung
View of tracks on c

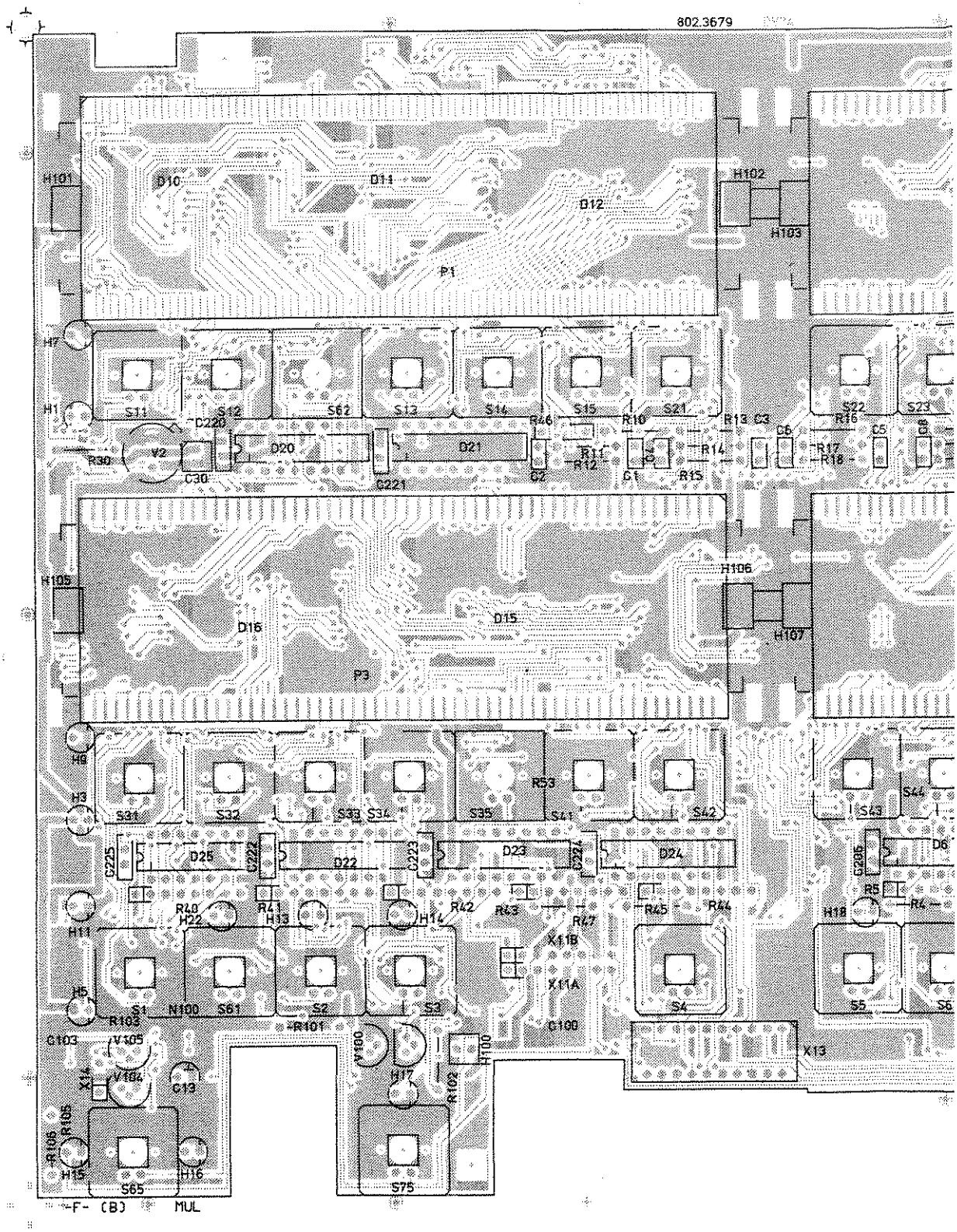

(hierzu HVC 250)

ACHTUNG: EGB!
Elektrostatisch gefährdete Bauelemente erfordern eine besondere Handhabung.

ATTENTION ESD!
Electrostatic sensitive devices require a special handling.

ungsführung Bauteilseite
n component side

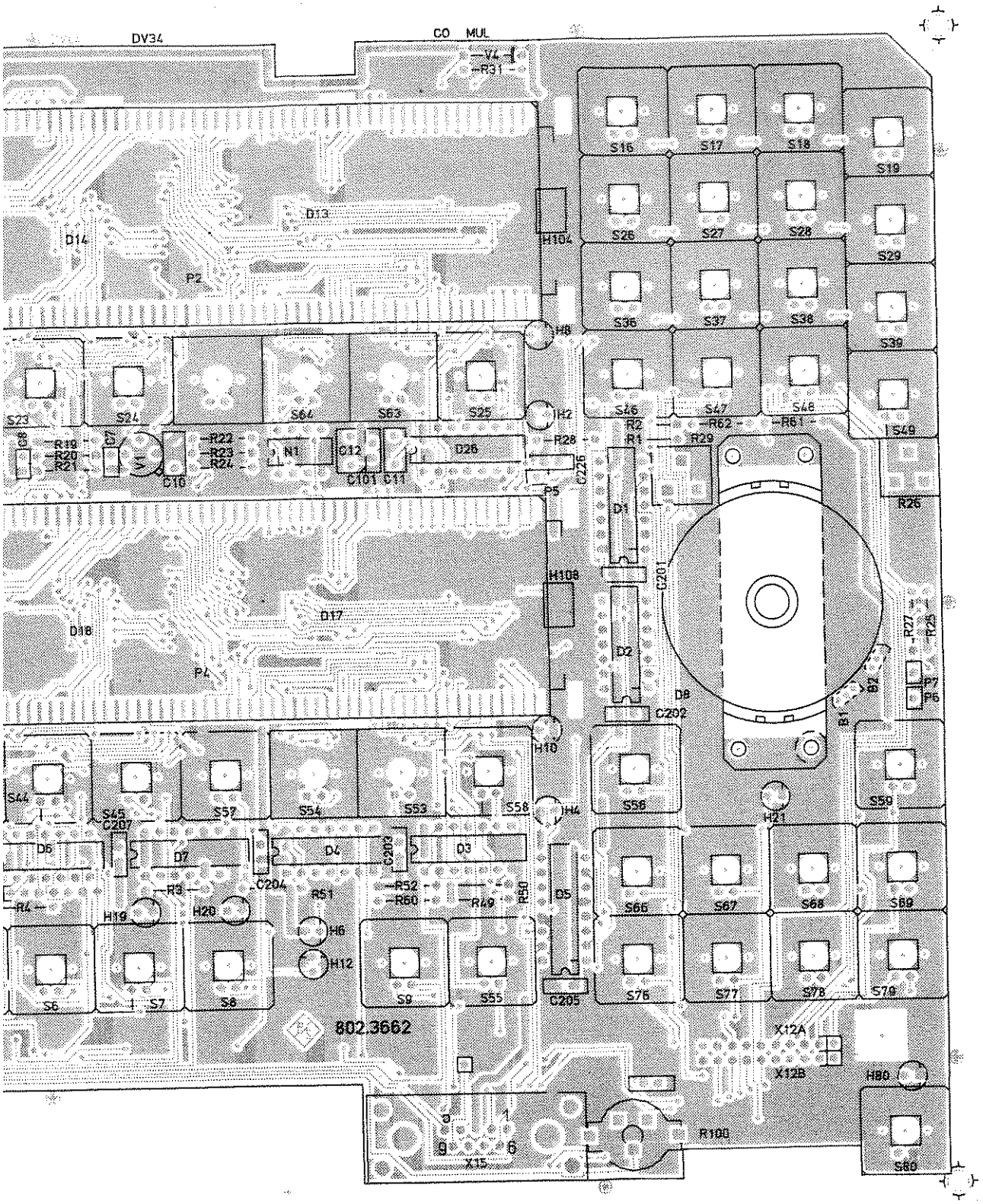

I	32954	03.86	CO

Maße ohne Toleranzangabe

Maßstab 1 : 1

Halbzeug, Werkstoff

1KSA	Tag	Name
Bearb.	03.86	CO
Gepr.		
Norm		

Benennung

Anzeige / Tastatur
Display / Keyboard

ROHDE&SCHWARZ

zu Gerät CMT

Zeichn.-Nr. 802.3662.01 EE

Bla 2

reg. i. V.

erste Z.

Änd. Zust.	Änderungs-Mitteilung	Tag	Name

IB!
gefährdete
lordern eine
habung.
SD!
nsitive
a special

Ansicht und Leitungsfüh
View of tracks on solder

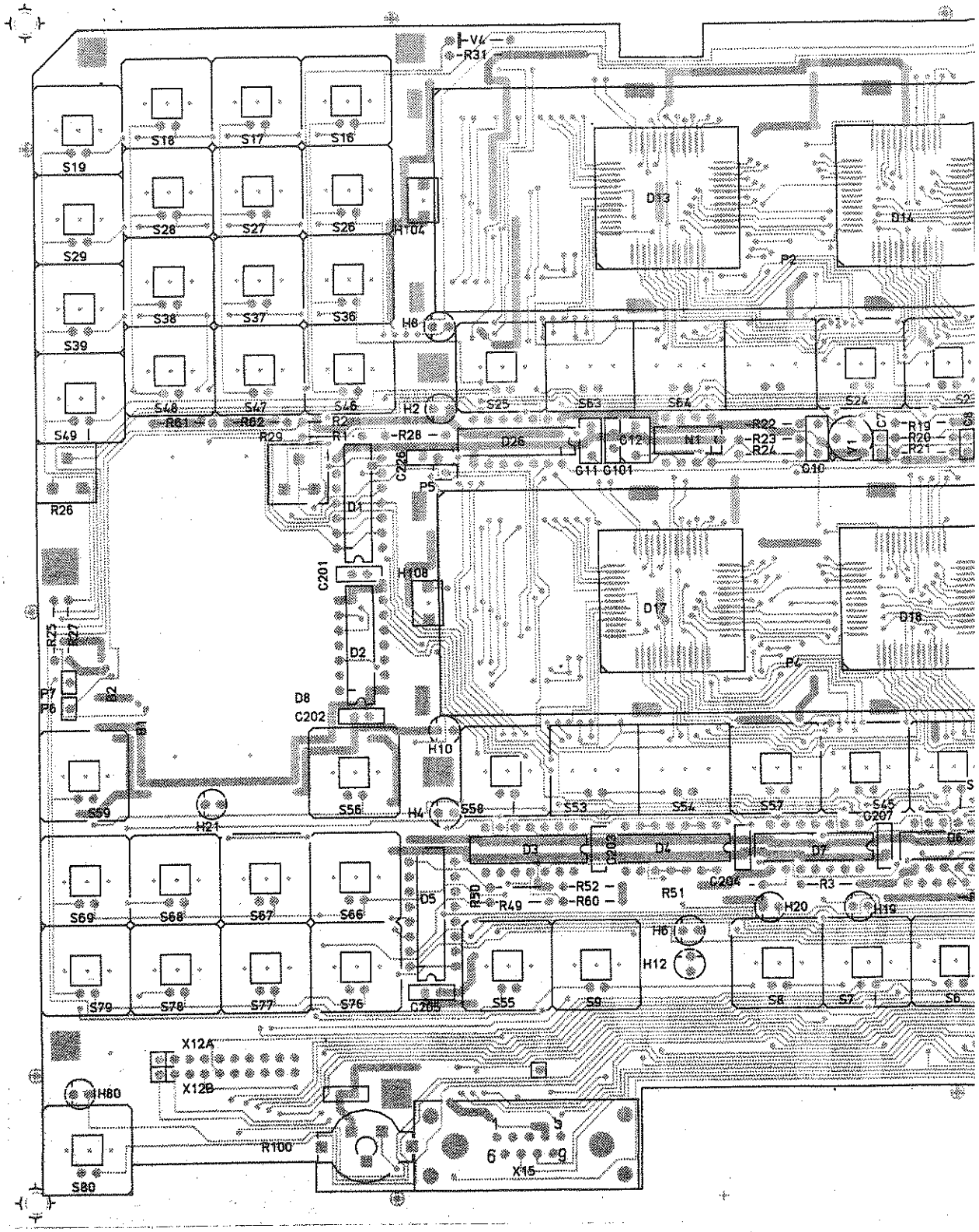

(hierzu HVC 250)

ACHTUNG: EGB!
Elektrostatisch gefährdete Bauelemente erfordern eine besondere Handhabung.

ATTENTION ESD!
Electrostatic sensitive devices require a special handling.

hrung Lötseite
r side

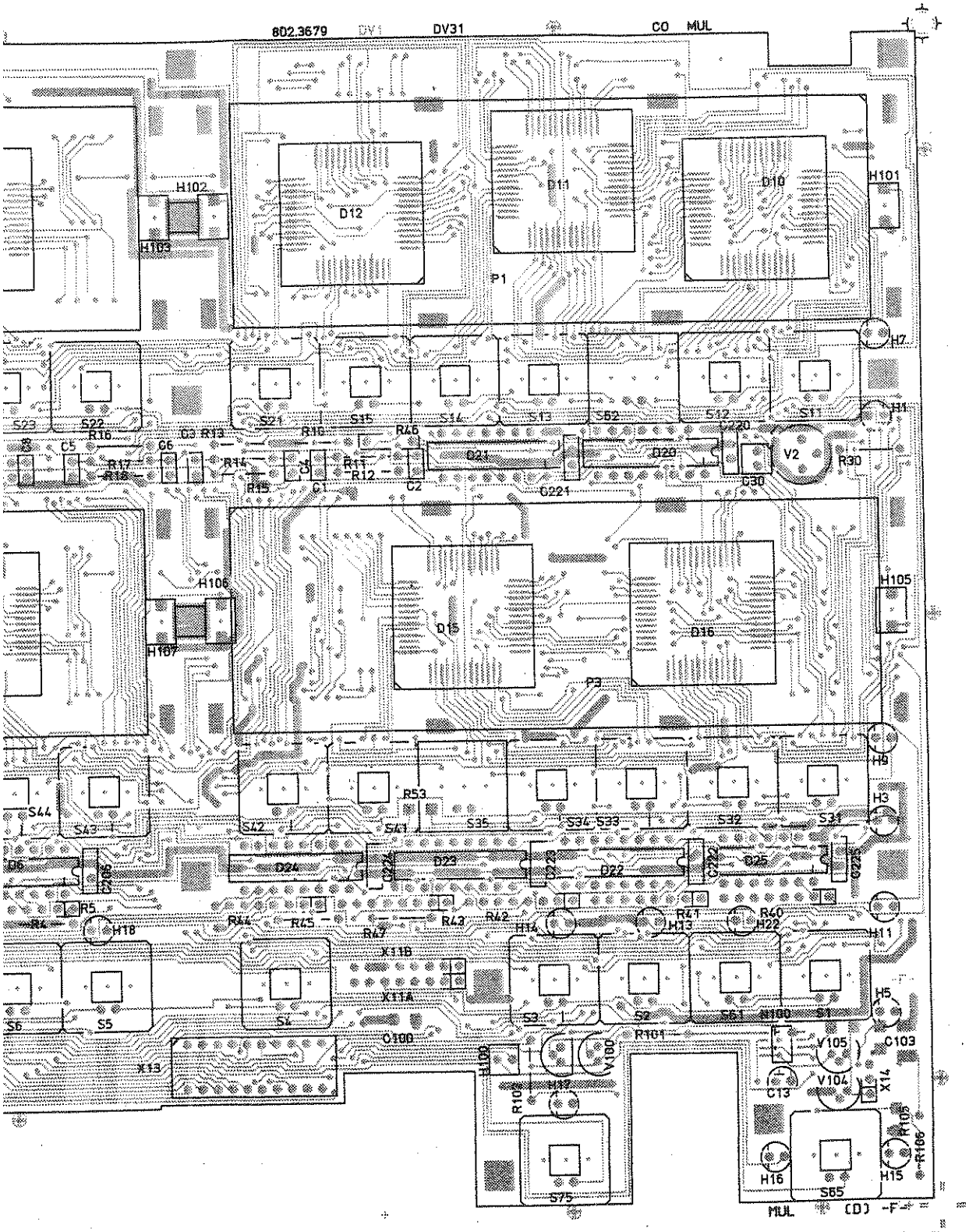

I	32954	03.86	CO	Maße ohne Toleranzangabe	Maßstab 1 : 1	
					Halbzeug, Werkstoff	
				1KSA / Tag / Name	Benennung	Z
				Bearb. 03.86 CO	Anzeige / Tastatur Display / Keyboard	
				Gepr.		
				Norm		
				ROHDE&SCHWARZ	Zeichn.-Nr. 802.3662.01 EE	Blatt-Nr. 3 v. Bl.
Änd. Zust.	Änderungs-Mitteilung	Tag	Name	zu Gerät CMT	reg. i. V. 802.2020 V	erste Z.

rdete
n eine
ng.

e
cial

07 6001 81