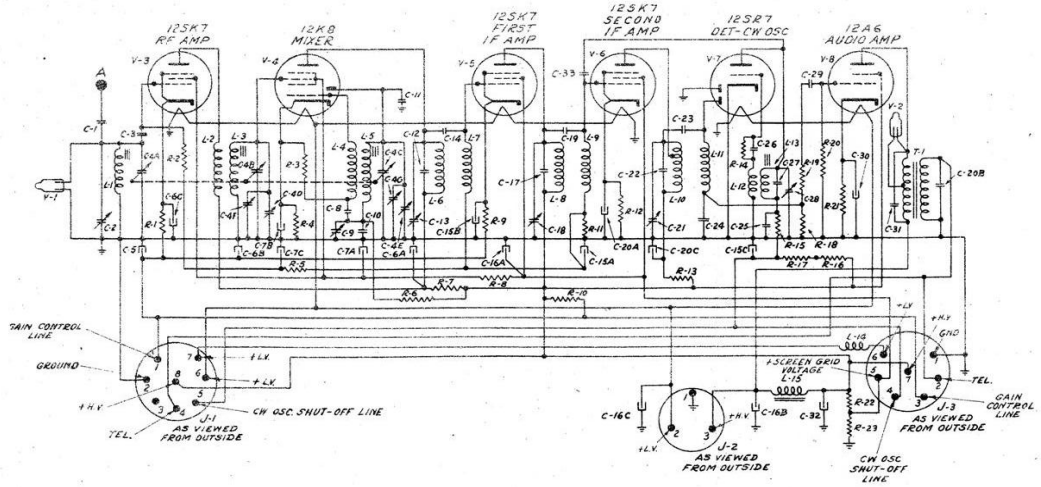

CAPACITANCES		INDUCTANCES		RESISTANCES	
SYMBOL	DESCRIPTION	SYMBOL	DESCRIPTION	SYMBOL	OHMS
C-1	8.5 MMF	L-1	ANT INPUT	R-1	620
C-2	15 MMF	L-2, L-3	RF AMP	R-2	2,000,000
C-3	100 MMF	L-4, L-5	RF OSC	R-3	51,000
C-4(A,B,C)	GANG (62 MMF)	L-6, L-7	IN 1ST IF	R-4	620
C-5	3 MFD	L-8, L-9	IN 2ND IF	R-5	150,000
C-6 (A,B,C)	.05/.05/.05 MFD	L-10, L-11	IN 3RD IF	R-6	150,000
C-7(A,B,C)	.05/.05/.05 MFD	L-12, L-13	CW OSC	R-7	200
C-8	200 MMF	L-14	RF CHOKE,	R-8	200
C-9	40 MMF		112 MICRO-	R-9	620
C-10	240 MMF		HENRIES	R-10	360,000
C-11	3 MMF	L-15	AF CHOKE	R-11	100,000
C-12	180 MMF		3 HENRIES	R-12	510
C-13	17 MMF			R-13	200
C-14	180 MMF			R-14	100,000
C-15(A,B,C)	.05/.05/.05 MFD			R-15	5,100
C-16(A,B,C)	.22/.22/.22 MFD			R-16	51,000
C-17	180 MMF			R-17	51,000
C-18	17 MMF			R-18	510,000
C-19	180 MMF			R-19	100,000
C-20(A,B,C)	.05/.01/.05 MFD			R-20	2,000,000
C-21	17 MMF			R-21	1500
C-22	180 MMF			R-22	7000
C-23	180 MMF			R-23	7000
C-24	200 MMF				
C-25	.001 MFD				
C-26	100 MMF				
C-27	180 MMF				
C-28	34 MMF				
C-29	.006 MFD				
C-30	15 MFD				
C-31	.001 MFD				
C-32	8 MFD				
C-33	WIRING CAPACITANCE (LESS THAN 2 MMF)				

CIRCUITS IN RF COIL SET, IF COUPLING UNITS, CW OSCILLATOR, AND OUTPUT TRANSFORMER. THE TERMINAL NUMBERS ON THESE UNITS AGREE WITH THOSE SHOWN AT THE CORRESPONDING LOCATIONS ON THE WIRING DIAGRAM.

RF COIL SET SYMBOL Z-5

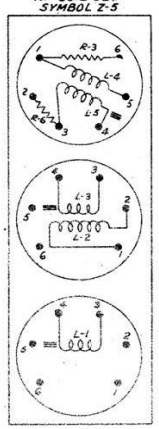

SYMBOL Z-5C RF OSCILLATOR

SYMBOL Z-5B RF AMPLIFIER

SYMBOL Z-5A RF ANTENNA

IF COUPLING UNITS

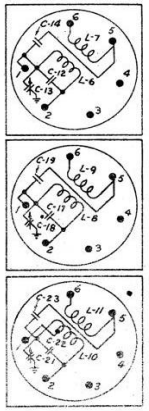

SYMBOL Z-1 1ST IF (2830 KC)

SYMBOL Z-2 2ND IF (2830 KC)

SYMBOL Z-3 3RD IF (2830 KC)

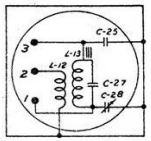

SYMBOL Z-4 CW OSCILLATOR (2830 KC)

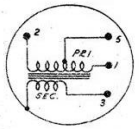

SYMBOL T-1 OUTPUT TRANSFORMER

TUBE SOCKET TERMINALS AS VIEWED FROM BOTTOM

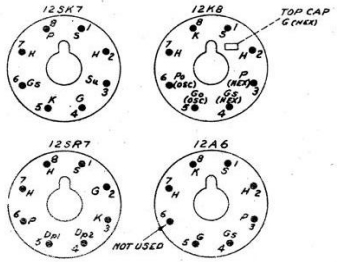

TUBE TERMINAL CODE

S = SHELL
H = HEATER
K = CATHODE
S_4 = SUPPRESSOR GRID
D_{P1} = FIRST DIODE PLATE
D_{P2} = SECOND DIODE PLATE
G = CONTROL GRID
G_S = SCREEN GRID
G_S(HEX) = SCREEN GRID, HEXODE SECTION
G_O(OSC) = CONTROL GRID, OSC SECTION
P = PLATE
P(HEX) = PLATE, HEXODE SECTION
P_O(OSC) = PLATE, OSC. SECTION
G (HEX) = CONTROL GRID, HEXODE SECTION

7810

Fig. 36—Type CBY-46106 Aircraft Radio Receiver (6-9.1 MC) Schematic

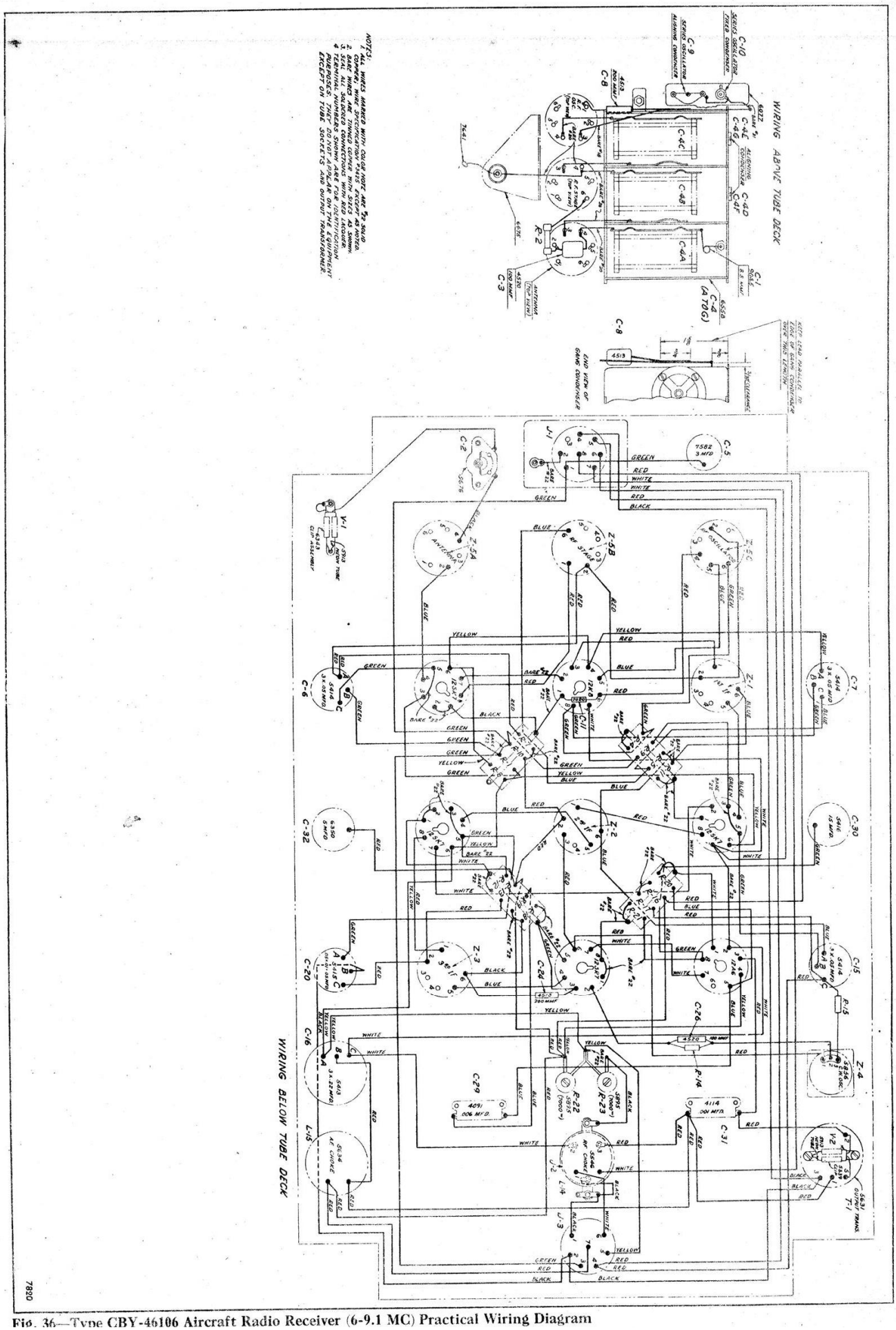

Fig. 36—Type CBY-46106 Aircraft Radio Receiver (6-9.1 MC) Practical Wiring Diagram

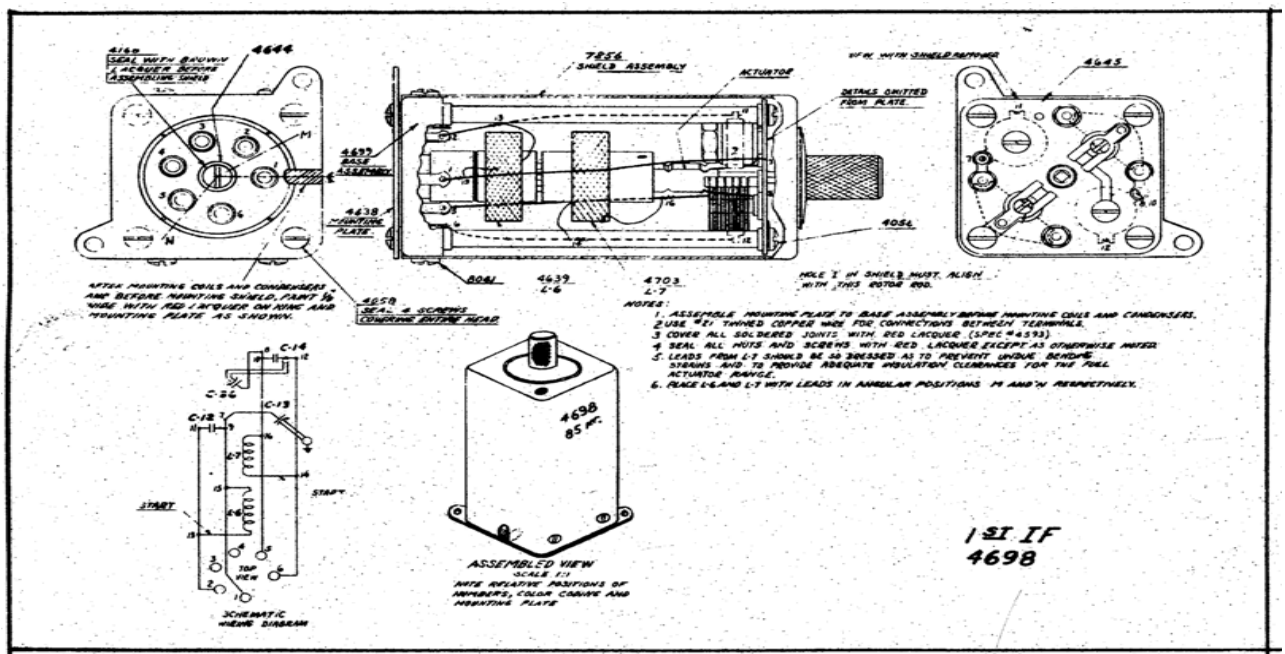
4168 SEAL WITH BAKWIN & LACQUER BEFORE ASSEMBLING SHIELD
4644
7256 SHIELD ASSEMBLY
ACTUATOR
DETAILS OMITTED FROM PLATE
VIEW WITH SHIELD REMOVED
4645
4697 BASE ASSEMBLY
4638 MOUNTING PLATE
4056
8041
4639 L-6
4703 L-7
AFTER MOUNTING COILS AND CONDENSERS AND BEFORE MOUNTING SHIELD, PAINT 1/8" WIRE WITH RED LACQUER ON RING AND MOUNTING PLATE AS SHOWN.
4058 SEAL 4 SCREWS COVERING ENTIRE HEAD
HOLE "I" IN SHIELD MUST ALIGN WITH THIS ROTOR ROD.
NOTES:
1. ASSEMBLE MOUNTING PLATE TO BASE ASSEMBLY BEFORE MOUNTING COILS AND CONDENSERS.
2. USE #21 TINNED COPPER WIRE FOR CONNECTIONS BETWEEN TERMINALS.
3. COVER ALL SOLDERED JOINTS WITH RED LACQUER (SPEC #4593)
4. SEAL ALL NUTS AND SCREWS WITH RED LACQUER EXCEPT AS OTHERWISE NOTED.
5. LEADS FROM L-7 SHOULD BE SO DRESSED AS TO PREVENT UNDUE BENDING STRAINS AND TO PROVIDE ADEQUATE INSULATION CLEARANCES FOR THE FULL ACTUATOR RANGE.
6. PLACE L-6 AND L-7 WITH LEADS IN ANGULAR POSITIONS M AND N RESPECTIVELY.
C-14
C-26
C-12
C-13
L-7
L-6
START
TOP VIEW
SCHEMATIC WIRING DIAGRAM
4698
85 MC.
ASSEMBLED VIEW
SCALE 1:1
NOTE RELATIVE POSITIONS OF NUMBERS, COLOR CODING AND MOUNTING PLATE
1ST IF
4698

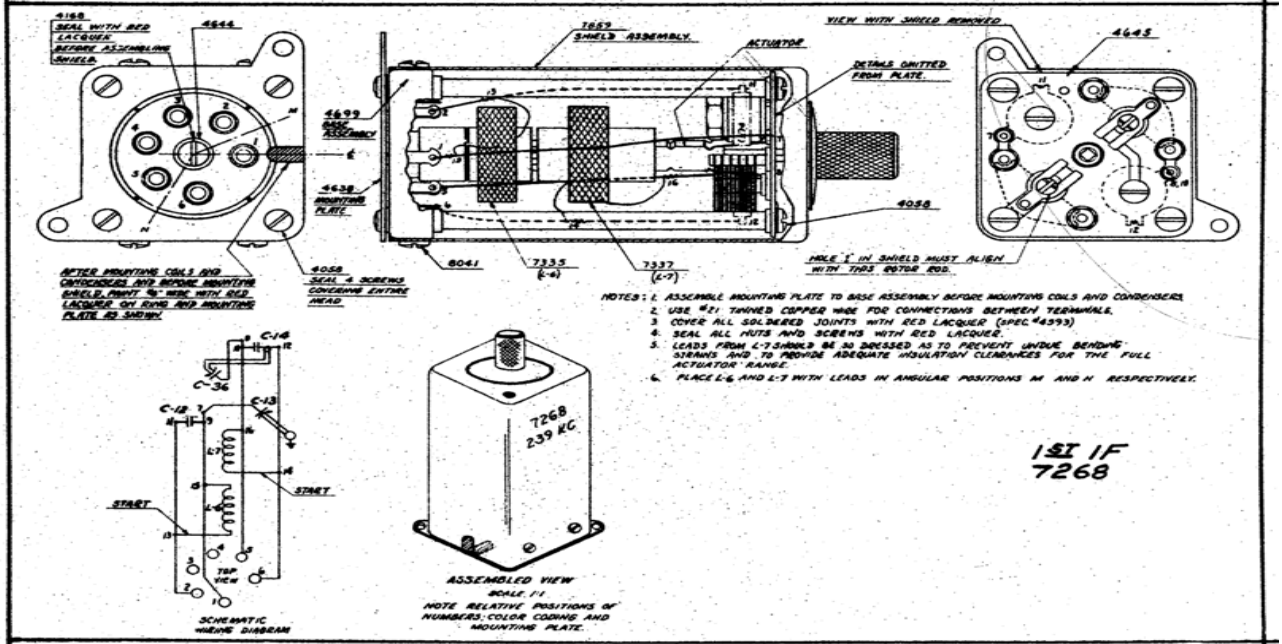
4168 SEAL WITH RED LACQUER BEFORE ASSEMBLING SHIELD.
4644
7269 SHIELD ASSEMBLY
ACTUATOR
DETAILS OMITTED FROM PLATE.
VIEW WITH SHIELD REMOVED
4645
4699 BASE ASSEMBLY
4638 MOUNTING PLATE
4056
8041
7335 (L-6)
7337 (L-7)
AFTER MOUNTING COILS AND CONDENSERS AND BEFORE MOUNTING SHIELD, PAINT 1/8" WIRE WITH RED LACQUER ON RING AND MOUNTING PLATE AS SHOWN.
4058 SEAL 4 SCREWS COVERING ENTIRE HEAD.
HOLE "I" IN SHIELD MUST ALIGN WITH THIS ROTOR ROD.
NOTES: 1. ASSEMBLE MOUNTING PLATE TO BASE ASSEMBLY BEFORE MOUNTING COILS AND CONDENSERS.
2. USE #21 TINNED COPPER WIRE FOR CONNECTIONS BETWEEN TERMINALS.
3. COVER ALL SOLDERED JOINTS WITH RED LACQUER (SPEC #4593)
4. SEAL ALL NUTS AND SCREWS WITH RED LACQUER.
5. LEADS FROM L-7 SHOULD BE SO DRESSED AS TO PREVENT UNDUE BENDING STRAINS AND TO PROVIDE ADEQUATE INSULATION CLEARANCES FOR THE FULL ACTUATOR RANGE.
6. PLACE L-6 AND L-7 WITH LEADS IN ANGULAR POSITIONS M AND N RESPECTIVELY.
C-14
C-36
C-12
C-13
L-7
L-6
START
TOP VIEW
SCHEMATIC WIRING DIAGRAM
7268
239 KC
ASSEMBLED VIEW
SCALE 1:1
NOTE RELATIVE POSITIONS OF NUMBERS; COLOR CODING AND MOUNTING PLATE.
1ST IF
7268

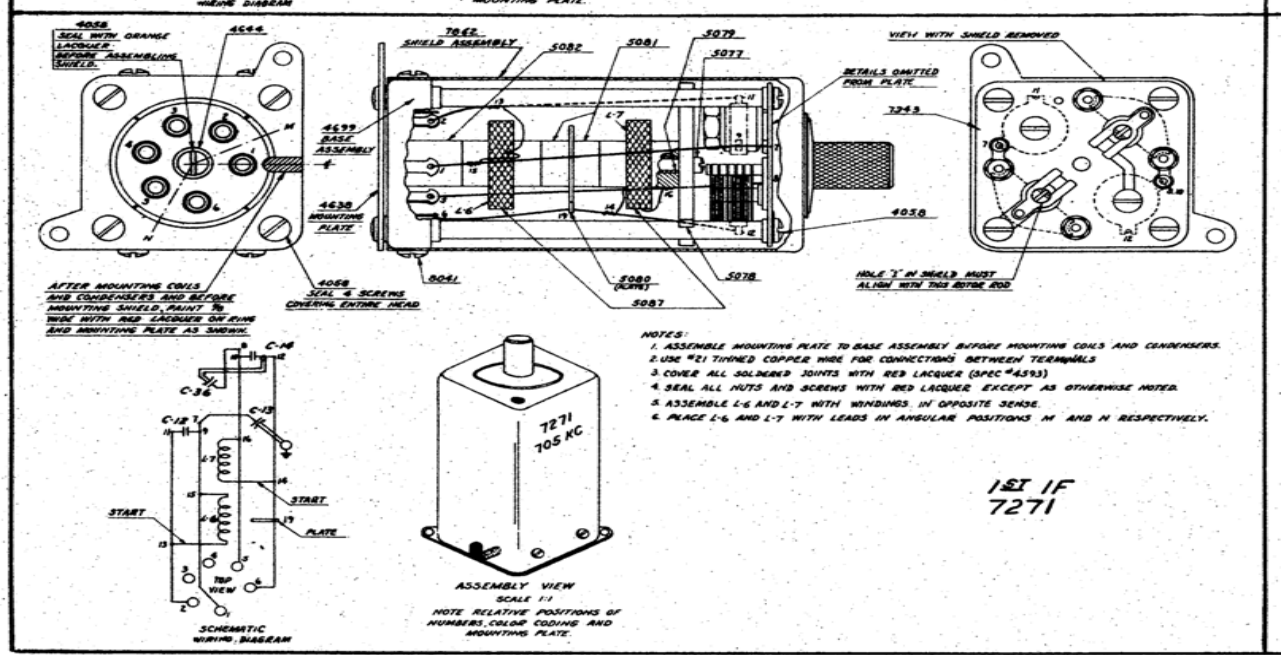
4058 SEAL WITH ORANGE LACQUER BEFORE ASSEMBLING SHIELD.
4644
7262 SHIELD ASSEMBLY
5082
5081
5079
5077
DETAILS OMITTED FROM PLATE
VIEW WITH SHIELD REMOVED
7245
4699 BASE ASSEMBLY
4638 MOUNTING PLATE
L-7
L-6
4056
8041
7080 (SCRIT)
5087
5078
AFTER MOUNTING COILS AND CONDENSERS AND BEFORE MOUNTING SHIELD, PAINT 1/8" WIRE WITH RED LACQUER ON RING AND MOUNTING PLATE AS SHOWN.
4058 SEAL 4 SCREWS COVERING ENTIRE HEAD
HOLE "I" IN SHIELD MUST ALIGN WITH THIS ROTOR ROD
NOTES:
1. ASSEMBLE MOUNTING PLATE TO BASE ASSEMBLY BEFORE MOUNTING COILS AND CONDENSERS.
2. USE #21 TINNED COPPER WIRE FOR CONNECTIONS BETWEEN TERMINALS
3. COVER ALL SOLDERED JOINTS WITH RED LACQUER (SPEC #4593)
4. SEAL ALL NUTS AND SCREWS WITH RED LACQUER EXCEPT AS OTHERWISE NOTED.
5. ASSEMBLE L-6 AND L-7 WITH WINDINGS IN OPPOSITE SENSE.
6. PLACE L-6 AND L-7 WITH LEADS IN ANGULAR POSITIONS M AND N RESPECTIVELY.
C-14
C-36
C-12
C-13
L-7
L-6
START
PLATE
TOP VIEW
SCHEMATIC WIRING DIAGRAM
7271
705 KC
ASSEMBLY VIEW
SCALE 1:1
NOTE RELATIVE POSITIONS OF NUMBERS, COLOR CODING AND MOUNTING PLATE.
1ST IF
7271

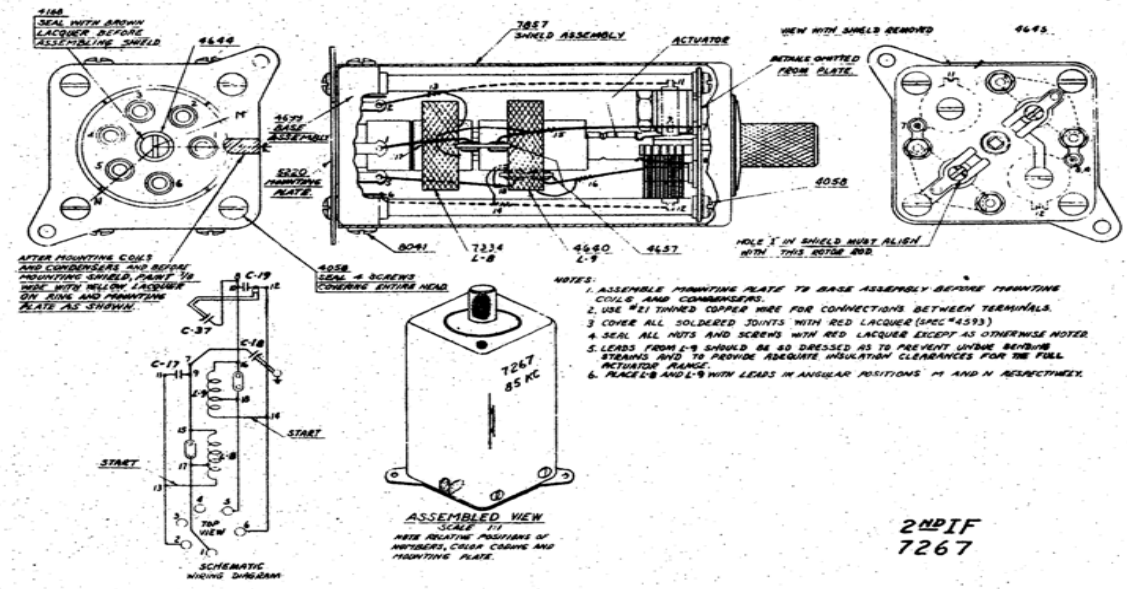

NOTES:

1. ASSEMBLE MOUNTING PLATE TO BASE ASSEMBLY BEFORE MOUNTING COILS AND CONDENSERS.
2. USE #21 TINNED COPPER WIRE FOR CONNECTIONS BETWEEN TERMINALS.
3. COVER ALL SOLDERED JOINTS WITH RED LACQUER (SPEC #4593)
4. SEAL ALL NUTS AND SCREWS WITH RED LACQUER EXCEPT AS OTHERWISE NOTED.
5. LEADS FROM L-9 SHOULD BE SO DRESSED AS TO PREVENT UNDUE BENDING STRAINS AND TO PROVIDE ADEQUATE INSULATION CLEARANCES FOR THE FULL ACTUATOR RANGE.
6. PLACE L-8 AND L-9 WITH LEADS IN ANGULAR POSITIONS M AND N RESPECTIVELY.

2ND IF
7267

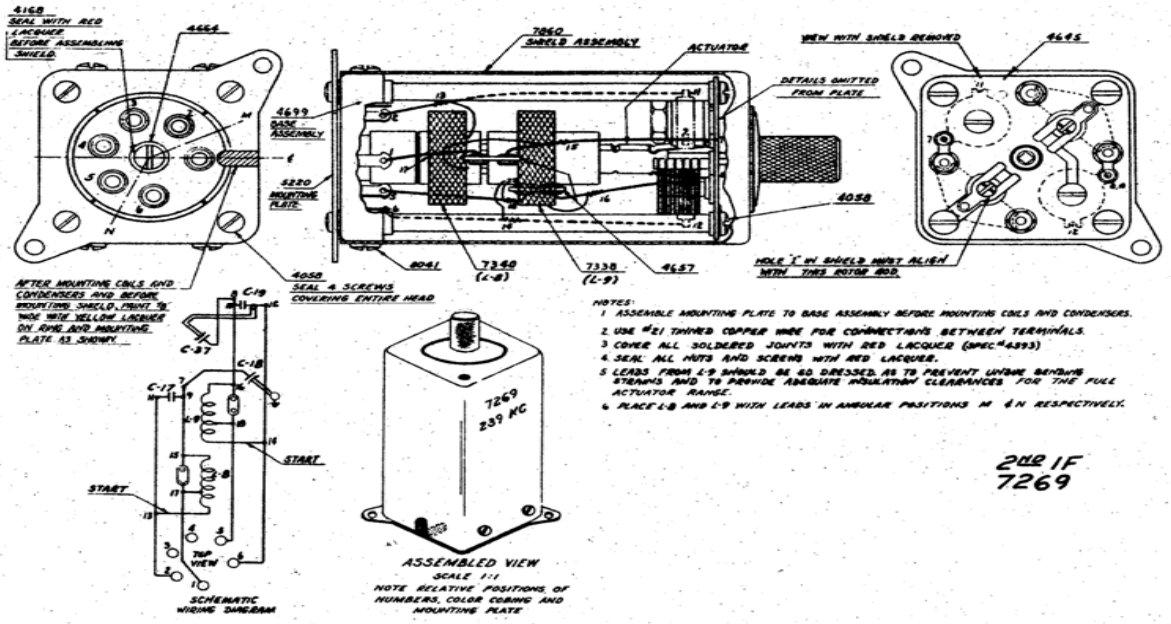

NOTES:

1. ASSEMBLE MOUNTING PLATE TO BASE ASSEMBLY BEFORE MOUNTING COILS AND CONDENSERS.
2. USE #21 TINNED COPPER WIRE FOR CONNECTIONS BETWEEN TERMINALS.
3. COVER ALL SOLDERED JOINTS WITH RED LACQUER (SPEC #4593)
4. SEAL ALL NUTS AND SCREWS WITH RED LACQUER.
5. LEADS FROM L-9 SHOULD BE SO DRESSED AS TO PREVENT UNDUE BENDING STRAINS AND TO PROVIDE ADEQUATE INSULATION CLEARANCES FOR THE FULL ACTUATOR RANGE.
6. PLACE L-8 AND L-9 WITH LEADS IN ANGULAR POSITIONS M & N RESPECTIVELY.

2ND IF
7269

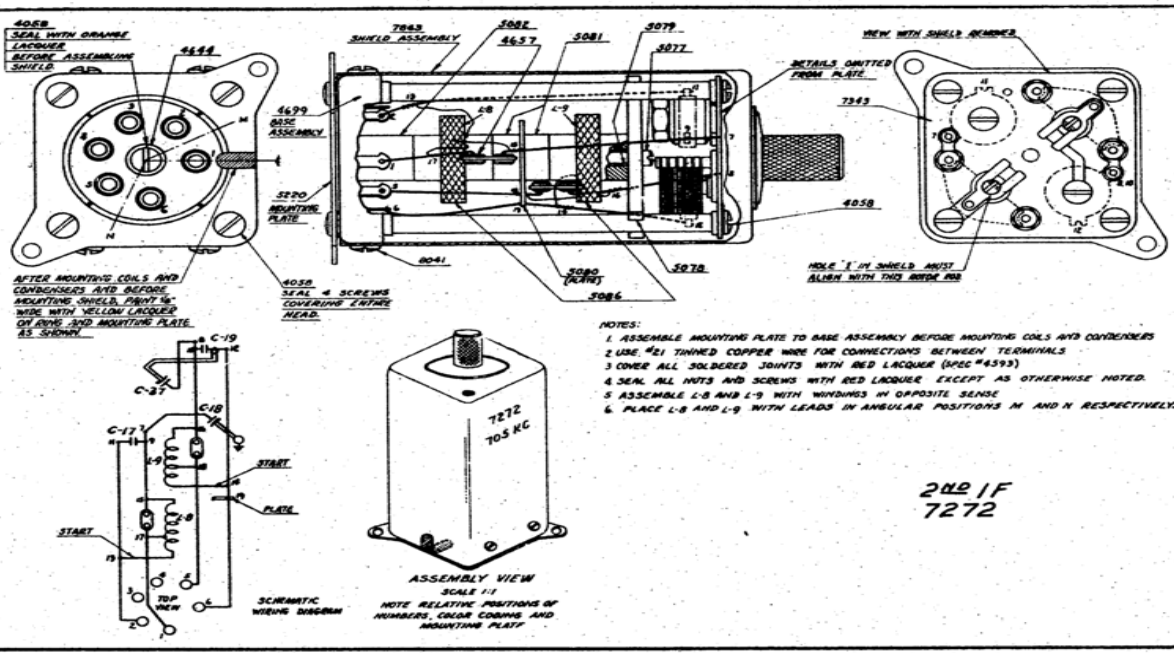

NOTES:

1. ASSEMBLE MOUNTING PLATE TO BASE ASSEMBLY BEFORE MOUNTING COILS AND CONDENSERS
2. USE #21 TINNED COPPER WIRE FOR CONNECTIONS BETWEEN TERMINALS
3. COVER ALL SOLDERED JOINTS WITH RED LACQUER (SPEC #4593)
4. SEAL ALL NUTS AND SCREWS WITH RED LACQUER EXCEPT AS OTHERWISE NOTED.
5. ASSEMBLE L-8 AND L-9 WITH WINDINGS IN OPPOSITE SENSE
6. PLACE L-8 AND L-9 WITH LEADS IN ANGULAR POSITIONS M AND N RESPECTIVELY.

2ND IF
7272

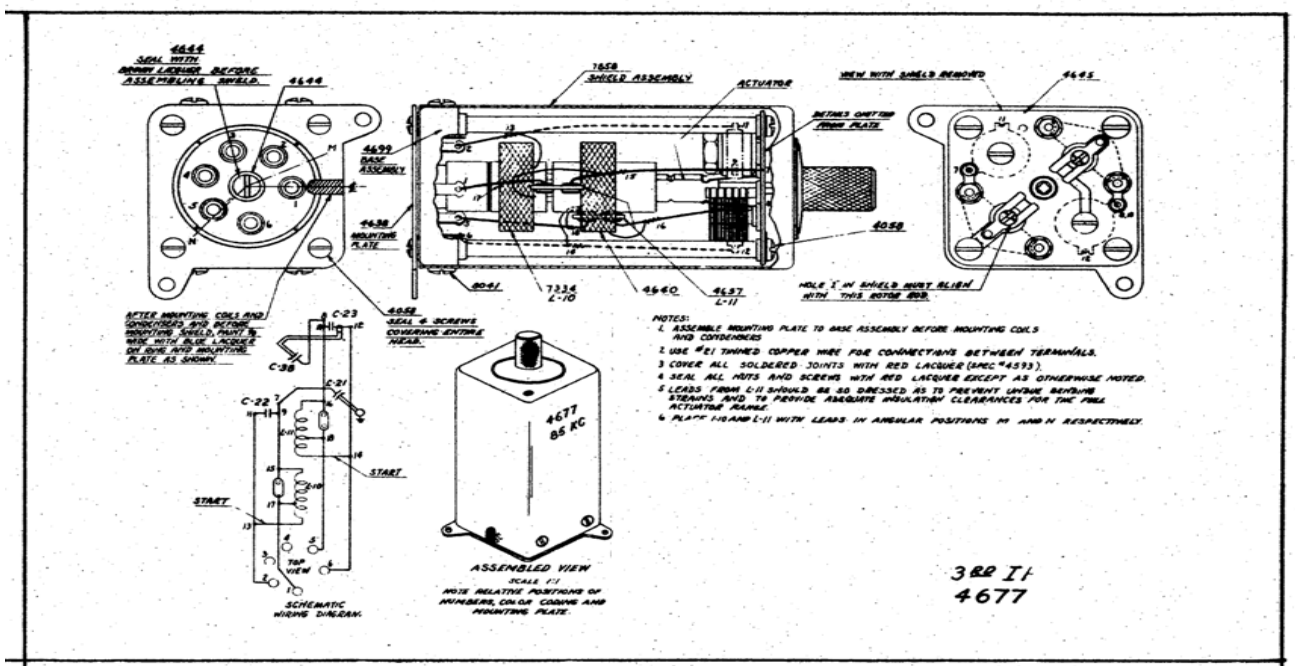

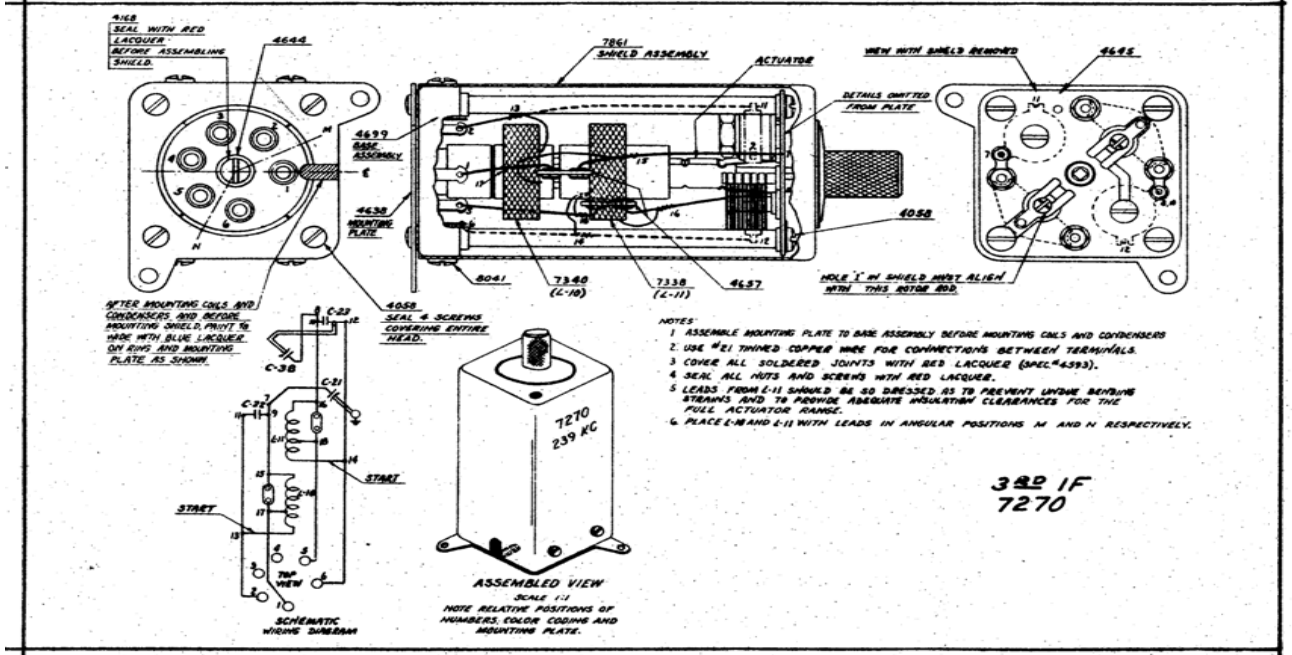

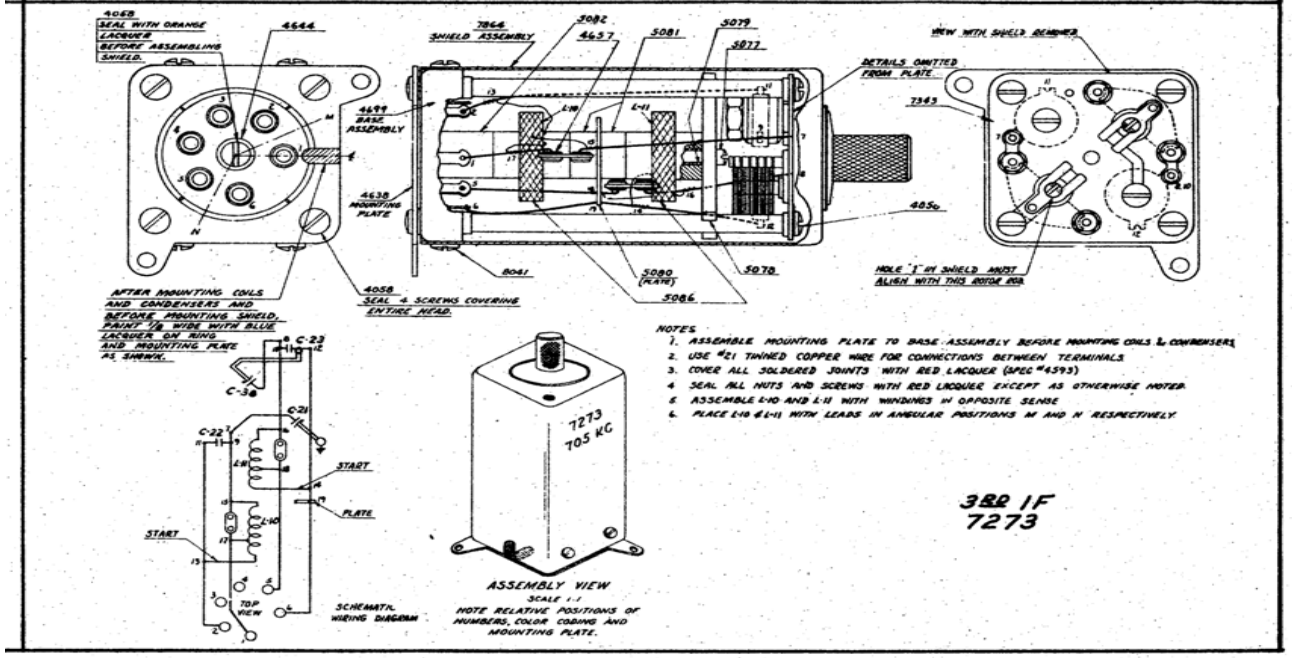

Fig. 37—85 KC, 239 KC, and 705 KC IF Coupling Unit Assemblies

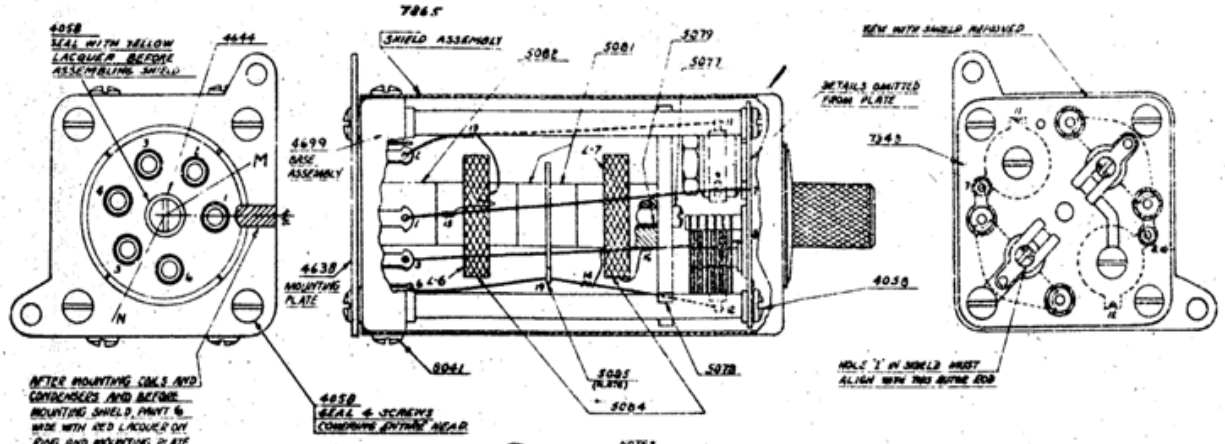

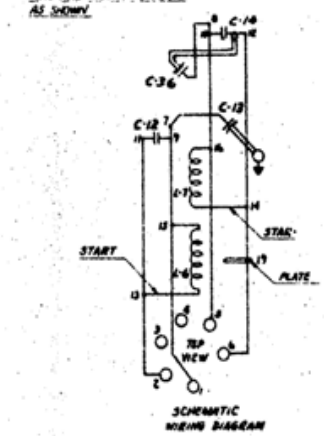

SCHEMATIC WIRING DIAGRAM

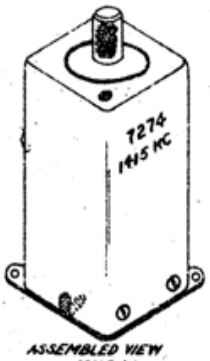

ASSEMBLED VIEW
SCALE 1:1
NOTE RELATIVE POSITIONS OF NUMBERS, COLOR CODING AND MOUNTING PLATE.

NOTES

1. ASSEMBLE MOUNTING PLATE TO BASE ASSEMBLY BEFORE MOUNTING COILS AND CONDENSERS
2. USE #21 TINNED COPPER WIRE FOR CONNECTIONS BETWEEN TERMINALS
3. COVER ALL SOLDERED JOINTS WITH RED LACQUER (SPEC #4593)
4. SEAL ALL NUTS AND SCREWS WITH RED LACQUER EXCEPT AS OTHERWISE NOTED.
5. ASSEMBLE L-6 AND L-7 WITH WINDINGS IN OPPOSITE SENSE.
6. PLACE L-6 AND L-7 WITH LEADS IN ANGULAR POSITIONS 14 AND 14 RESPECTIVELY.

1 ST IF
7274

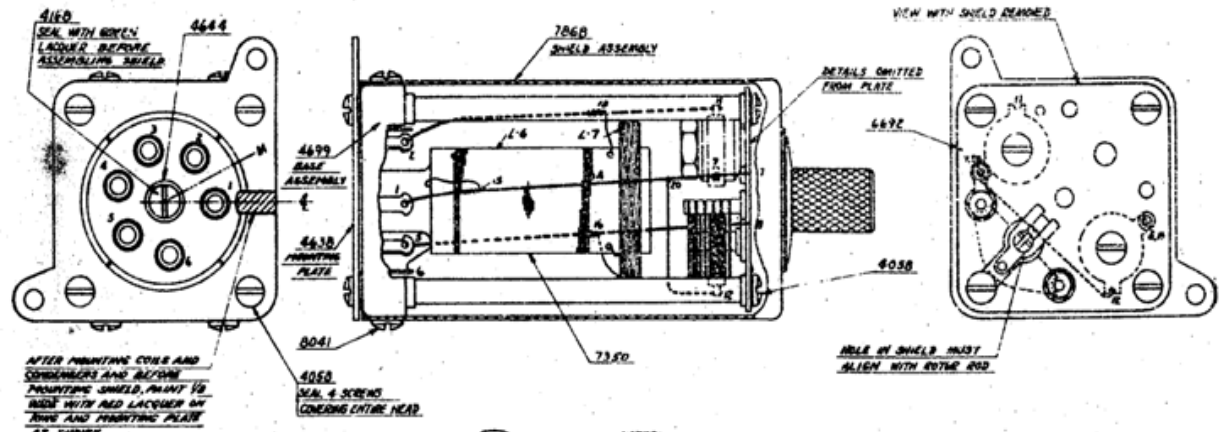

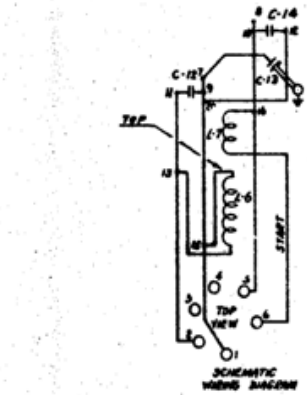

SCHEMATIC WIRING DIAGRAM

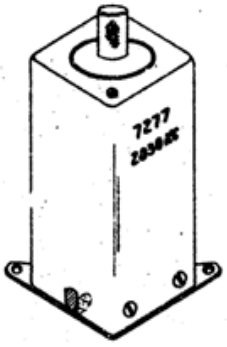

ASSEMBLED VIEW (SCALE 1:1)
NOTE RELATIVE POSITIONS OF NUMBERS, COLOR CODING AND MOUNTING PLATE

NOTES:

1. ASSEMBLE MOUNTING PLATE TO BASE ASSEMBLY BEFORE MOUNTING COILS AND CONDENSERS.
2. USE #21 TINNED COPPER WIRE FOR CONNECTIONS BETWEEN TERMINALS.
3. COVER ALL SOLDERED CONNECTIONS WITH RED LACQUER (SPEC #4593)
4. SEAL ALL NUTS AND SCREWS WITH RED LACQUER EXCEPT AS OTHERWISE NOTED.
6. PLACE HOLE A ON COIL IN ANGULAR POSITION 14

1 ST IF
7277

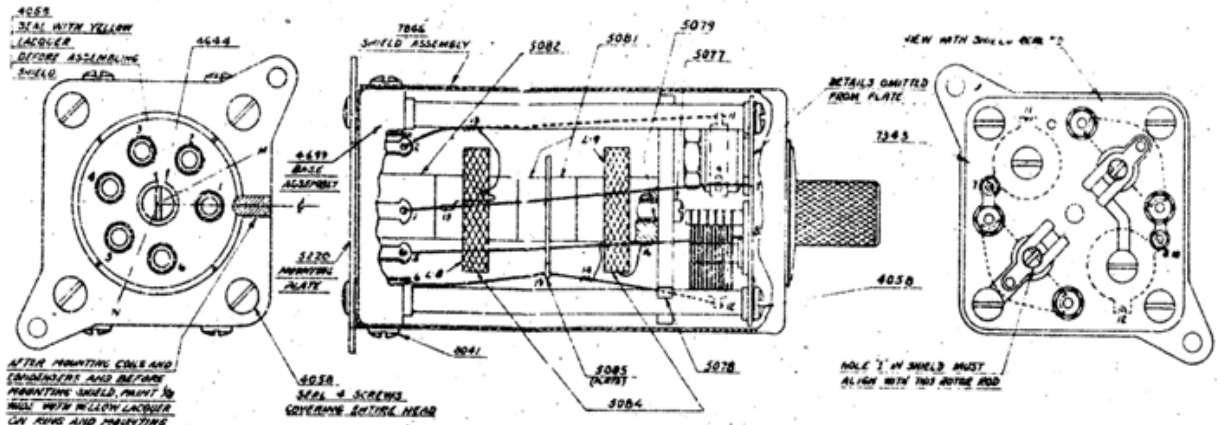

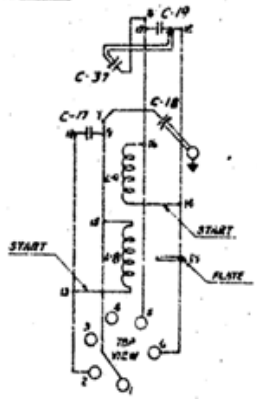

SCHEMATIC WIRING DIAGRAM

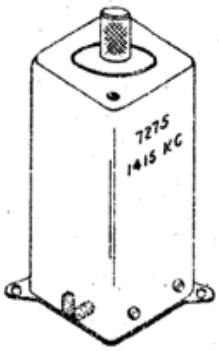

ASSEMBLED VIEW
SCALE 1:1
NOTE RELATIVE POSITIONS OF NUMBERS, COLOR CODING AND MOUNTING PLATE

NOTES

1. ASSEMBLE MOUNTING PLATE TO BASE ASSEMBLY BEFORE MOUNTING COILS AND CONDENSERS.
2. USE #21 TINNED COPPER WIRE FOR CONNECTIONS BETWEEN TERMINALS
3. COVER ALL SOLDERED JOINTS WITH RED LACQUER (SPEC #4593).
4. SEAL ALL NUTS AND SCREWS WITH RED LACQUER EXCEPT AS OTHERWISE NOTED
5. ASSEMBLE L-8 AND L-9 WITH WINDINGS IN OPPOSITE SENSE
6. PLACE L-8 AND L-9 WITH LEADS IN ANGULAR POSITIONS M AND N RESPECTIVELY.

2ND IF
7275

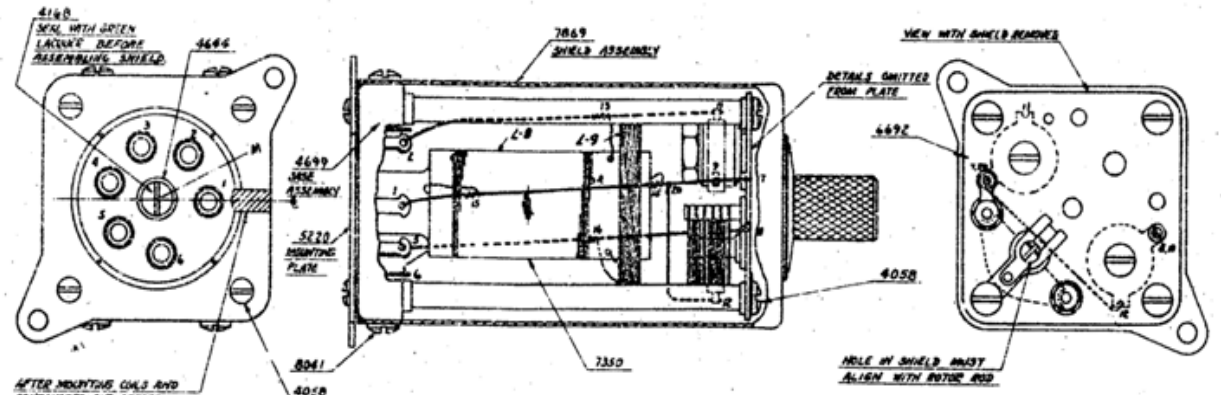

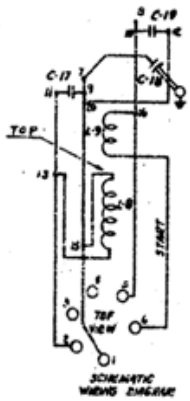

SCHEMATIC WIRING DIAGRAM

ASSEMBLED VIEW (SCALE 1:1)
NOTE RELATIVE POSITIONS OF NUMBERS, COLOR CODING AND MOUNTING PLATE

NOTES

1. ASSEMBLE MOUNTING PLATE TO BASE ASSEMBLY BEFORE MOUNTING COILS AND CONDENSERS
2. USE #21 TINNED COPPER WIRE FOR CONNECTIONS BETWEEN TERMINALS.
3. COVER ALL SOLDERED CONNECTIONS WITH RED LACQUER (SPEC #4593)
4. SEAL ALL NUTS AND SCREWS WITH RED LACQUER EXCEPT AS OTHERWISE NOTED
5. PLACE HOLE A ON COIL IN ANGULAR POSITION M.

2ND IF
7278

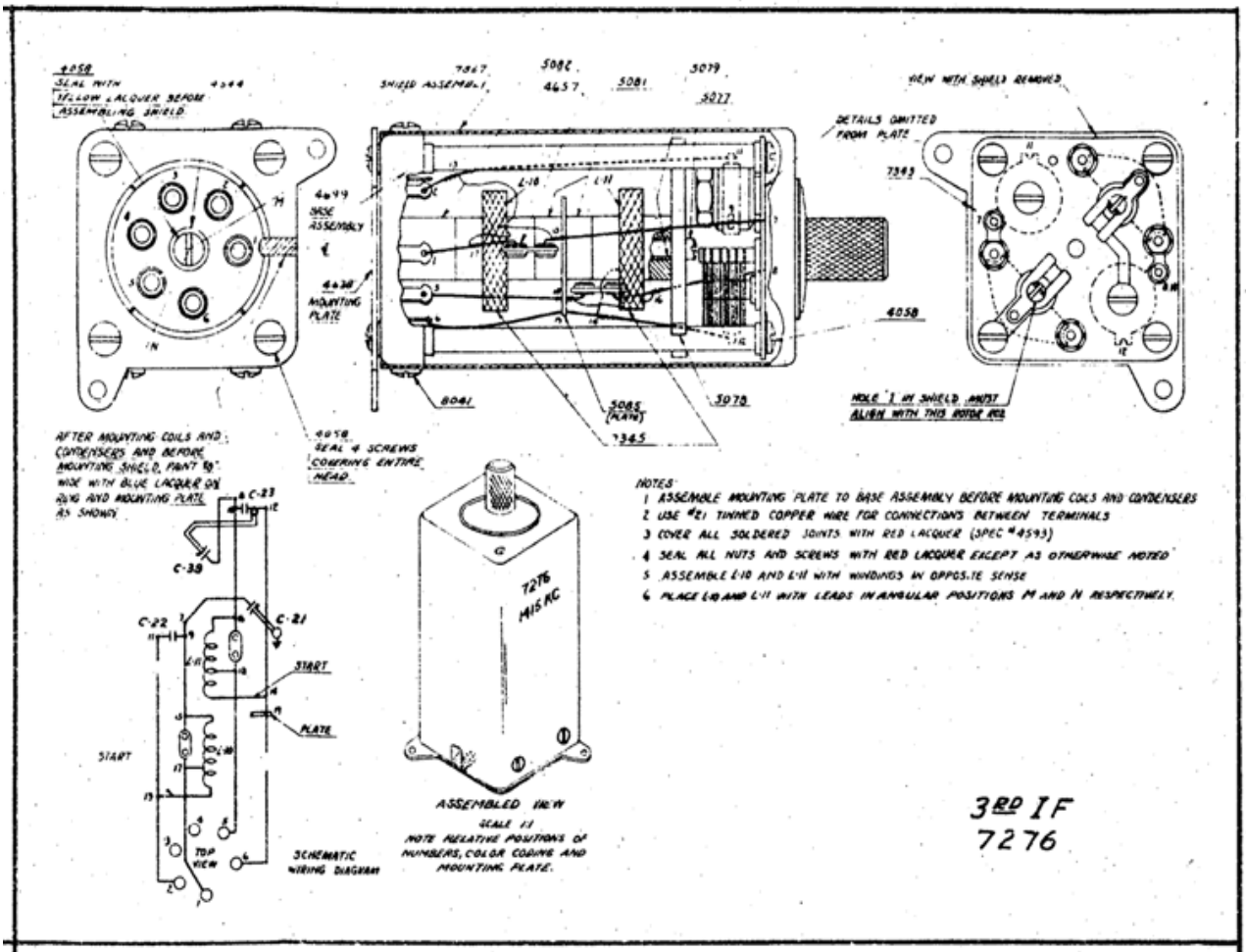

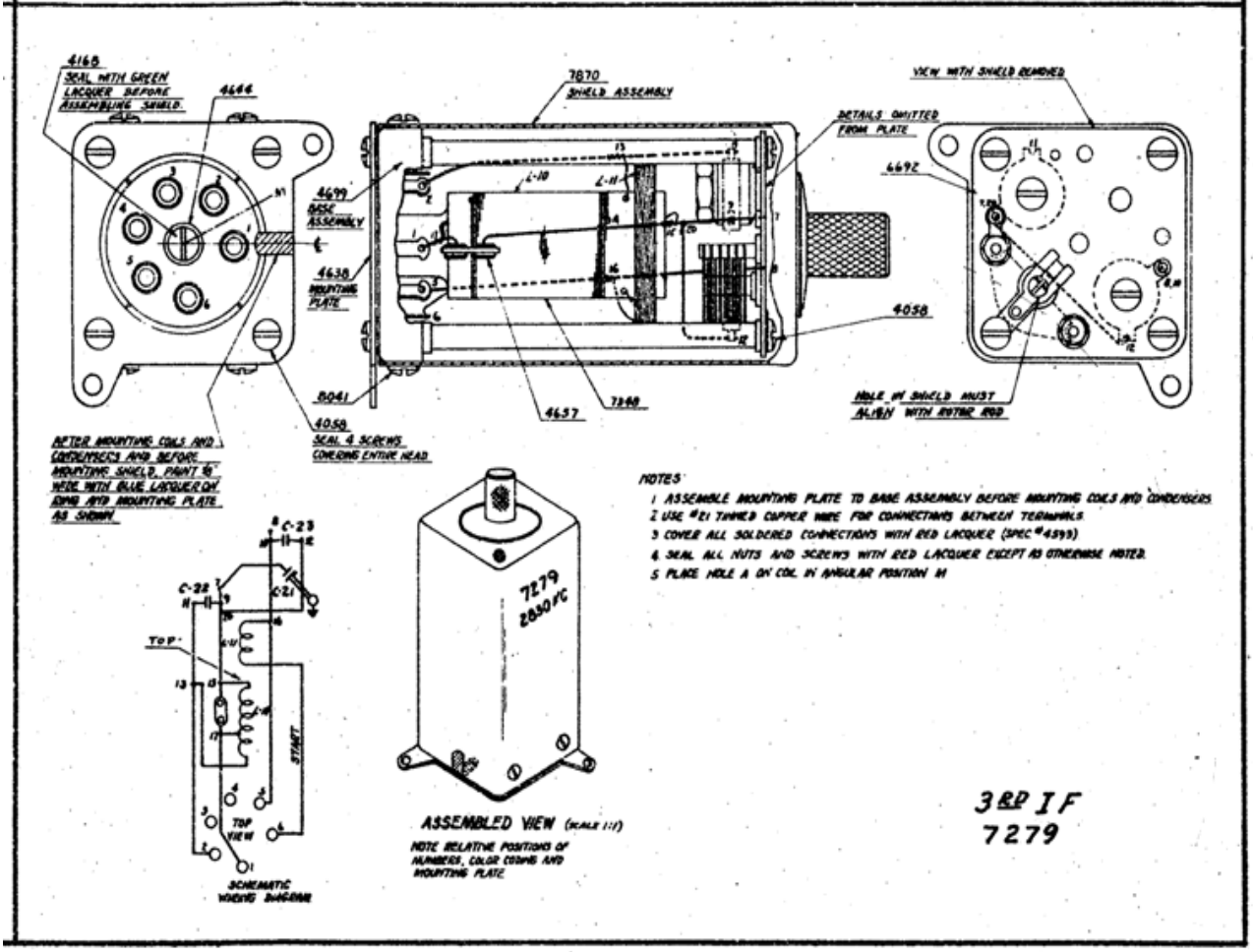

Fig. 38—1415 KC and 2830 KC IF Coupling Unit Assemblies

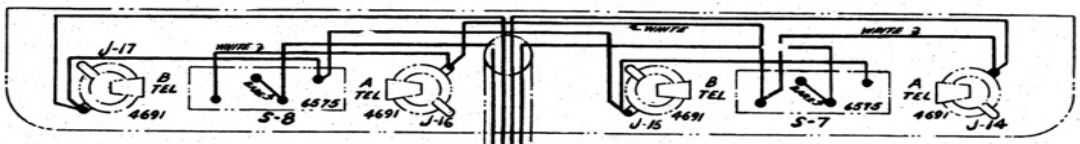

REAR VIEW OF FRONT CHANNEL

NOTES:

1. ALL WIRES MARKED (#) TO BE #18 STRANDED COPPER (SPEC. #3423).
2. ALL BARE WIRES TO BE #22 TINNED COPPER.
3. ALL OTHER WIRES TO BE #22 SOLID COPPER (SPEC. #3425).
4. ALL WIRES TO BE BLACK EXCEPT AS OTHERWISE INDICATED.
5. SEAL ALL SOLDERED JOINTS WITH RED LACQUER (SPEC. #4393)
6. BIND LEADS IN GROUPS WHERE REQUIRED FOR MECHANICAL STABILITY.

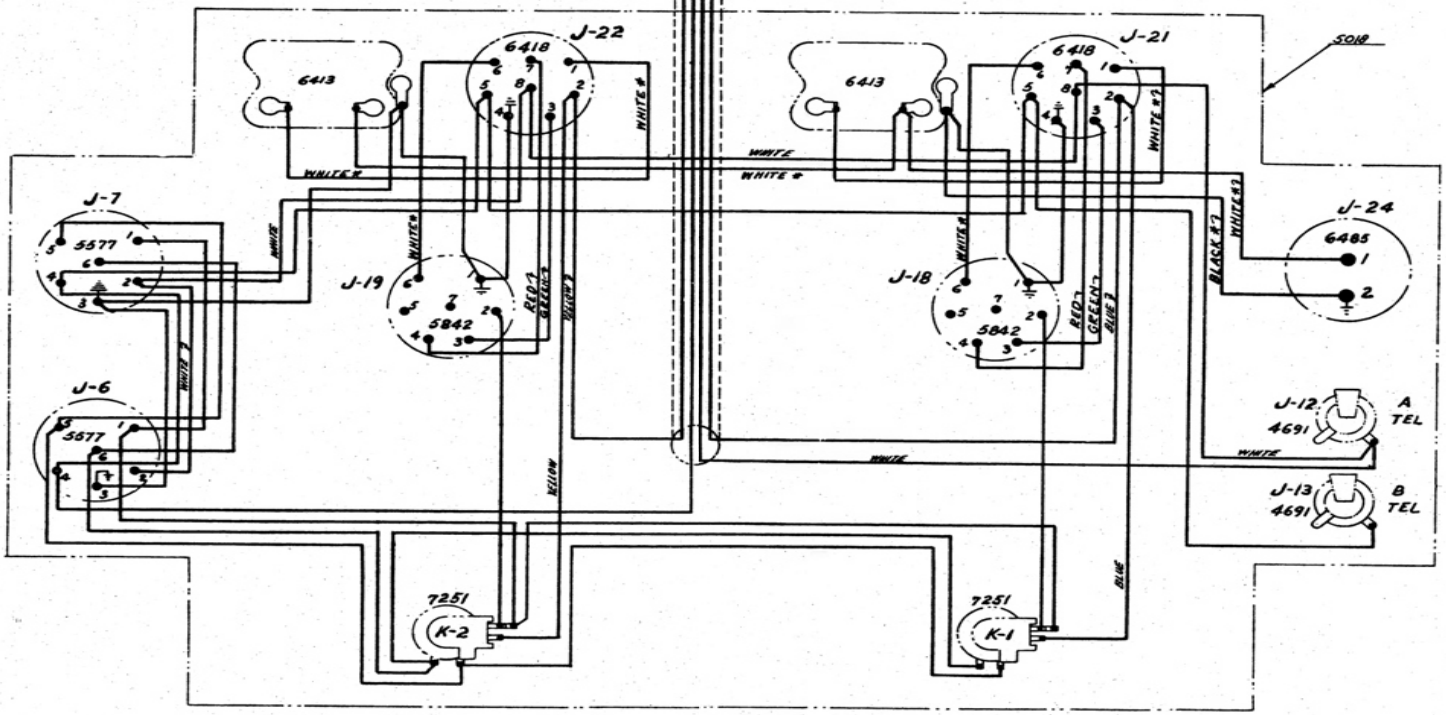

REAR VIEW OF COUPLING BOX
TYPE CBY-46110 RECEIVER RACK
(2 UNIT)

NOTES:

1. ALL WIRES MARKED (*) TO BE #18 STRANDED COPPER (SPEC. #3423).
2. ALL BARE WIRES TO BE #22 TINNED COPPER.
3. ALL OTHER WIRES TO BE #22 SOLID COPPER (SPEC. #3425).
4. ALL WIRES TO BE BLACK EXCEPT AS OTHERWISE INDICATED.
5. SEAL ALL SOLDERED JOINTS WITH RED LACQUER (SPEC. #4599).
6. BIND LEADS IN GROUPS WHERE REQUIRED FOR MECHANICAL STABILITY.

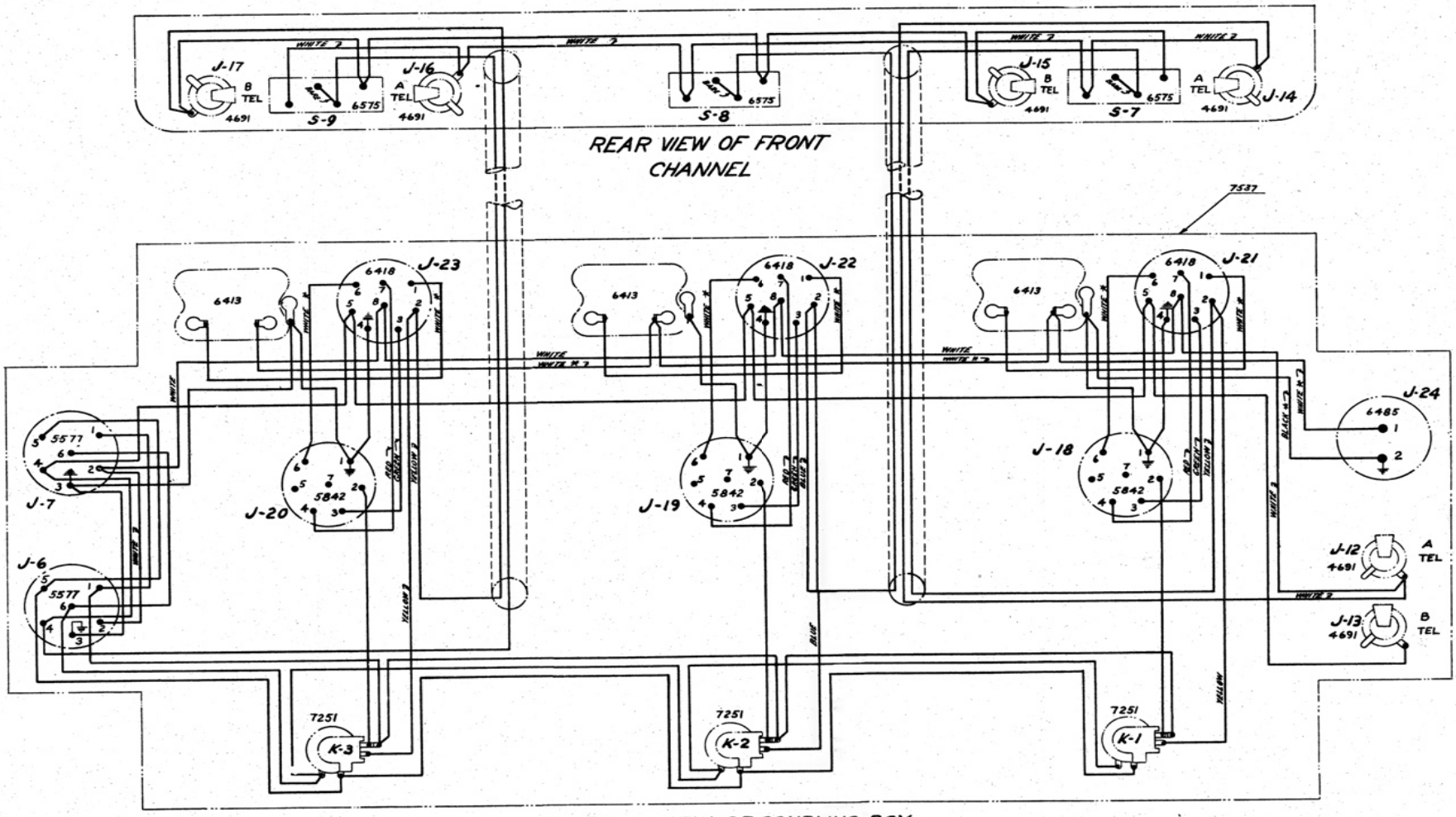

REAR VIEW OF COUPLING BOX
TYPE CBY-46149 RECEIVER RACK
(3 UNIT)

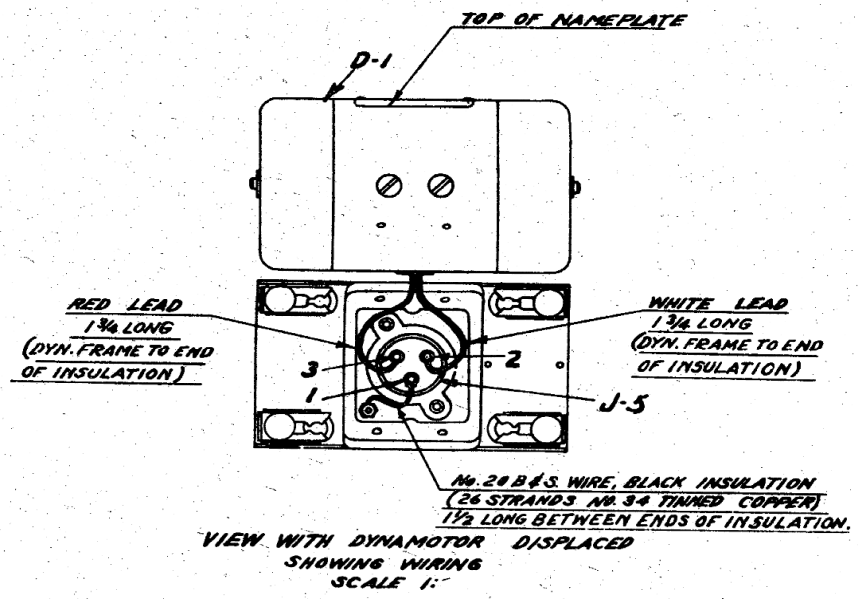

VIEW WITH DYNAMOTOR DISPLACED
SHOWING WIRING
SCALE 1:

NOTES:
1. KEEP LEAD INSULATION CLOSE TO TERMINALS. PAINT BETWEEN ENDS OF LEAD INSULATION AND TERMINALS WITH THICK RED LACQUER FOR REENFORCEMENT.
2. TOPS OF TERMINALS MUST BE FREE FROM SHARP METALLIC POINTS.
3. TERMINAL NUMBERS SHOWN ARE FOR IDENTIFICATION PURPOSES. THEY DO NOT APPEAR ON THE UNIT.

TYPE CBY-21531
RECEIVER DYNAMOTOR UNIT

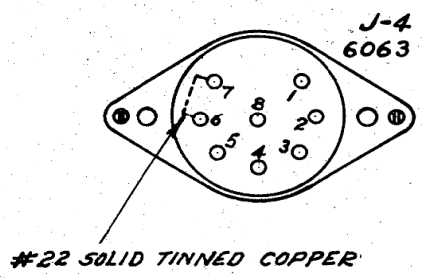

VIEW FROM REAR OF UNIT

NOTES:
1. SEAL ALL SOLDERED CONNECTIONS WITH RED LACQUER (SPEC. #4593)

TYPE CBY-49107
SWITCH PANEL ADAPTER

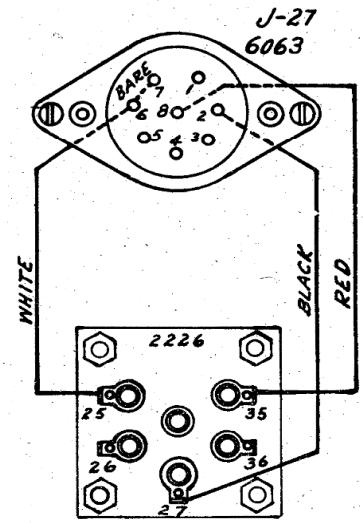

VIEW FROM REAR OF UNIT

NOTES:
1. ALL WIRES MARKED WITH COLOR NOTE ARE #22 SOLID COPPER (SPEC. #3425)
2. BARE WIRES IS #22 SOLID TINNED COPPER.
3. SEAL ALL SOLDERED CONNECTIONS WITH RED LACQUER (SPEC. #4593)

TYPE CBY-62036
AUXILIARY OUTLET ADAPTER

9069

Fig. 39—Type CBY-46110 Receiver Rack (2-unit), Type CBY-46149 Receiver Rack (3-unit), Type CBY-21531 Receiver Dynamotor Unit, Type CBY-49107 Switch Panel Adapter, Type CBY-62036 Auxiliary Outlet Adapter, Practical Wiring Diagrams

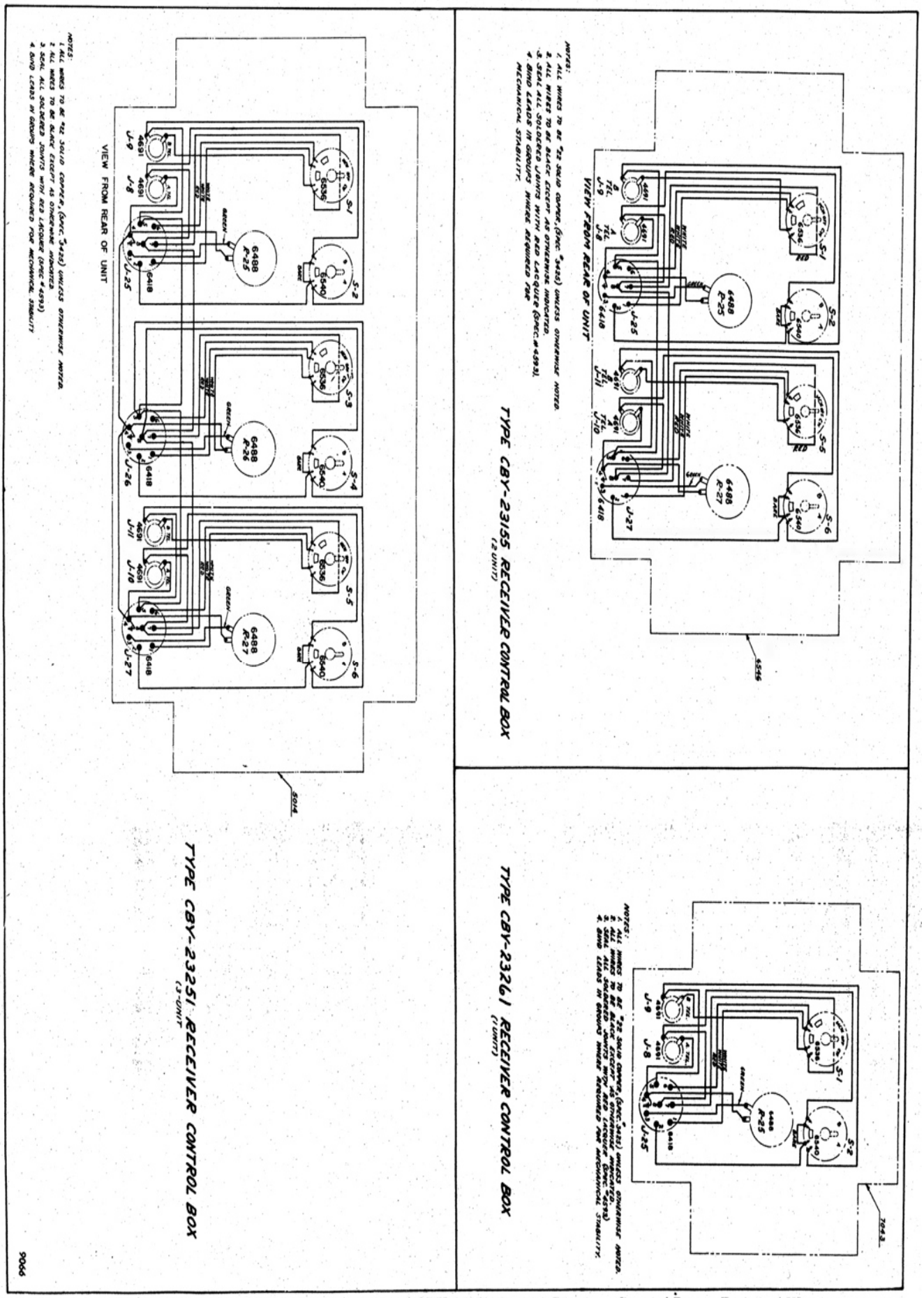

Fig. 40—Type CBY-23261 (1-unit), CBY-23155 (2-unit), and CBY-23251 (3-unit) Receiver Control Boxes, Practical Wiring Diagrams

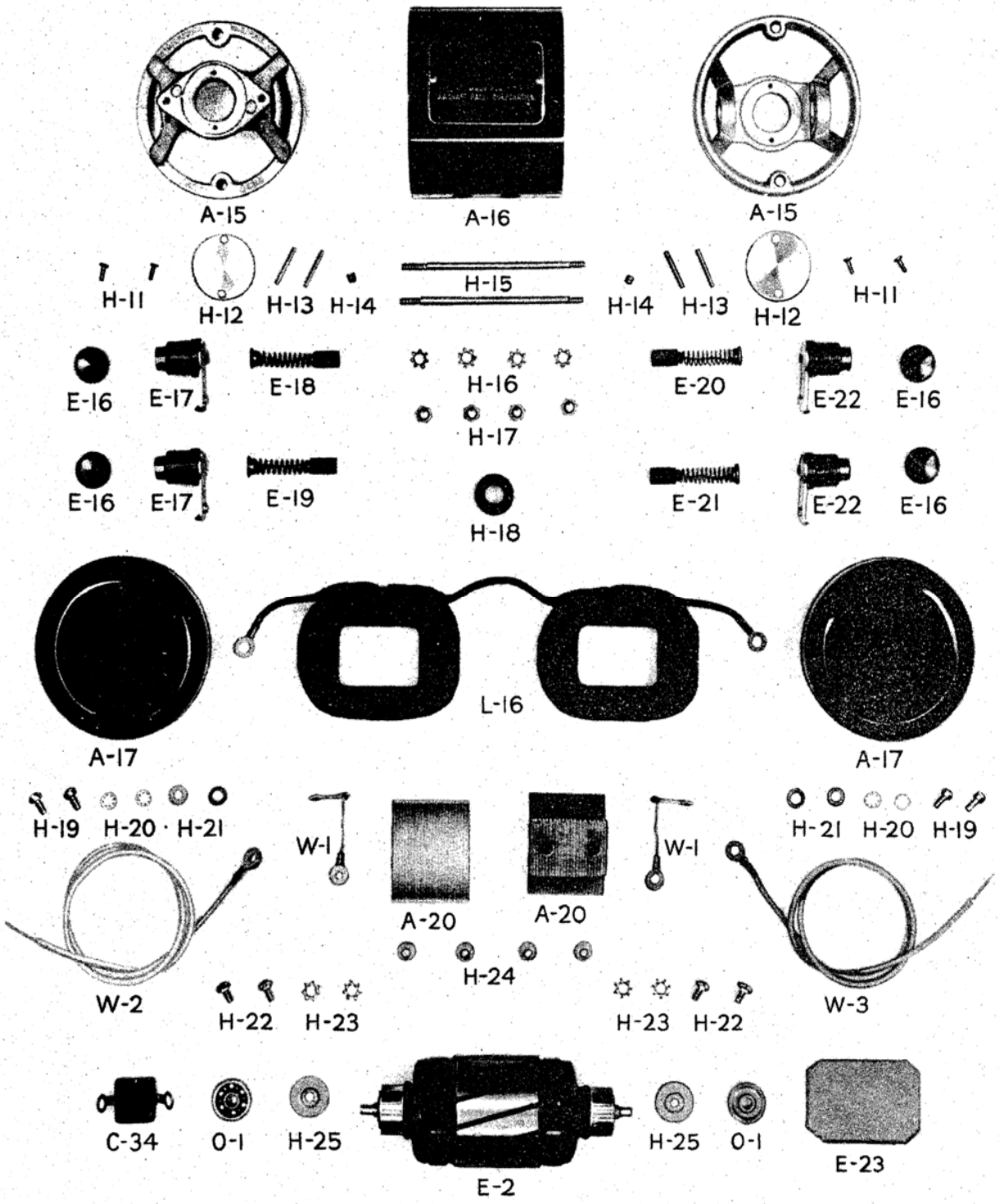
A-15
A-16
A-15
H-11
H-12
H-13
H-14
H-15
H-14
H-13
H-12
H-11
E-16
E-17
E-18
H-16
E-20
E-22
E-16
H-17
E-16
E-17
E-19
H-18
E-21
E-22
E-16
A-17
L-16
A-17
H-19
H-20
H-21
W-1
A-20
A-20
W-1
H-21
H-20
H-19
W-2
H-24
W-3
H-22
H-23
H-23
H-22
C-34
O-1
H-25
H-25
O-1
E-23
E-2

7841

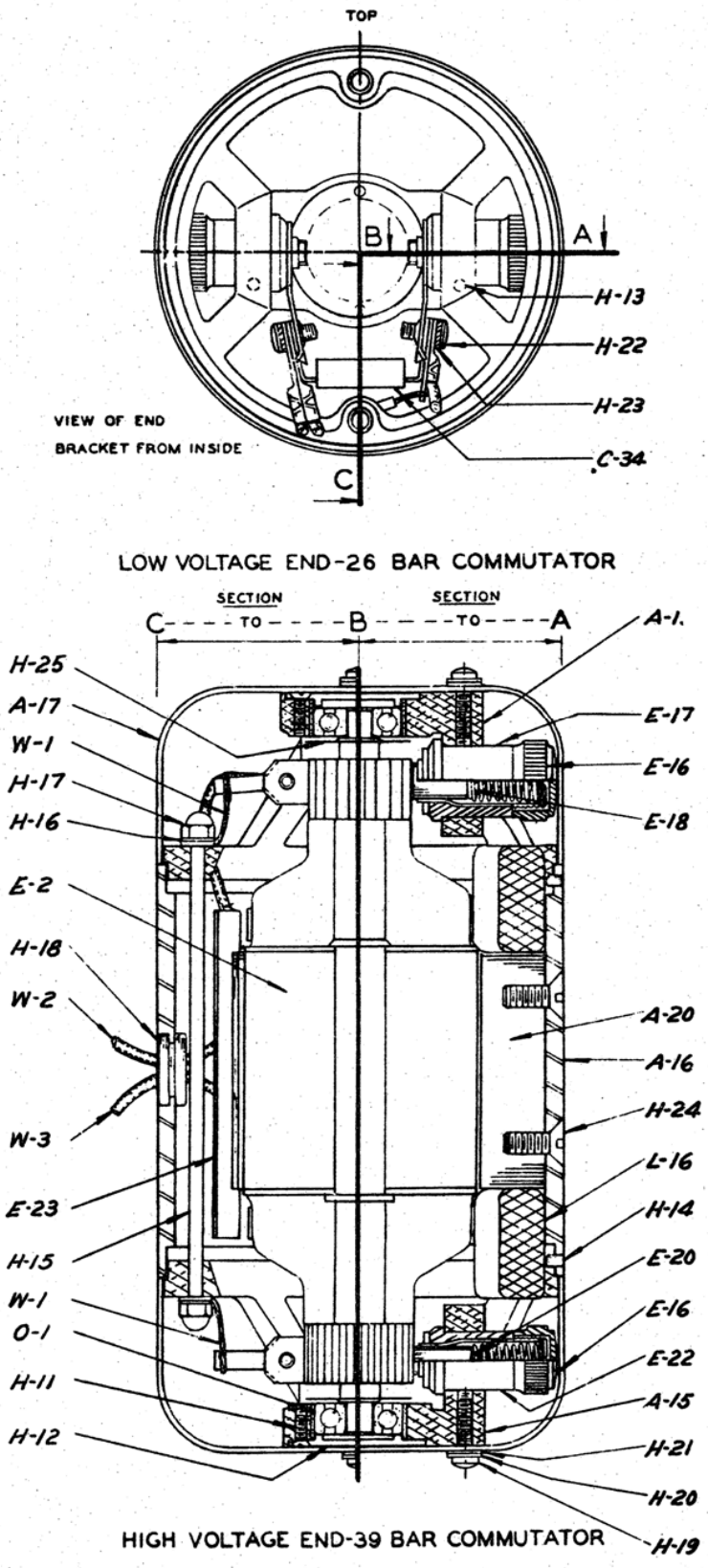

Fig. 41—Photograph of Parts, and Line Drawing of Dynamotor Machine Used in Type CBY-21531 Receiver Dynamotor Unit

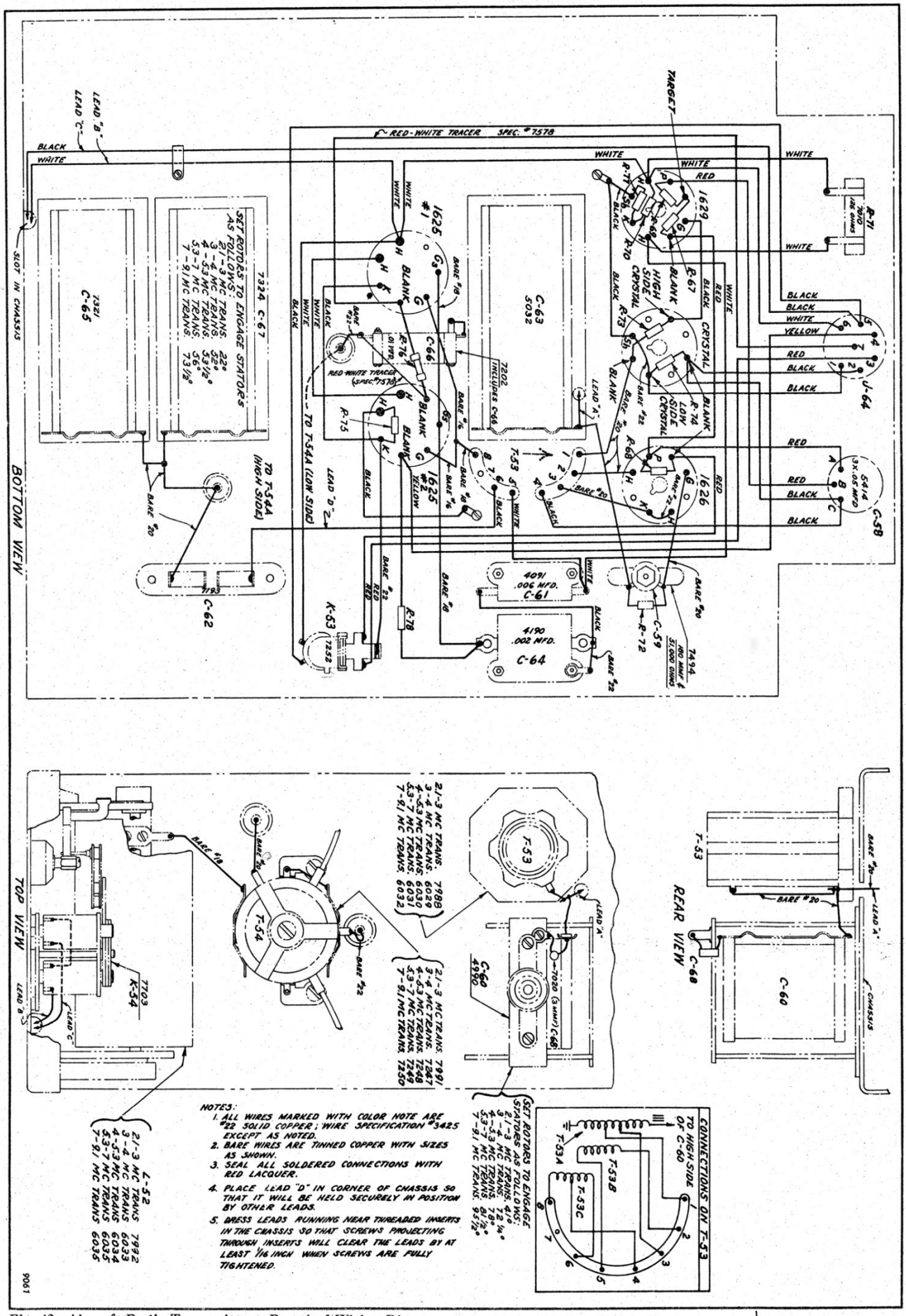

Fig. 42--Aircraft Radio Transmitters, Practical Wiring Diagram

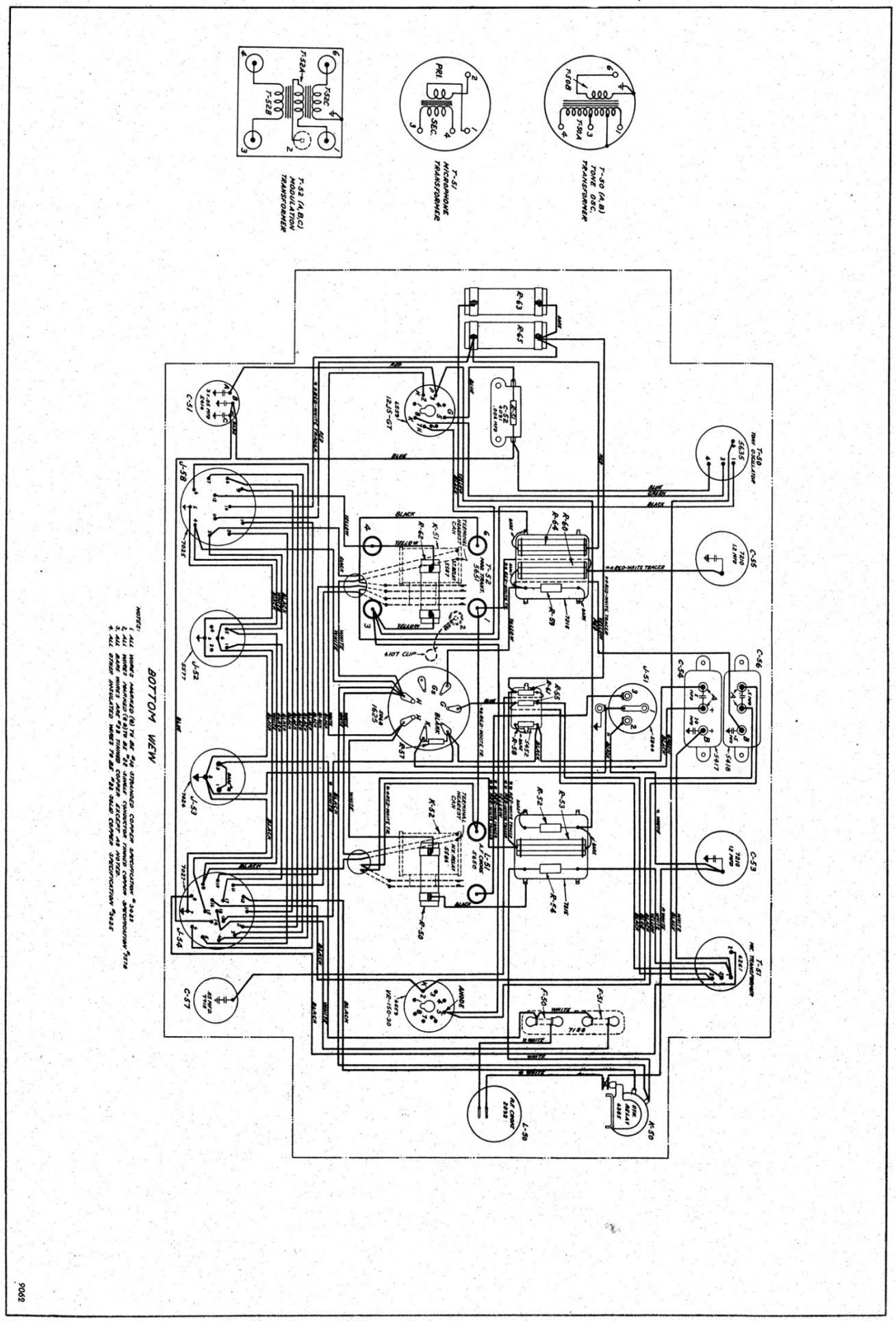

Fig. 43—Type CBY-50083 Modulator Unit, Practical Wiring Diagram

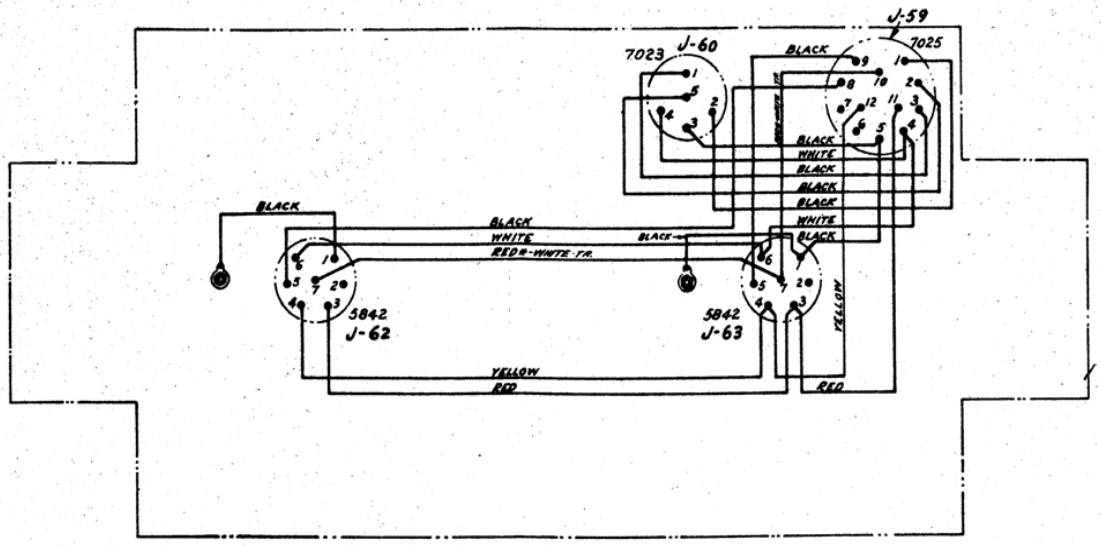

VIEW FROM REAR OF UNIT

NOTES:
1. ALL WIRES MARKED (A) TO BE #22 SOLID COPPER, SPEC. #7578.
2. ALL OTHER WIRES TO BE #22 SOLID COPPER, SPEC. #3425.
3. SEAL ALL SOLDERED CONNECTIONS WITH RED LACQUER, SPEC. #4593

TYPE CBY-52212 TRANSMITTER RACK
(2 UNIT)

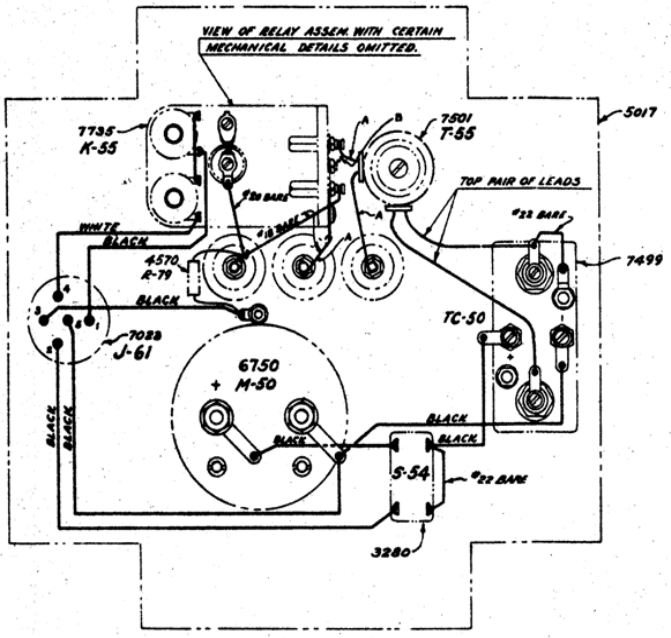

VIEW FROM REAR OF UNIT

NOTES:
1. LEADS MARKED "A" MUST BE SO DRESSED AS TO MAINTAIN AT LEAST 5/16" CLEARANCE TO OTHER CONDUCTORS AND TO GROUNDED PARTS, EXCEPT THAT GAP "B" NEED NOT EXCEED 1/8"
2. SOLDER TERMINATION OF BARE LEADS "A" MUST BE SMOOTHLY ROUNDED TO AVOID ALL SHARP PROJECTIONS, BARE LEADS MUST NOT BE MARRED IN SUCH A WAY AS TO LEAVE SHARP EDGES OR POINTS.
3. ALL LEADS INDICATED BY COLOR ARE #22 SOLID WIRE (SPEC. #3425)
4. PAINT ALL SOLDERED CONNECTIONS WITH RED LACQUER (SPEC # 4693)
5. AFTER WIRING IS COMPLETED, APPLY A HEAVY COAT OF G.E. GLYPTOL #1202 LACQUER OVER COIL TURNS AND INSULATORS OF COIL ASSEMBLY 7501.

TYPE CBY-29125 ANTENNA RELAY UNIT

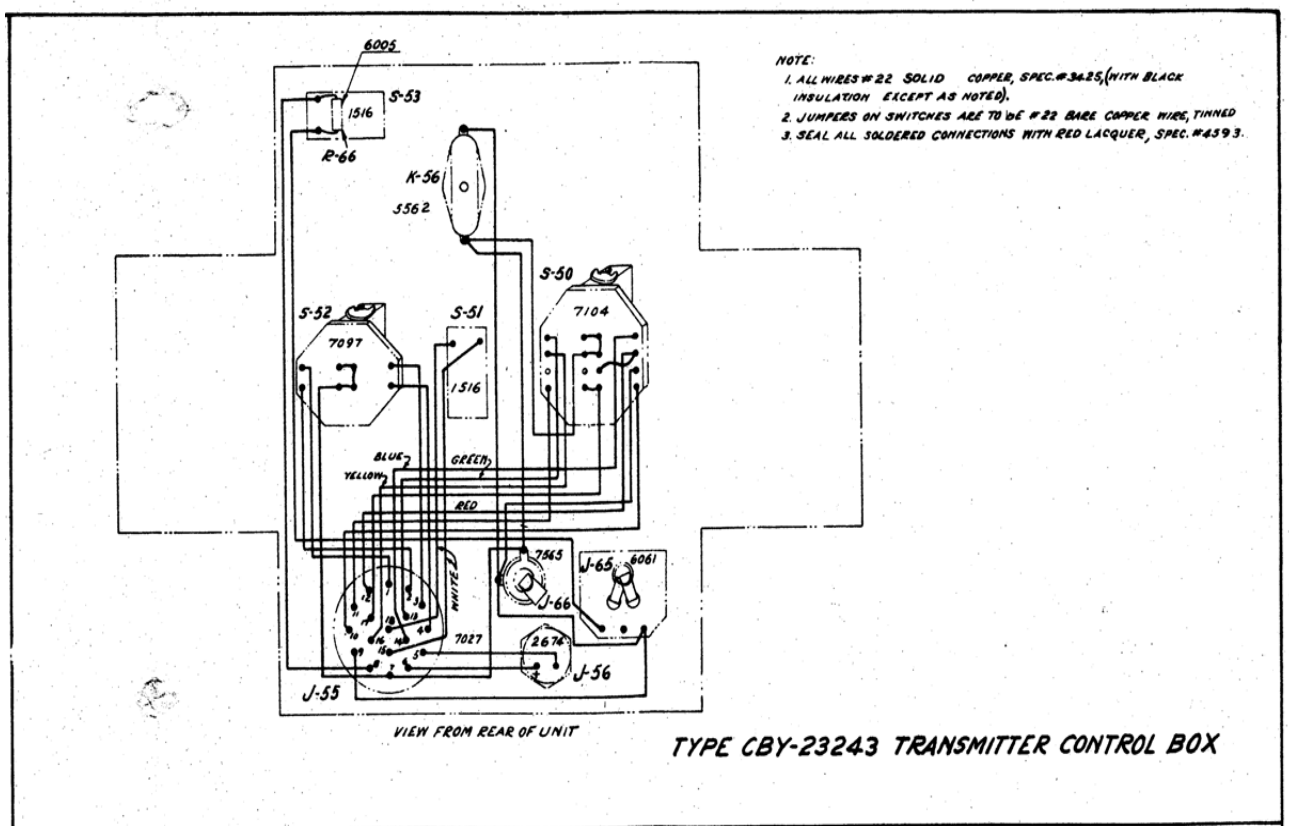

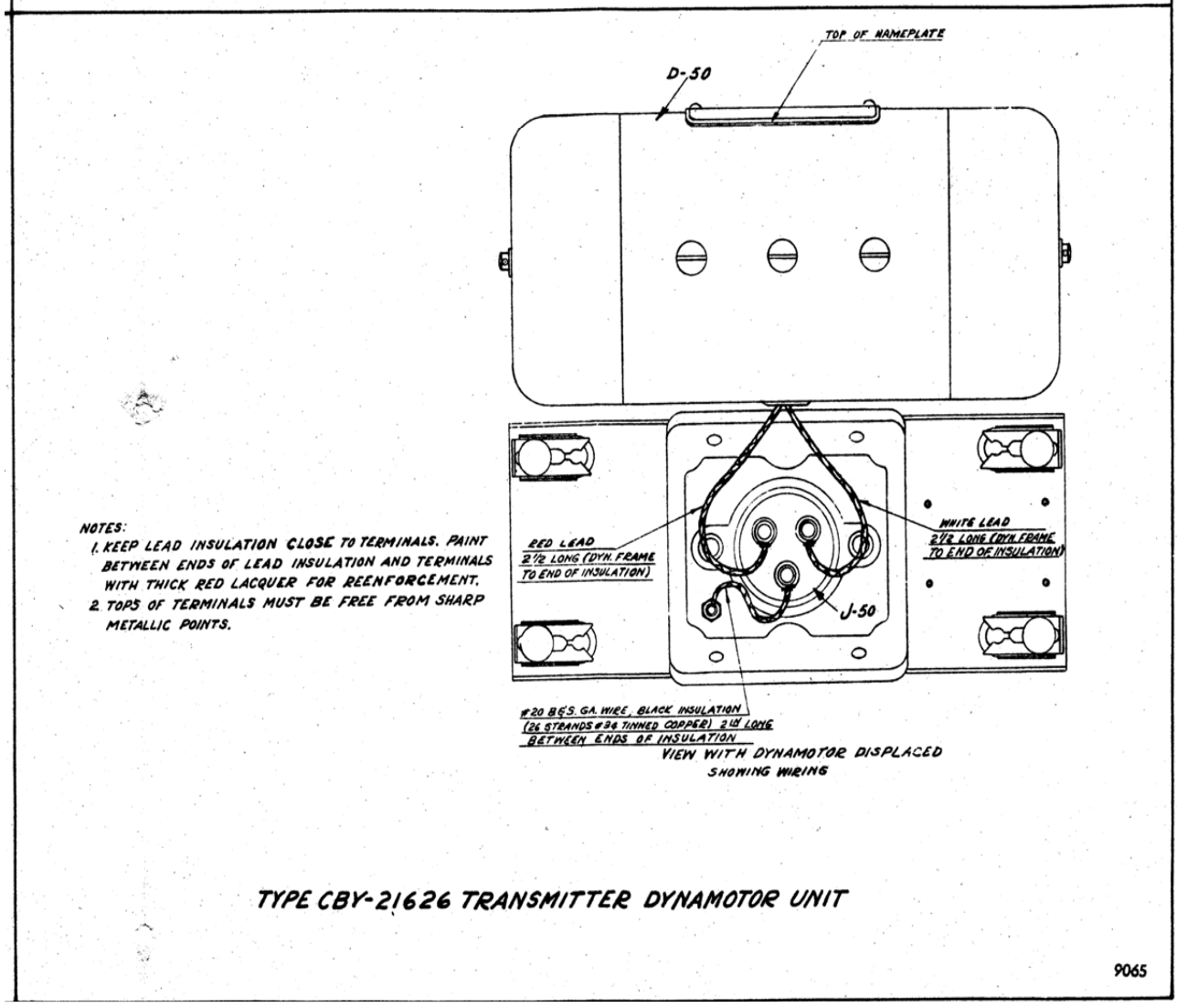

Fig. 44—Type CBY-52212 Transmitter Rack (2-unit), Type CBY-23243 Transmitter Control Box, Type CBY-29125 Antenna Relay Unit, and Type CBY-21626 Transmitter Dynamotor Unit, Practical Wiring Diagrams

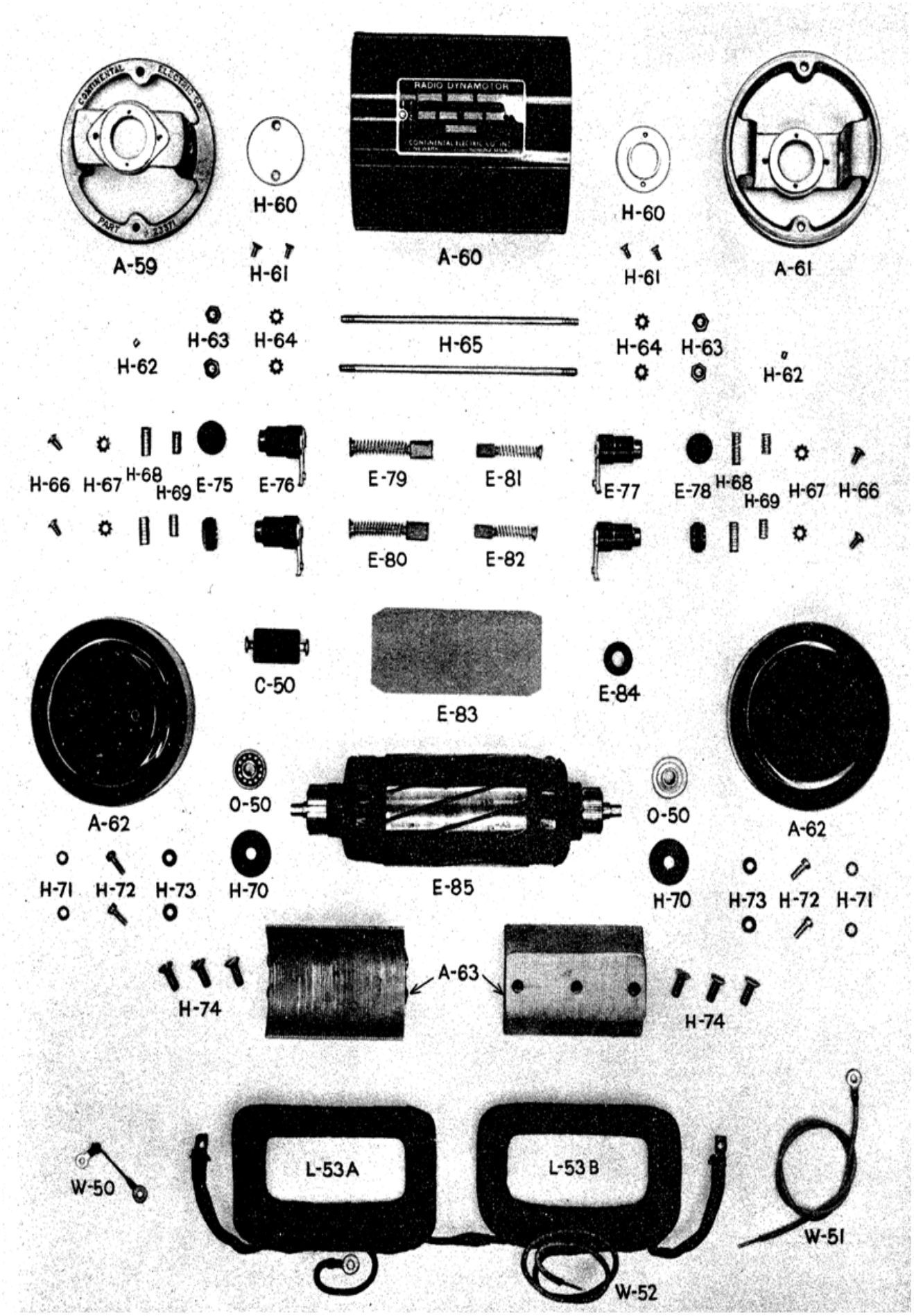
A-59
H-60
H-61
A-60
H-60
H-61
A-61
H-62
H-63
H-64
H-65
H-64
H-63
H-62
H-66
H-67
H-68
H-69
E-75
E-76
E-79
E-81
E-77
E-78
H-68
H-69
H-67
H-66
E-80
E-82
C-50
E-83
E-84
A-62
O-50
E-85
O-50
A-62
H-71
H-72
H-73
H-70
H-70
H-73
H-72
H-71
H-74
A-63
H-74
W-50
L-53A
L-53B
W-51
W-52

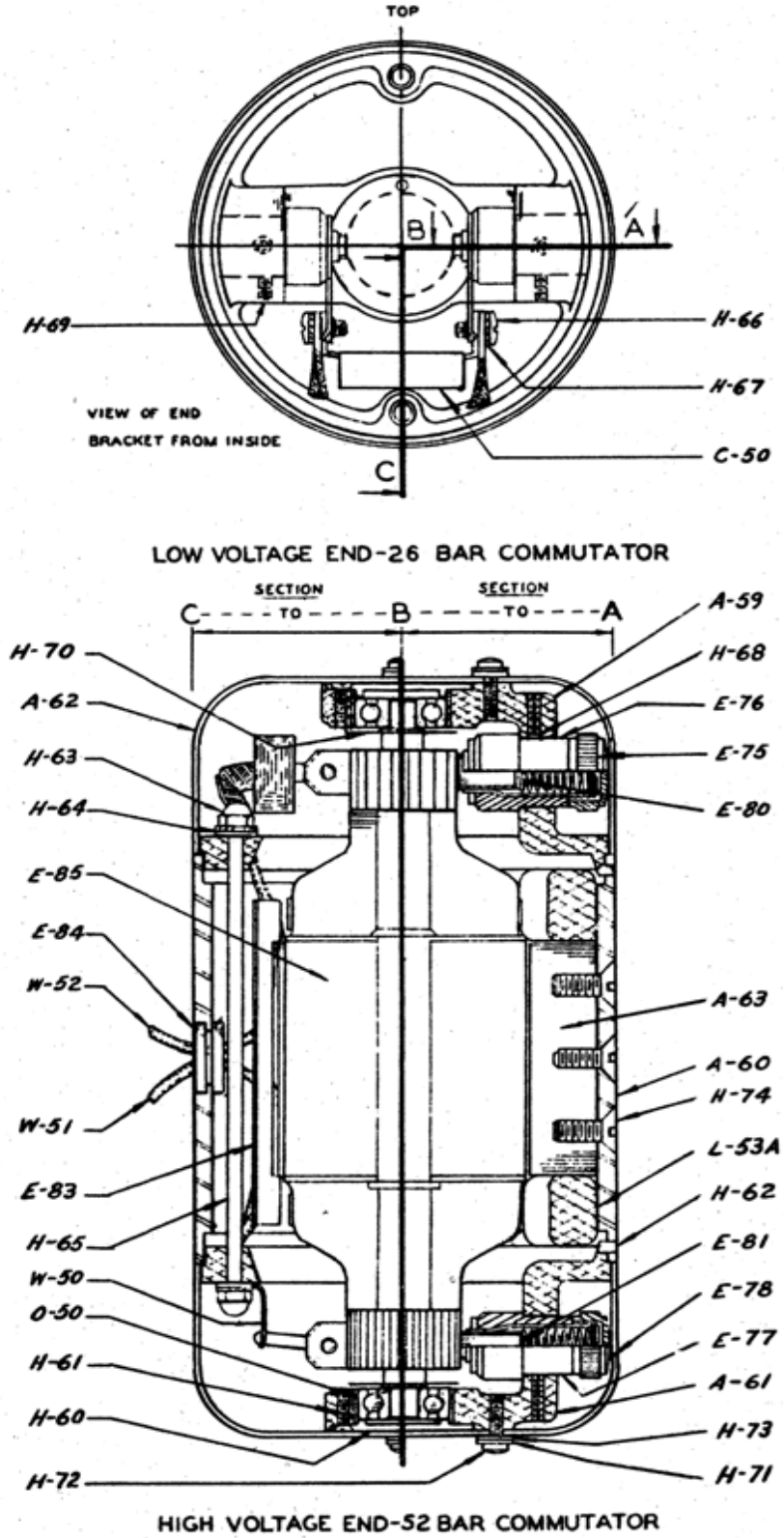

Fig. 45—Photograph of Parts, and Line Drawing of Dynamotor Machine Used in Type CBY-21626 Transmitter Dynamotor Unit