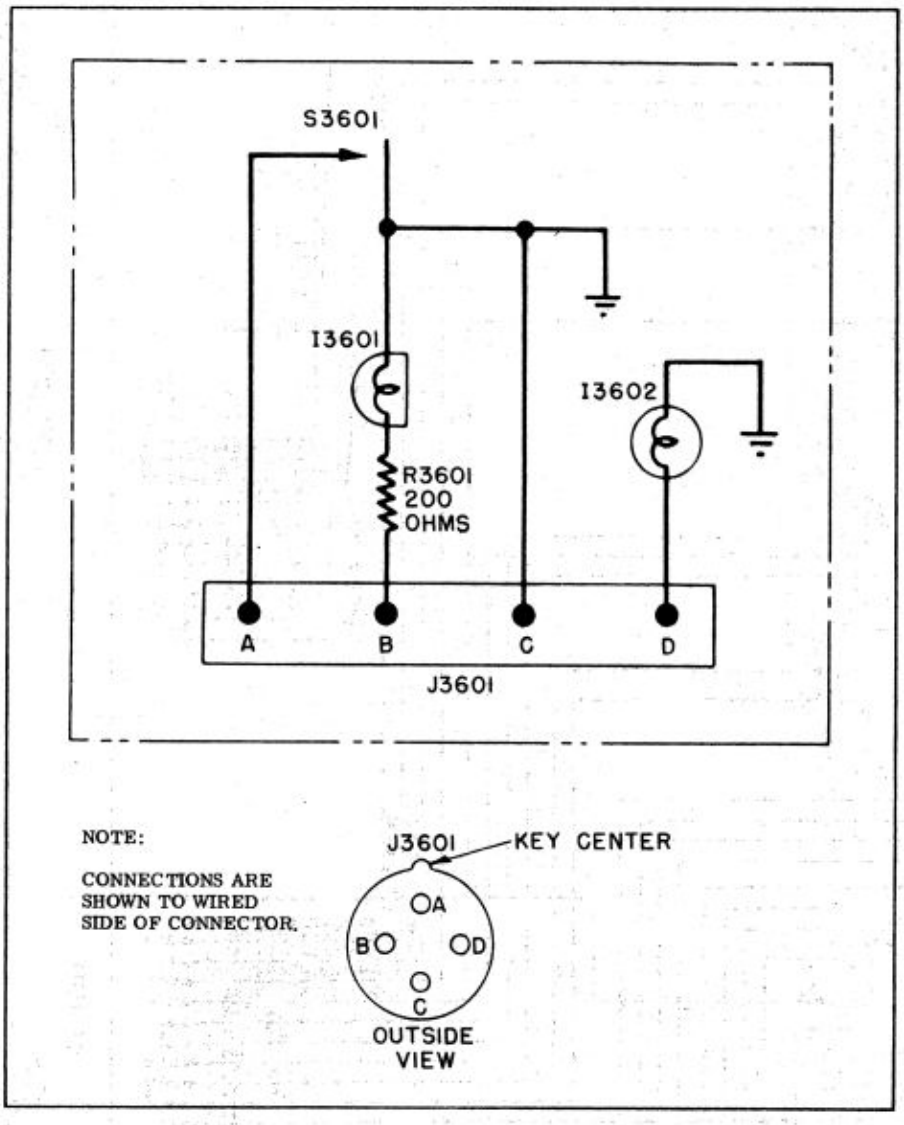

Figure 4-37. Control Unit ARC Type C-50, Schematic Diagram

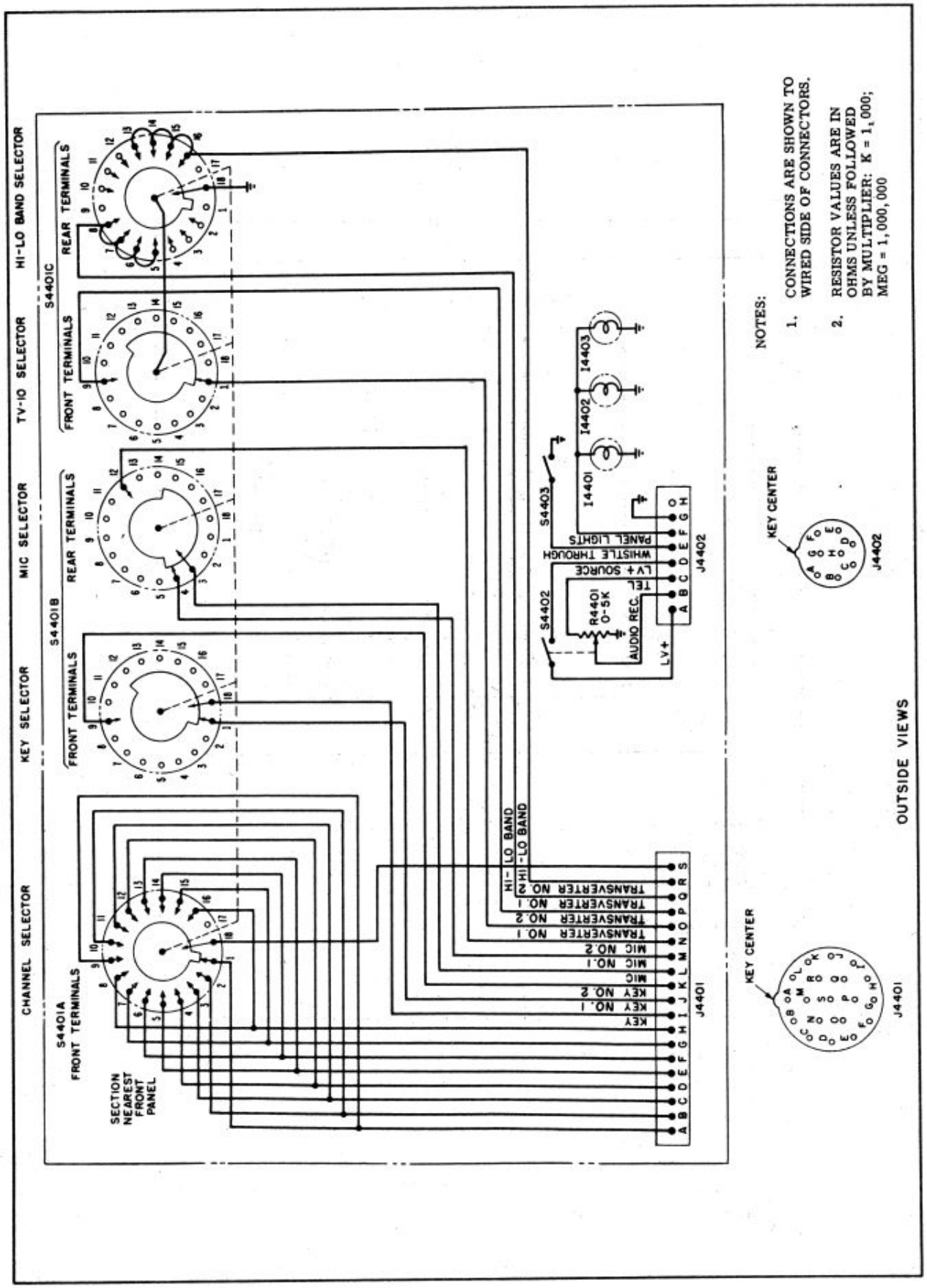

Figure 4-38. Control Unit ARC Type C-52, Schematic Diagram

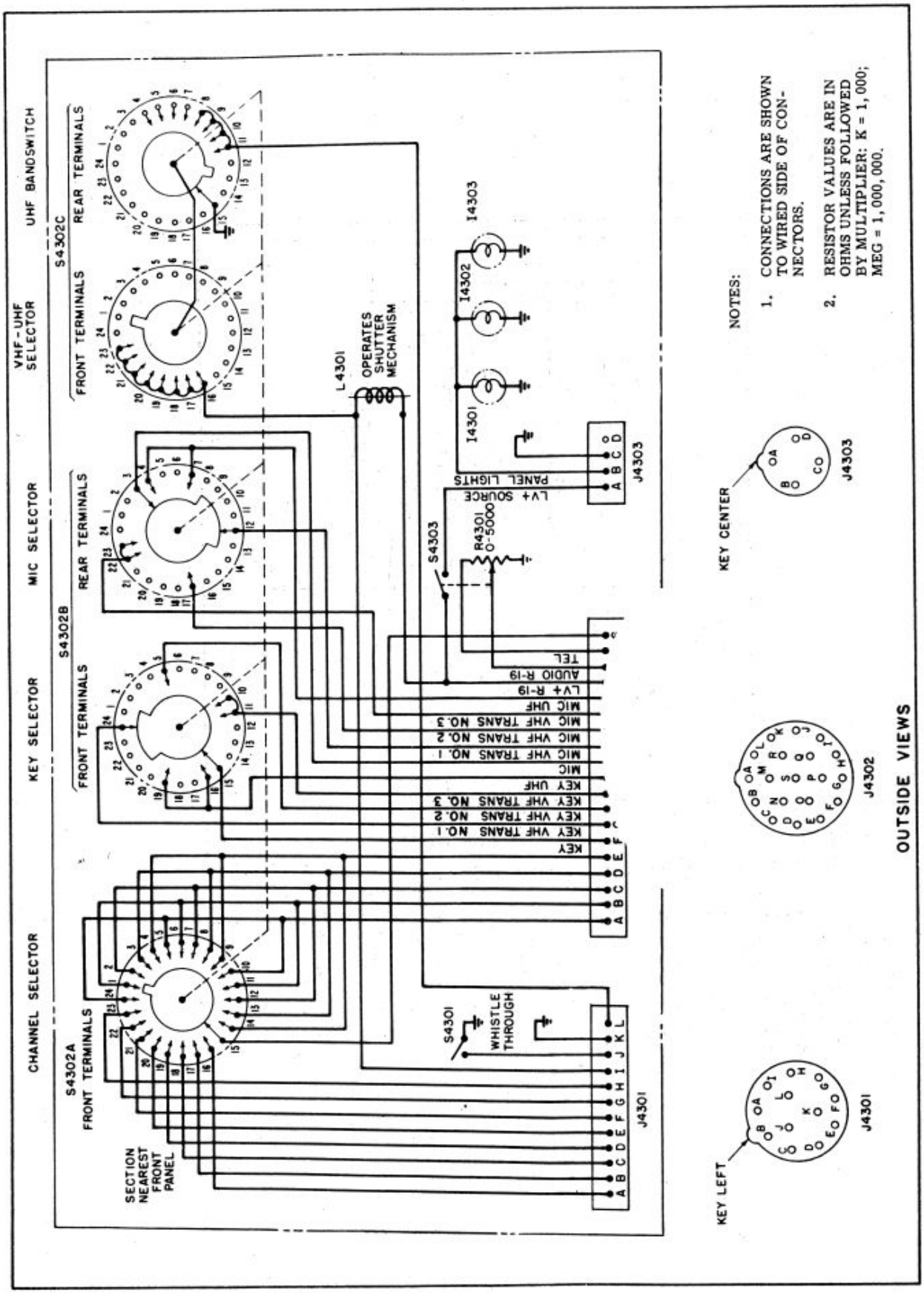

Figure 4-39. Control Unit ARC Type C-53, Schematic Diagram

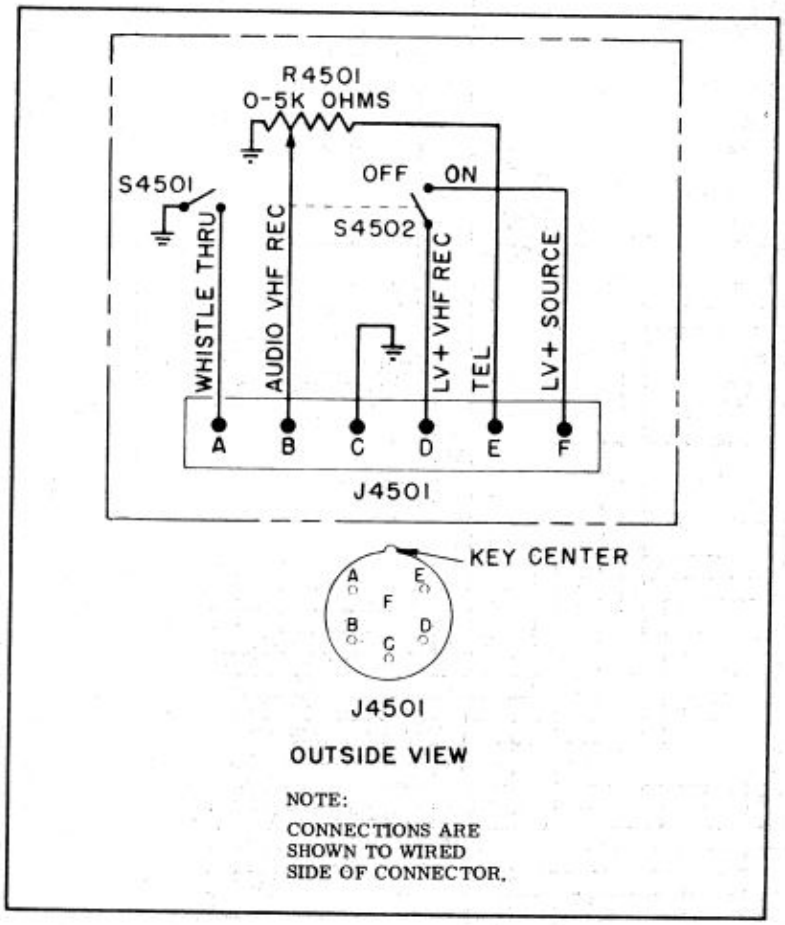

Figure 4-40. Control Units ARC Type C-54 and C-55, Schematic Diagram

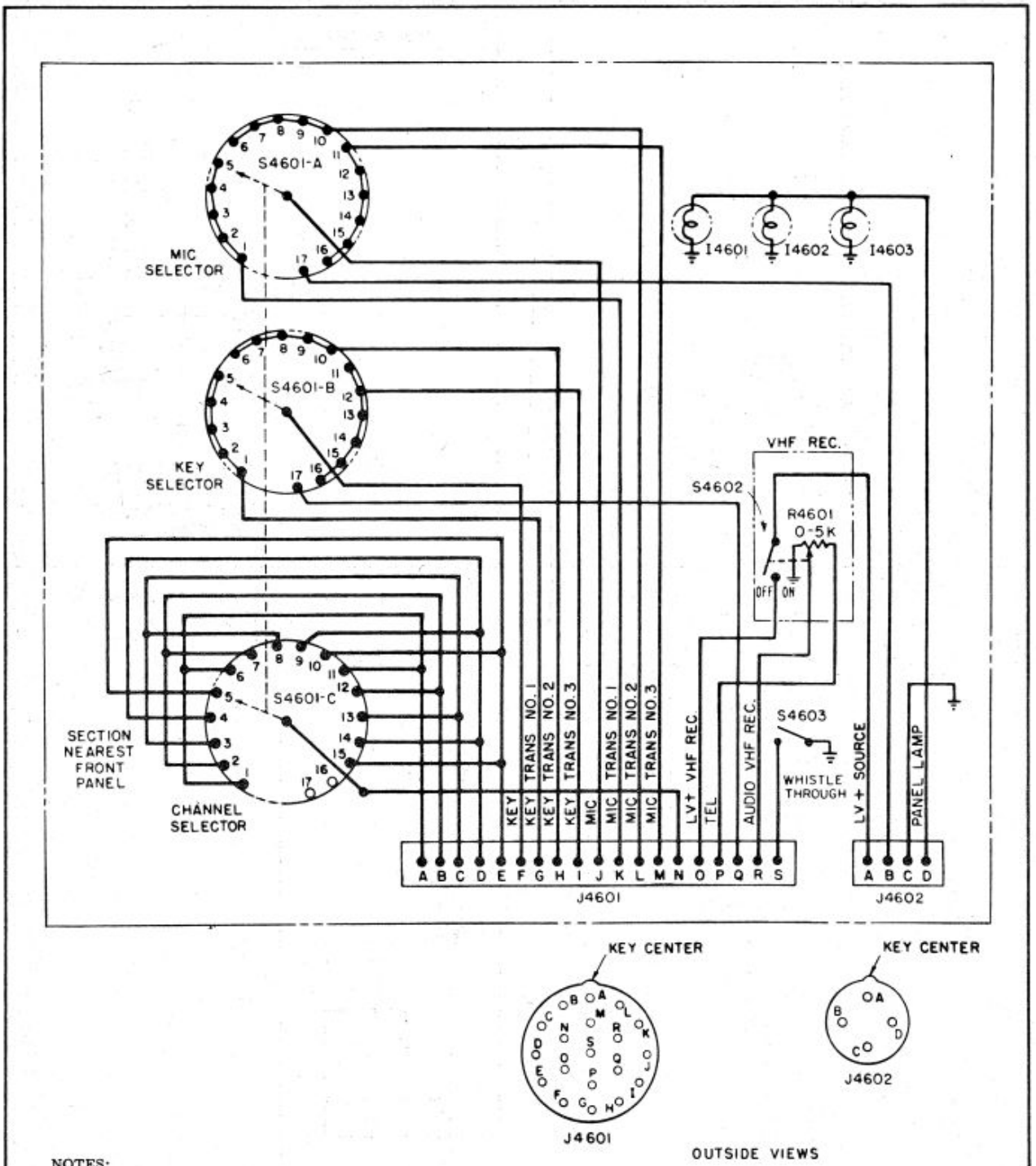

NOTES:

1. CONNECTIONS ARE SHOWN TO WIRED SIDE OF CONNECTORS.
2. RESISTOR VALUES ARE IN OHMS UNLESS FOLLOWED BY MULTIPLIER: K = 1,000; MEG = 1,000,000.
3. ROTARY SWITCH SECTIONS ARE SHOWN AS VIEWED FROM KNOB END OF SWITCH.

Figure 4-41. Control Unit ARC Type C-56, Schematic Diagram

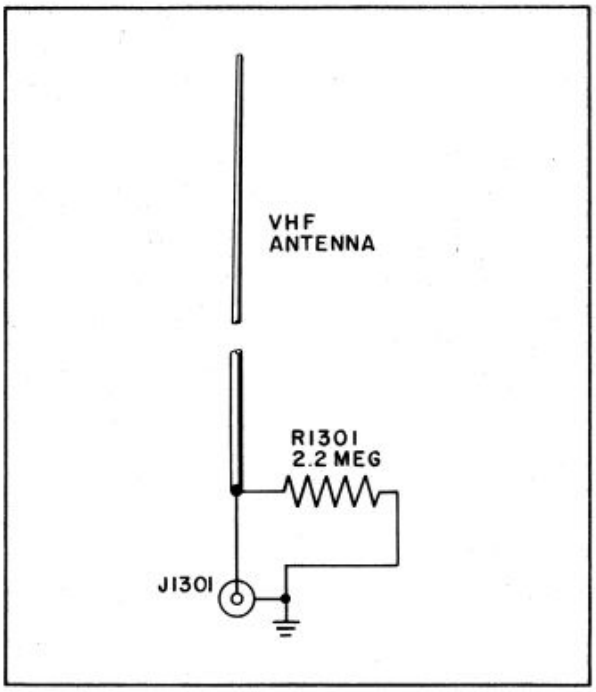

Figure 4-42. Antenna ARC Type A-12, Schematic Diagram

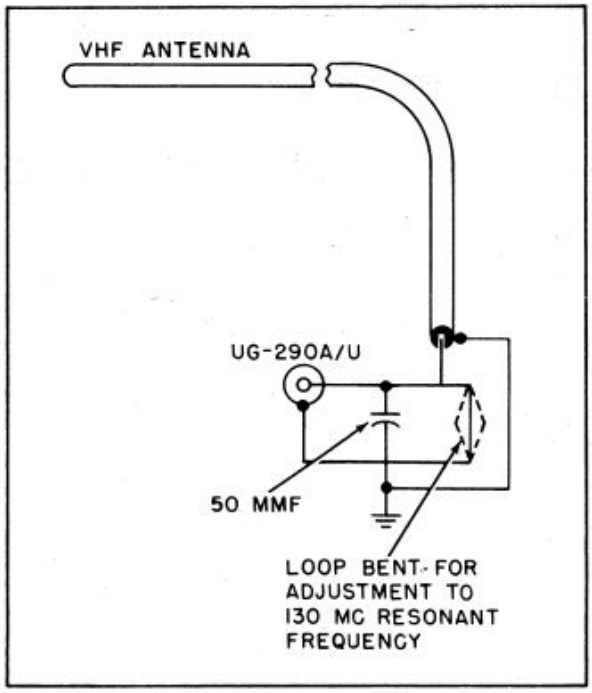

Figure 4-43. Antenna ARC Type A-15, Schematic Diagram

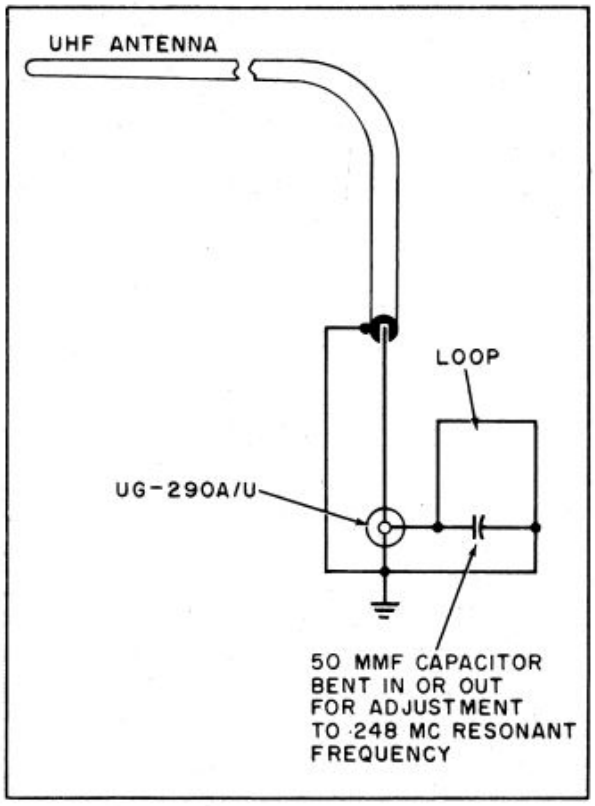

Figure 4-44. Antenna ARC Type A-16, Schematic Diagram

NOTES:

1. CONNECTIONS ARE SHOWN TO WIRED SIDE OF CONNECTORS.

2. ALL RELAYS ARE SHOWN UNENERGIZED.

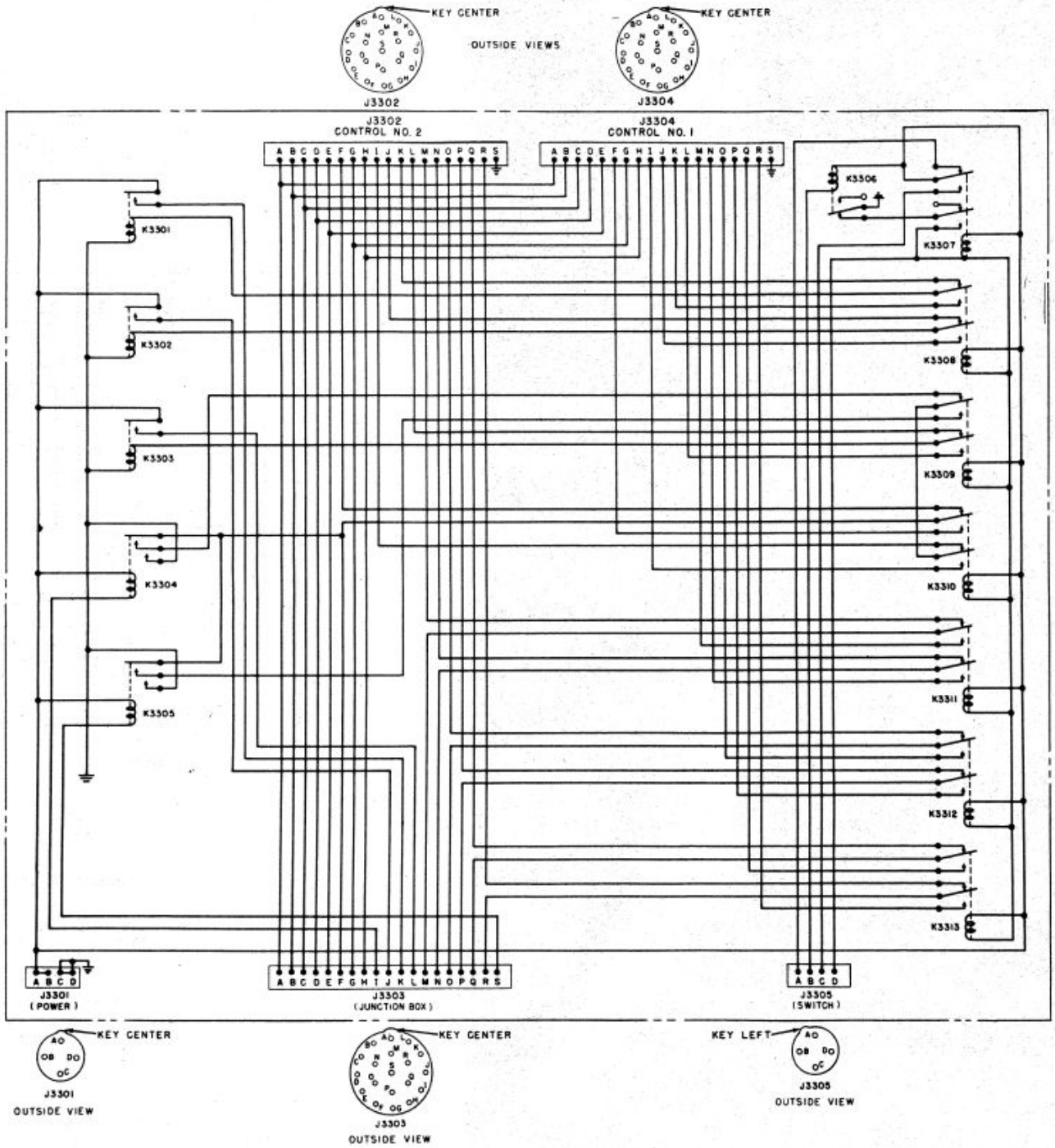

Figure 4-45. Relay Unit ARC Type K-12, Schematic Diagram

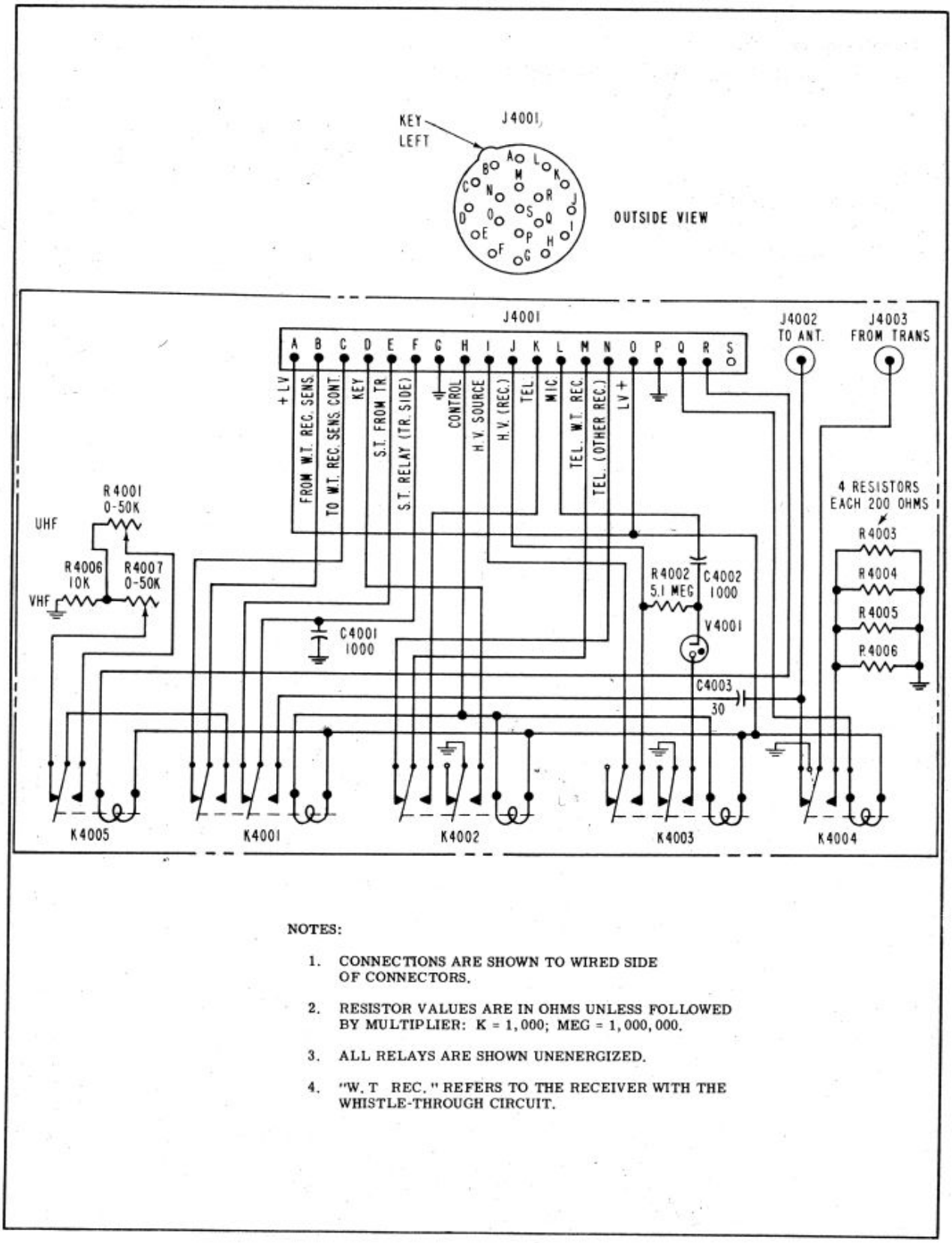

NOTES:

1. CONNECTIONS ARE SHOWN TO WIRED SIDE OF CONNECTORS.
2. RESISTOR VALUES ARE IN OHMS UNLESS FOLLOWED BY MULTIPLIER: K = 1,000; MEG = 1,000,000.
3. ALL RELAYS ARE SHOWN UNENERGIZED.
4. "W.T REC." REFERS TO THE RECEIVER WITH THE WHISTLE-THROUGH CIRCUIT.

Figure 4-46. Oscillator-Relay Unit ARC Type K-13, Schematic Diagram

AG 413.44 (4 Mar 58)

By Order of *Wilber M. Brucker,* Secretary of the Army:

MAXWELL D. TAYLOR,
General, United States Army,
Chief of Staff.

Official:
HERBERT M. JONES,
Major General, United States Army,
The Adjutant General.

Distribution:
Active Army:

ASA	USATC	USA Sig Eqp Spt Agcy
CNGB	Ft & Camp	USA White Sands Sig Agcy
Technical Stf, DA	Svc Colleges	Yuma Test Sta
Technical Stf Bd	Br Svc Sch	USA Elct PG
USA Arty Bd	Gen Depots	Sig Fld Maint Shops
USA Armor Bd	Sig Sec, Gen Depots	Sig Lab
USA Inf Bd	Sig Depots	Mil Dist
USA Air Def Bd	Fld Comd, AFSWP	JBUSMC
USA Abn & Elct Bd	Engr Maint Cen	Units organized under following TOE's:
USA Avn Bd	Army Pictorial Cen	11-7
USA Armor Bd Test Sec	WRAMC	11-16
USA Air Def Bd Test Sec	AFIP	11-57
USA Arctic Test Bd	AMS	11-127
USCONARC	Port of Emb (OS)	11-128
USARADCOM	Trans Terminal Comd	11-500 (AA-AE)
OS Maj Comd	Army Terminals	11-557
Log Comd	OS Sup Agcy	11-587
MDW	USA Sig Pub Agcy	11-592
Armies	USA Sig Comm Engr Agcy	11-597
Corps	USA Comm Agcy	
Div	TASSA	

NG: State AG; units—same as Active Army.
USAR: None.
For explanation of abbreviations used, see AR 320-50.

☆ U.S. GOVERNMENT PRINTING OFFICE: 1959 O - 511507